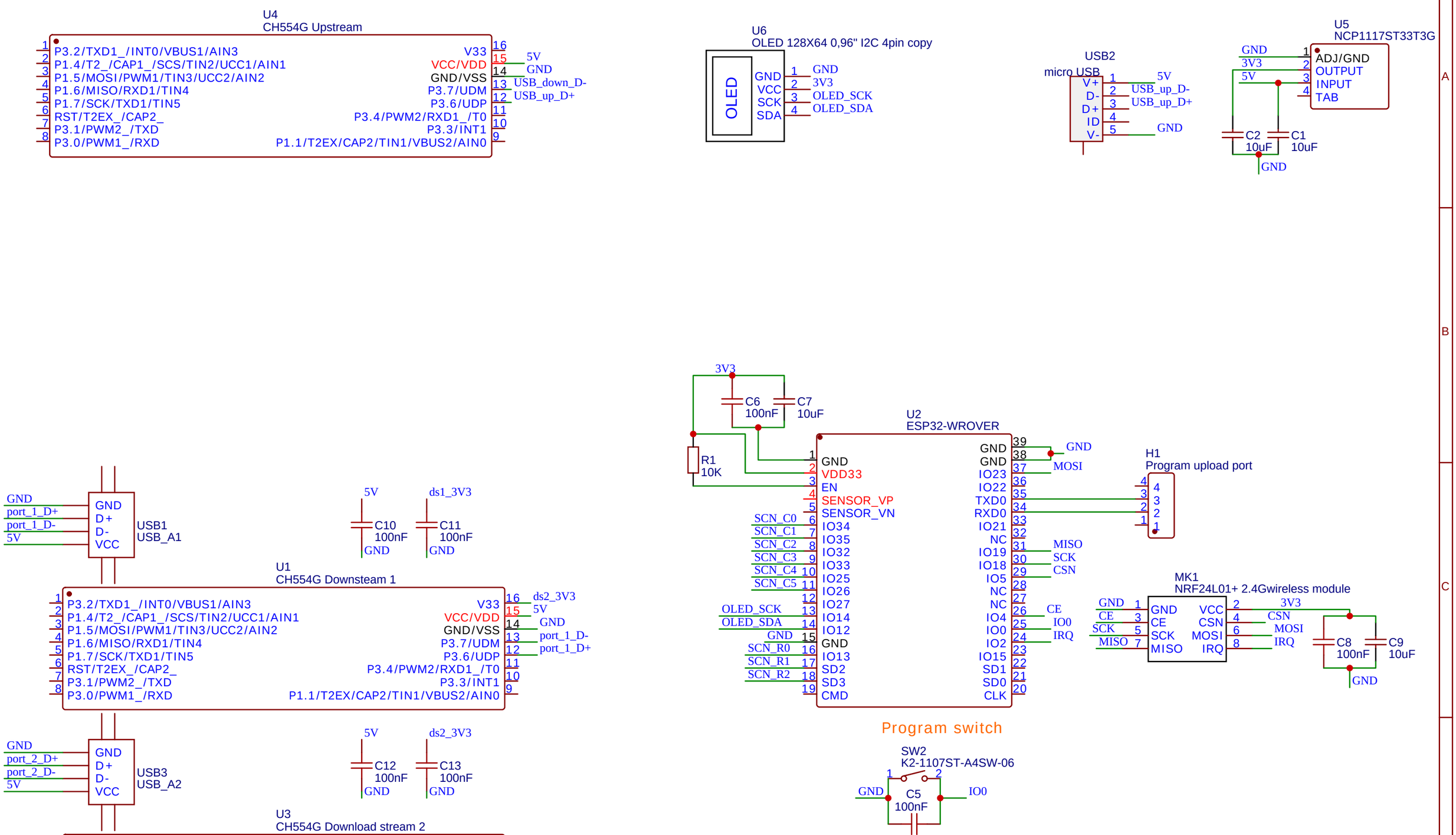

TITLE: Firestarter	REV: 1.0
Company: Firestarter	Sheet: 1/1
Date: 2019-08-10 Drawn By: Roy Cai	

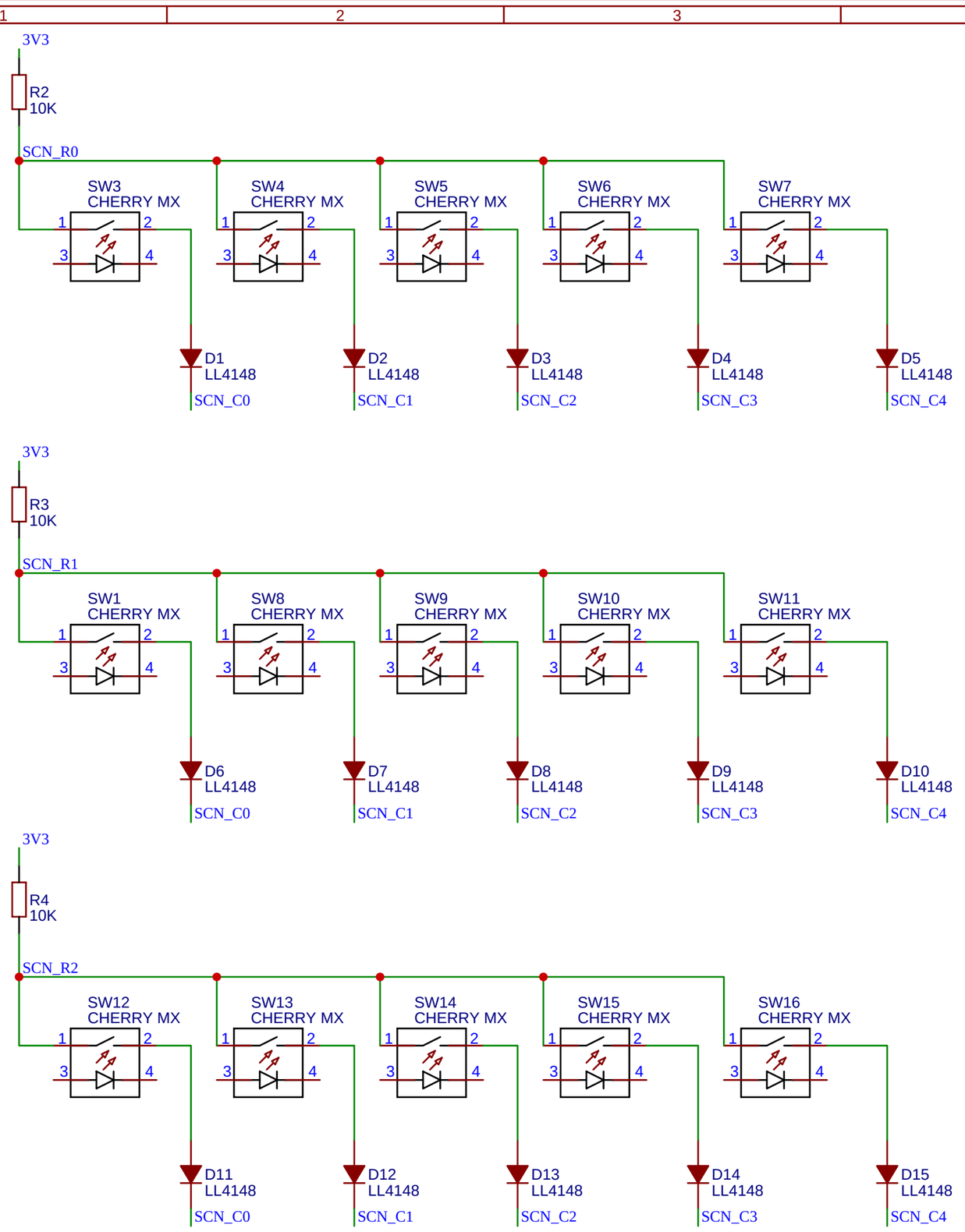

TITLE: Key_matrix	REV: 1.0
Company: Firestarter	Sheet: 1/1
Date: 2019-08-11 Drawn By: lcve	