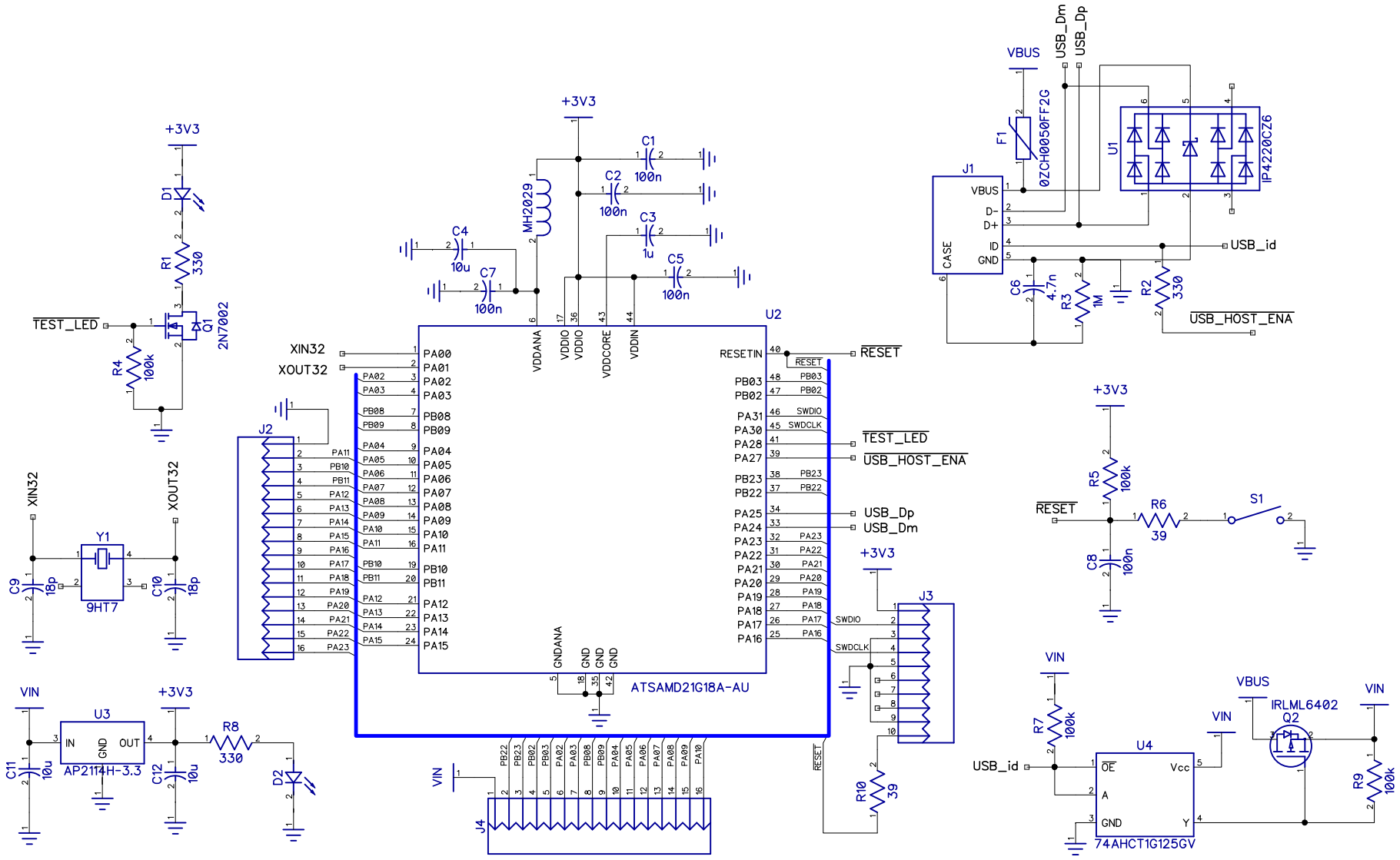
+3V3
D1
R1
330
TEST_LED
Q1
2N7002
R4
100k
XIN32
XOUT32
Y1
9HT7
C9
18p
C10
18p
VIN
U3
IN
GND
OUT
AP2114H-3.3
C11
10u
C12
10u
R8
330
D2
J2
J4
MH2029
C1
100n
C2
100n
C3
1u
C4
10u
C5
100n
C7
100n
U2
ATSAMD21G18A-AU
VDDANA
VDDIO
VDDCORE
VDDIN
GNDANA
RESETIN
RESET
TEST_LED
USB_HOST_ENA
USB_Dp
USB_Dm
SWDIO
SWDCLK
J3
R10
39
VBUS
USB_Dm
USB_Dp
F1
0ZCH0050FF2G
J1
CASE
D-
D+
ID
GND
U1
IP4220CZ6
USB_id
C6
4.7n
R3
1M
R2
330
USB_HOST_ENA
R5
100k
R6
39
S1
C8
100n
R7
100k
U4
OE
A
Vcc
Y
74AHCT1G125GV
IRLML6402
Q2
R9
100k