电源

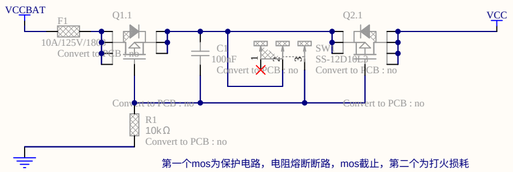

第一个mos为保护电路，电阻熔断断路，mos截止，第二个为打火损耗

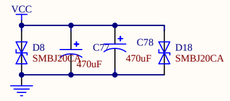

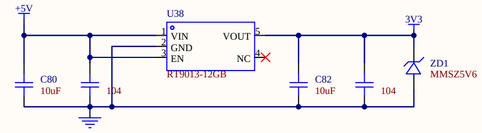

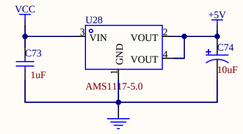

MCU

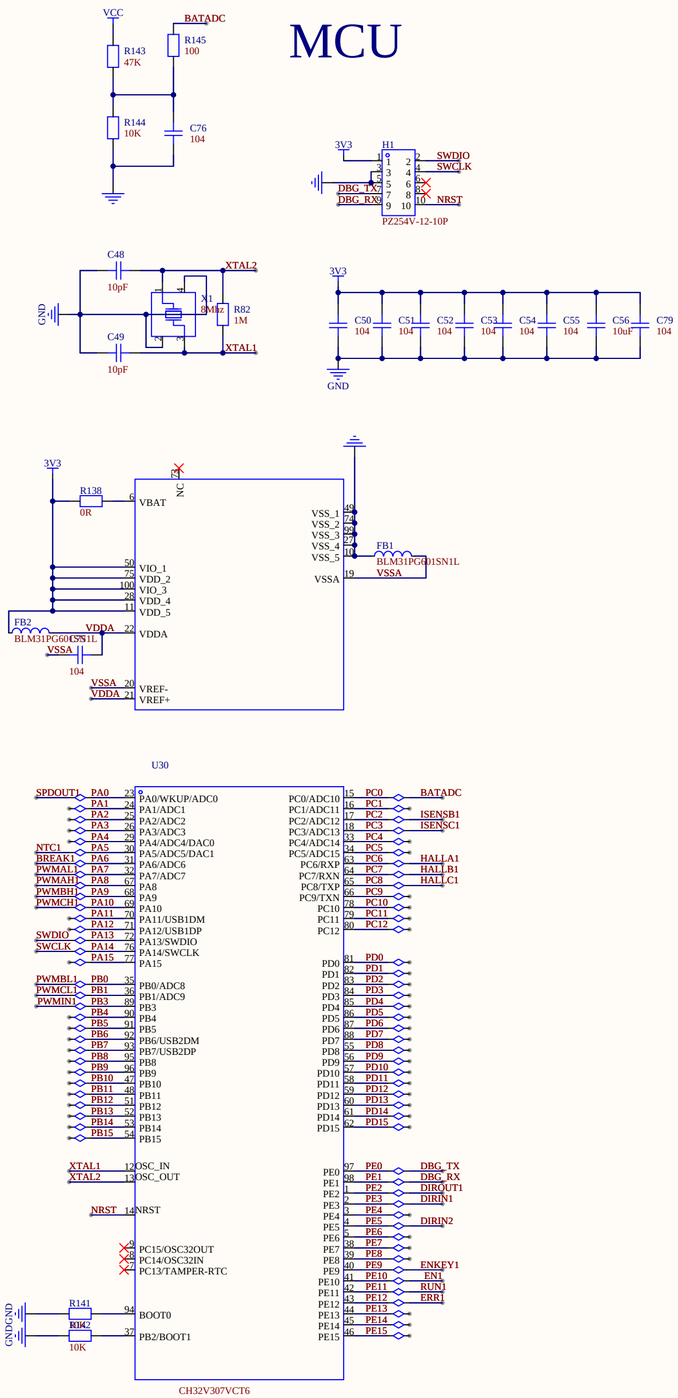

FOC及保护电路

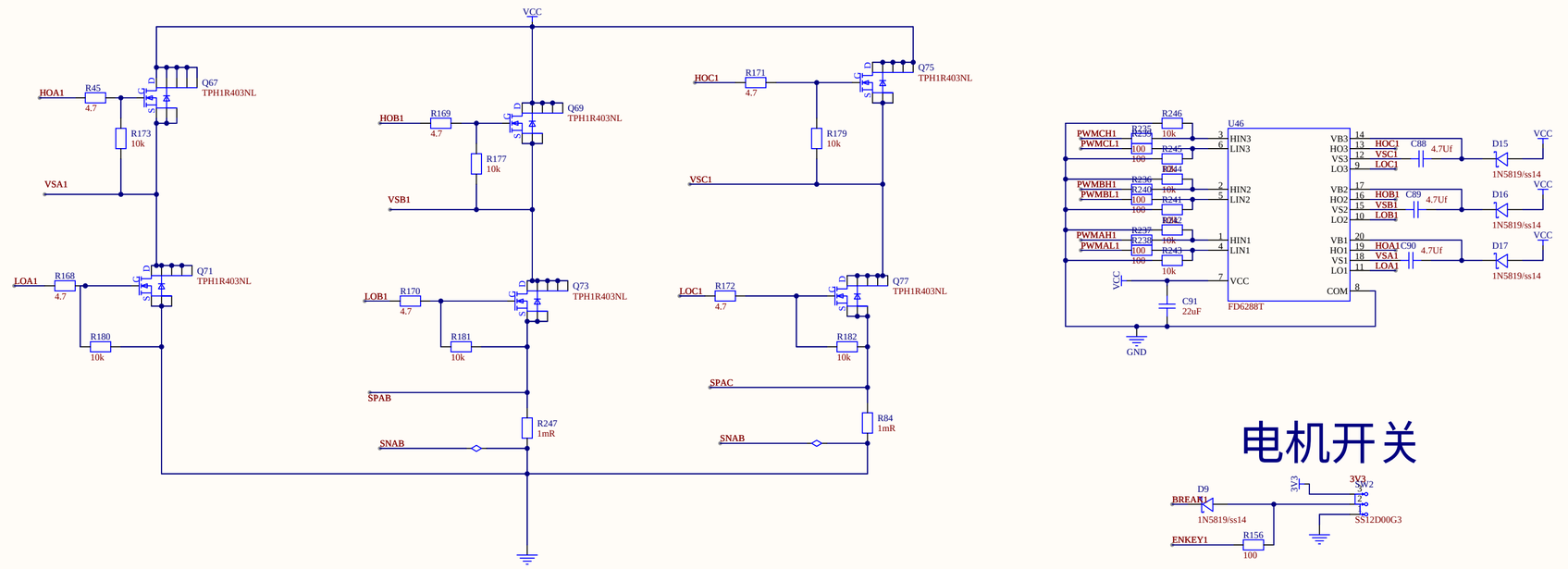

电机开关

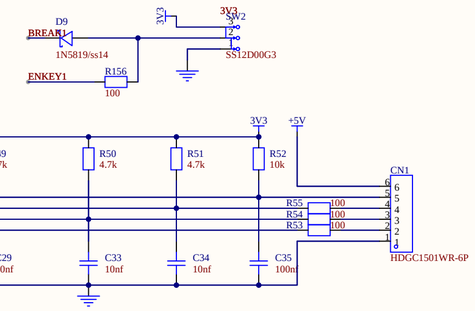

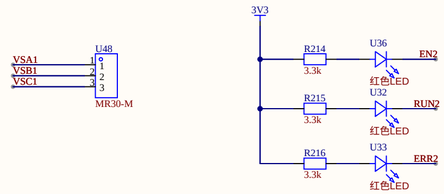

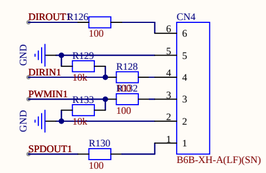

GAIN=(30k/1k+1)/(510/30k+1)=30.4818

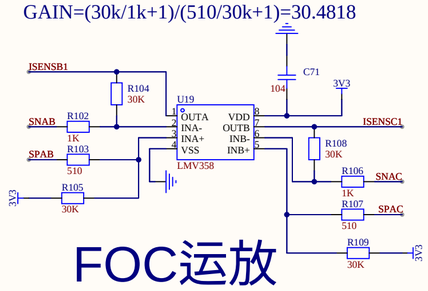

FOC运放

Schematic	Schematic1	Update Date	2026-04-15
		Create Date	2026-03-29
Page	P1	Part Number	
Drawed	FOC		
Reviewed			
	VER	SIZE	PAGE 1 OF 1
嘉立创EDA	V1.0	A4	嘉立创EDA