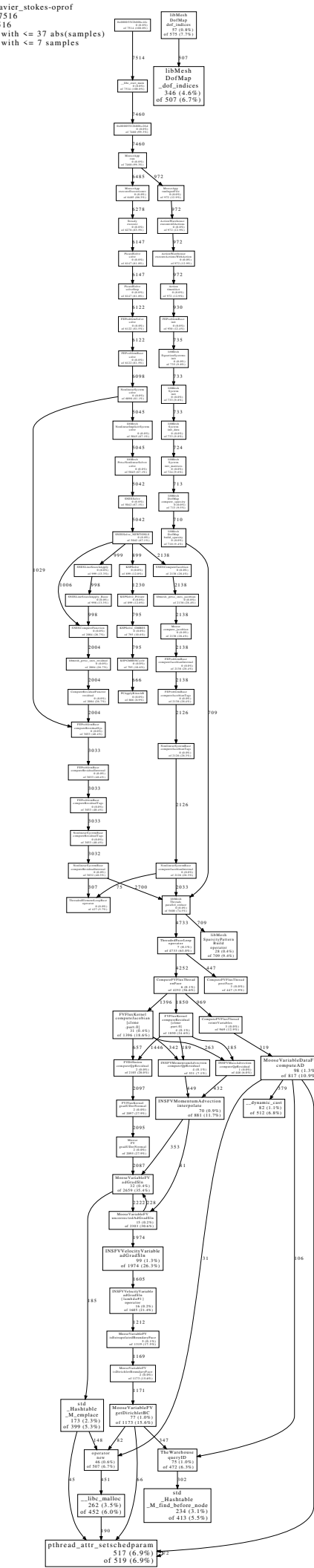../../../../../../navier_stokes-oprof
Total samples: 7516
Focusing on: 7516
Dropped nodes with <= 37 abs(samples)
Dropped edges with <= 7 samples