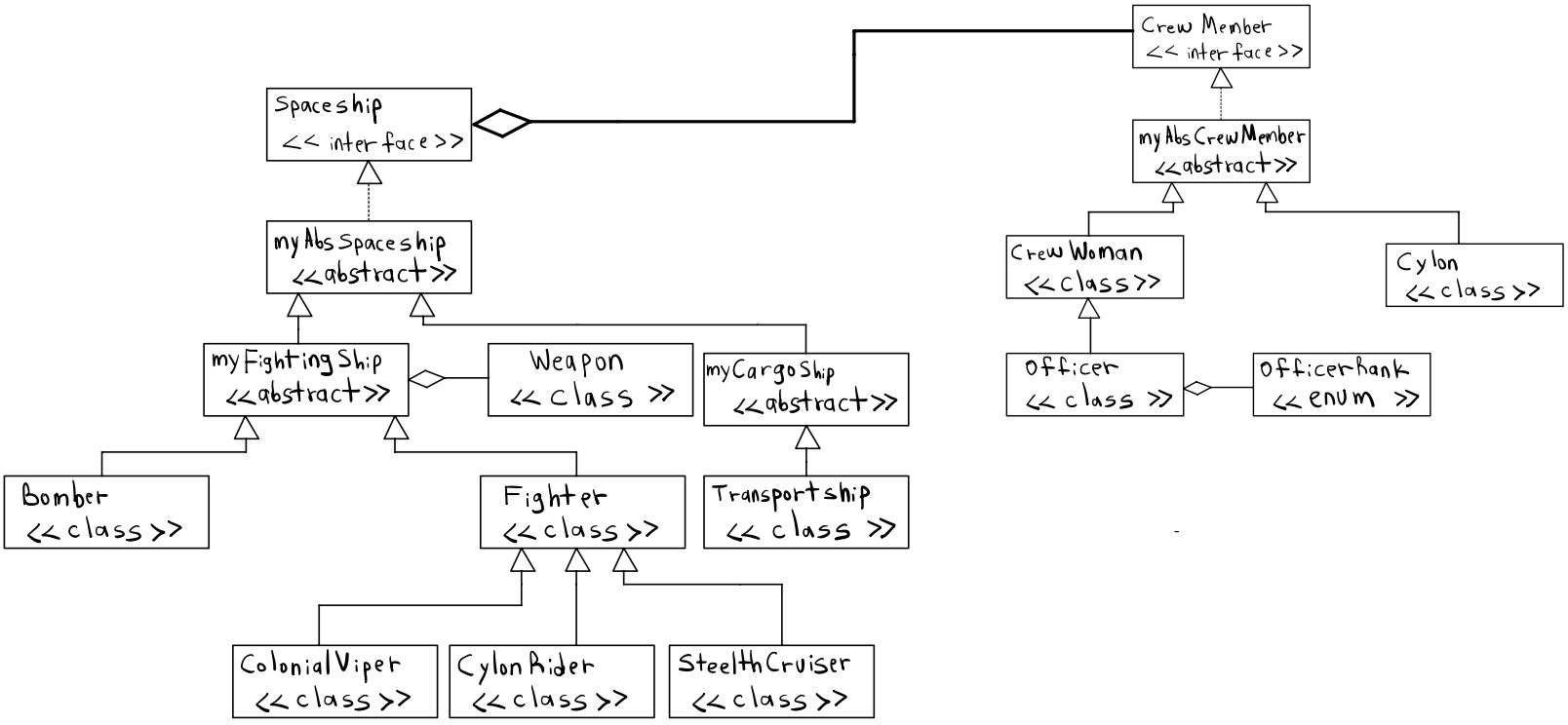
Crew Member
<< interface >>
Spaceship
<< interface >>
myAbsCrewMember
<<abstract>>
myAbsSpaceship
<<abstract>>
CrewWoman
<<class>>
Cylon
<<class>>
myFightingShip
<<abstract>>
Weapon
<< class >>
myCargoShip
<<abstract>>
Officer
<< class >>
OfficerRank
<< enum >>
Bomber
<<class>>
Fighter
<<class>>
Transportship
<< class >>
ColonialViper
<<class>>
CylonRider
<<class>>
SteelthCruiser
<<class>>