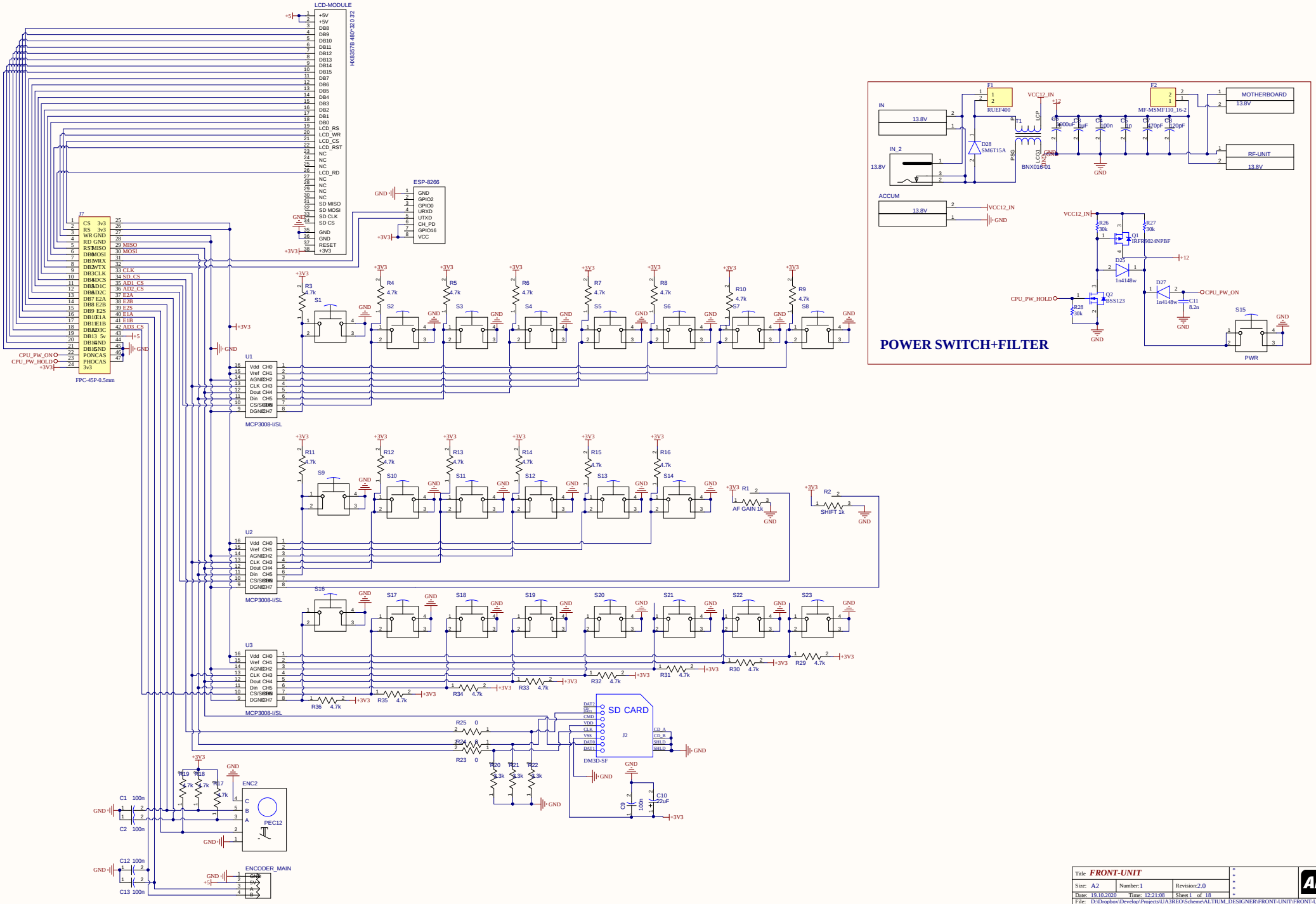

Title	FRONT-UNIT	
Size: A2	Number:1	Revision:2.0
Date: 19.10.2020	Time: 12:21:08	Sheet 1 of 18
File: D:\Dropbox\Develop\Projects\UA3REO\Scheme\ALTIUM_DESIGNER\FRONT-UNIT\FRONT-UNIT.SchDoc		

Altium

U_POWER
POWER.SchDoc

U_CLOCK_GENERATOR
CLOCK_GENERATOR.SchDoc

U_CONNECTIONS
CONNECTIONS.SchDoc

U_FPGA
FPGA.SchDoc

U_STM32
STM32.SchDoc

U_AUDIO CODEC
AUDIO CODEC.SchDoc

U_DAC
DAC.SchDoc

U_ADC
ADC.SchDoc

Title	MOTHERBOARD		
Size: A4	Number: 2	Revision: 2.0	
Date: 19.10.2020	Time: 12:21:08	Sheet 2 of 18	
File: D:\Dropbox\Develop\Projects\UA3REO\Scheme\ALTIUM_DESIGNER\MOTHERBOARD\MOTHERBOARD.SCHDOC			

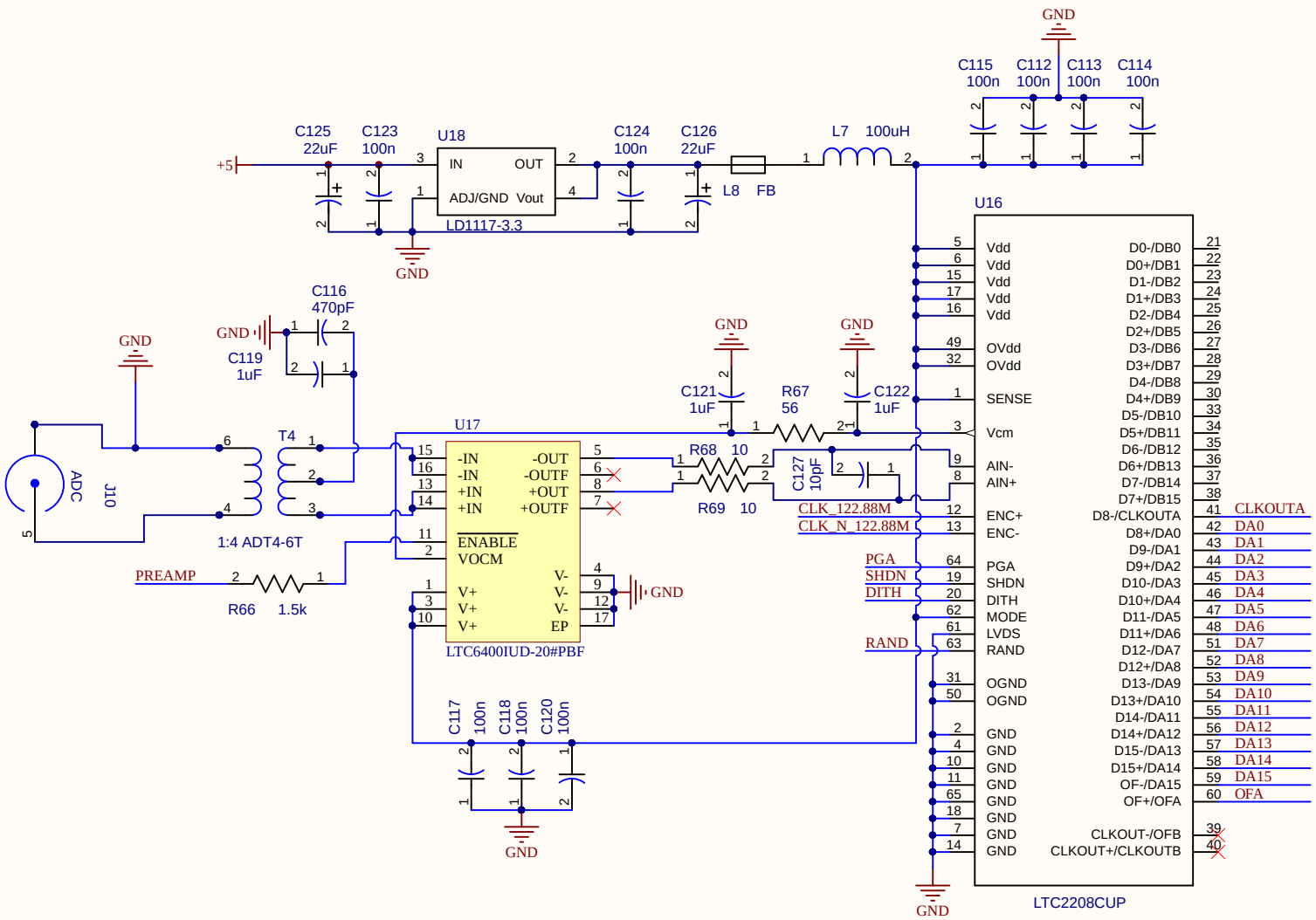

Title	ADC		
Size: A4	Number:3	Revision:2.0	
Date: 19.10.2020	Time: 12:21:09	Sheet 3 of 18	
File: D:\Dropbox\Develop\Projects\UA3REO\Scheme\ALTIUM_DESIGNER\MOTHERBOARD\ADC.SchDoc			

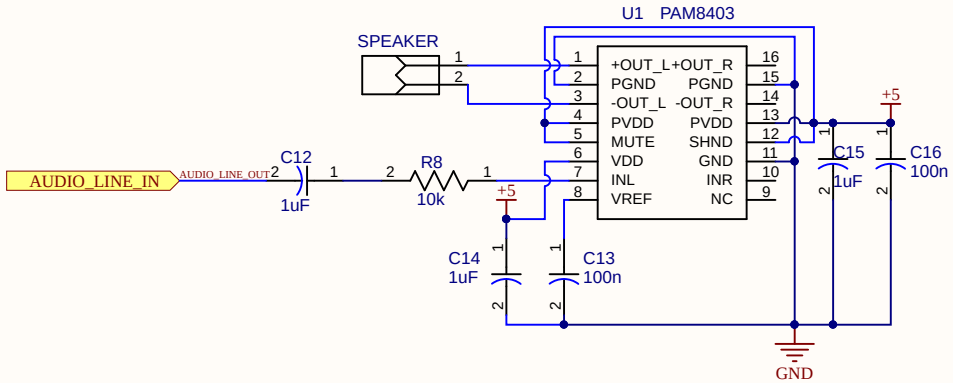

Title **AF AMP**			* UA3REO BH8CGJ * *
Size: A4	Number:4	Revision:2.0	
Date: 19.10.2020	Time: 12:21:09	Sheet 4 of 18	
File: D:\Dropbox\Develop\Projects\UA3REO\Scheme\ALTIUM_DESIGNER\MOTHERBOARD\AF AMP.SchDoc			

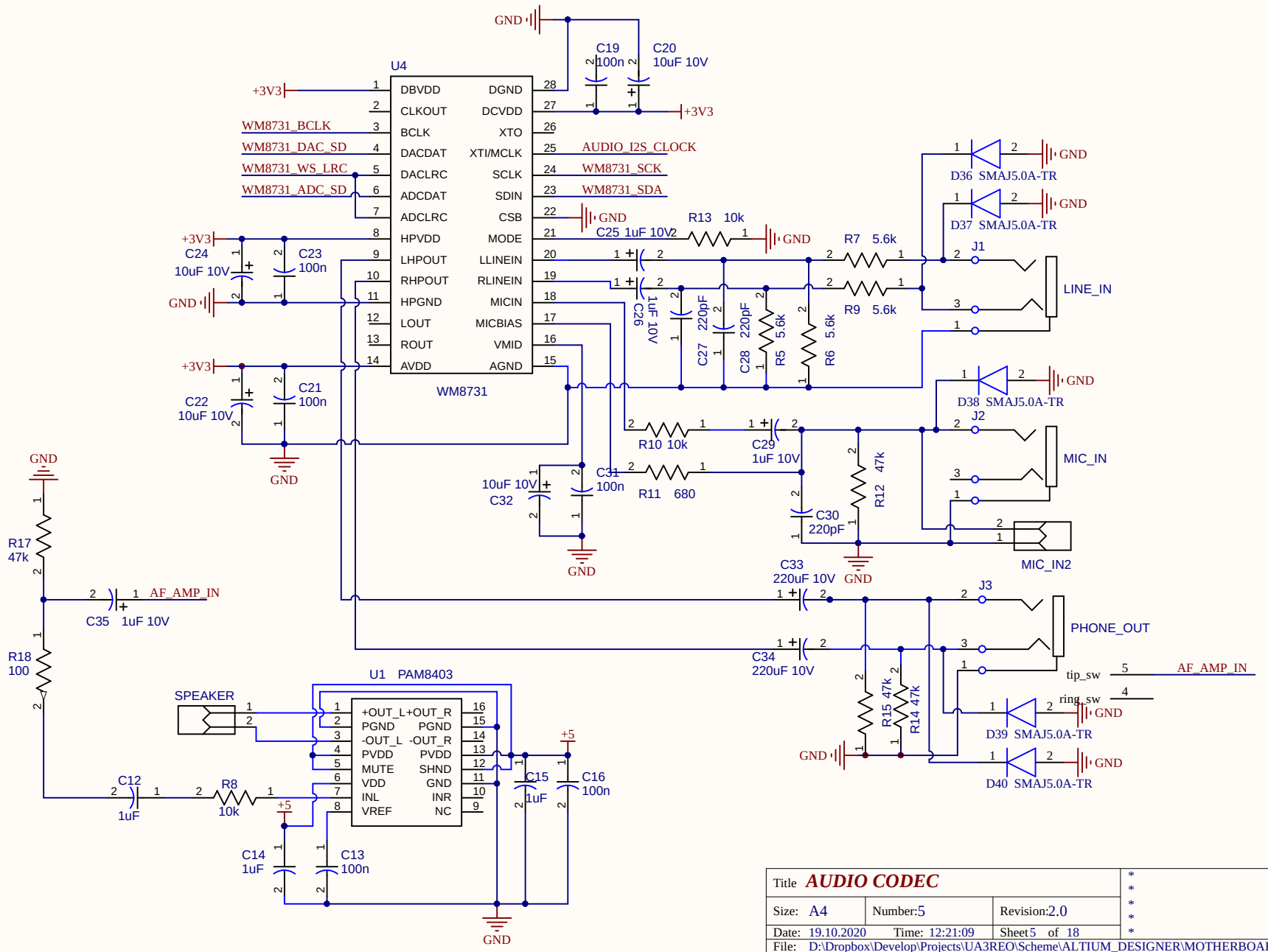

Title	*AUDIO CODEC*		
Size: A4	Number:5	Revision:2.0	
Date: 19.10.2020	Time: 12:21:09	Sheet 5 of 18	
File: D:\Dropbox\Develop\Projects\UA3REO\Scheme\ALTIUM_DESIGNER\MOTHERBOARD\AUDIO CODEC.SchDoc			

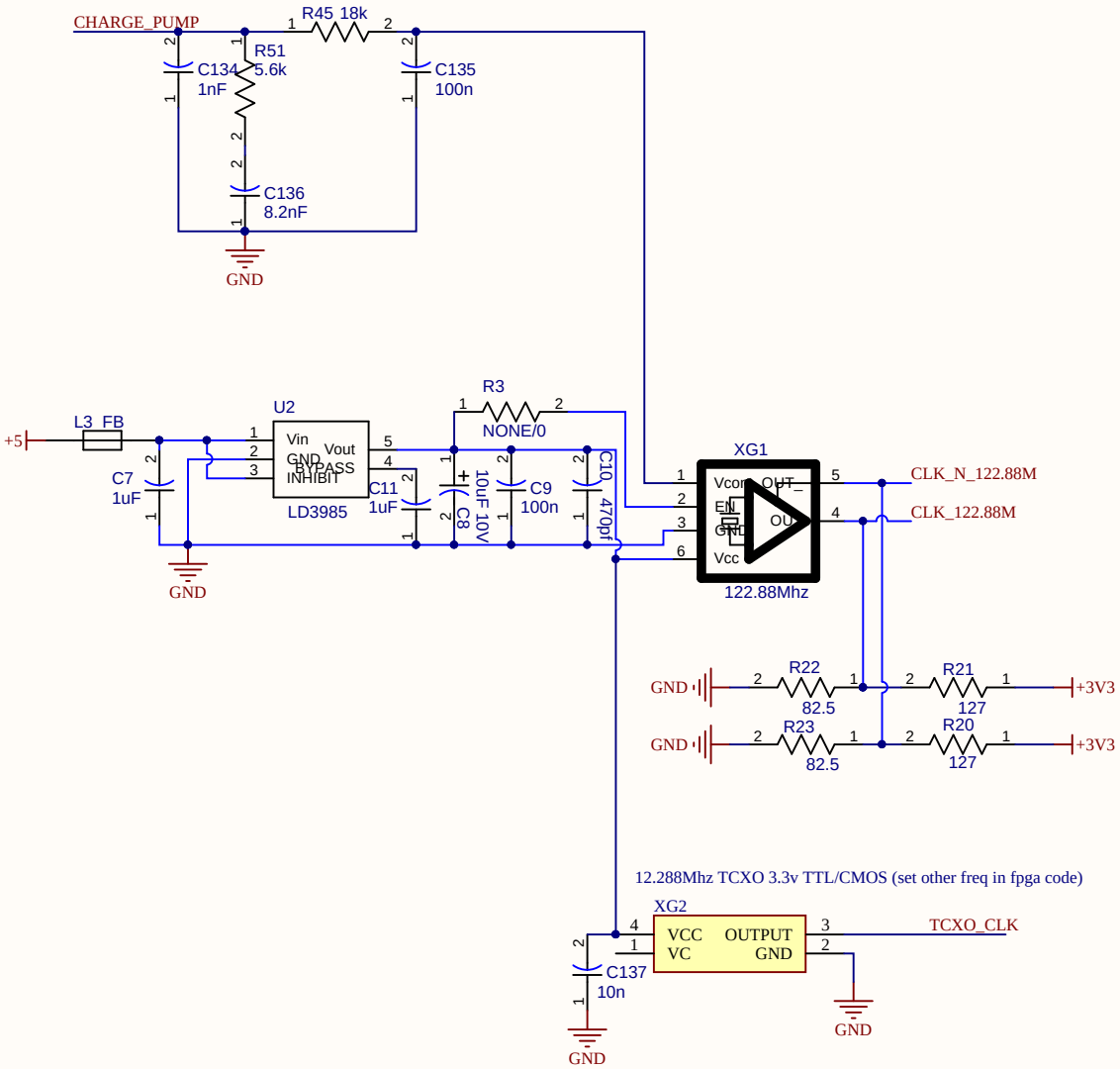

Title	*CLOCK_GENERATOR*		
Size: A4	Number:6	Revision:2.0	
Date: 19.10.2020	Time: 12:21:09	Sheet 6 of 18	
File: D:\Dropbox\Develop\Projects\UA3REO\Scheme\ALTIUM_DESIGNER\MOTHERBOARD\CLOCK_GENERATOR.SchDoc			

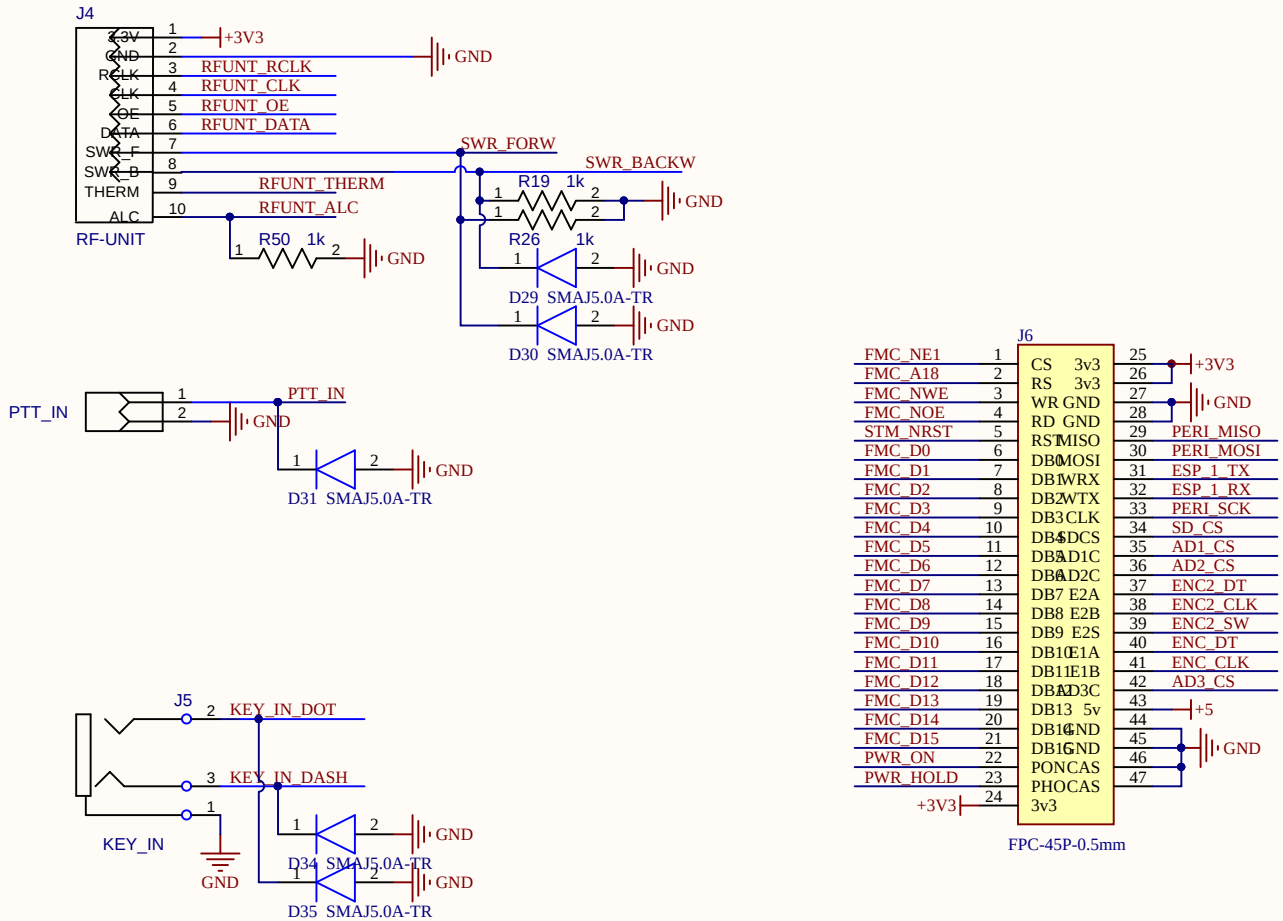

Title	***CONNECTIONS***		
Size: A4	Number: 7	Revision: 2.0	
Date: 19.10.2020	Time: 12:21:09	Sheet 7 of 18	
File: D:\Dropbox\Develop\Projects\UA3REO\Scheme\ALTIUM_DESIGNER\MOTHERBOARD\CONNECTIONS.SchDoc			

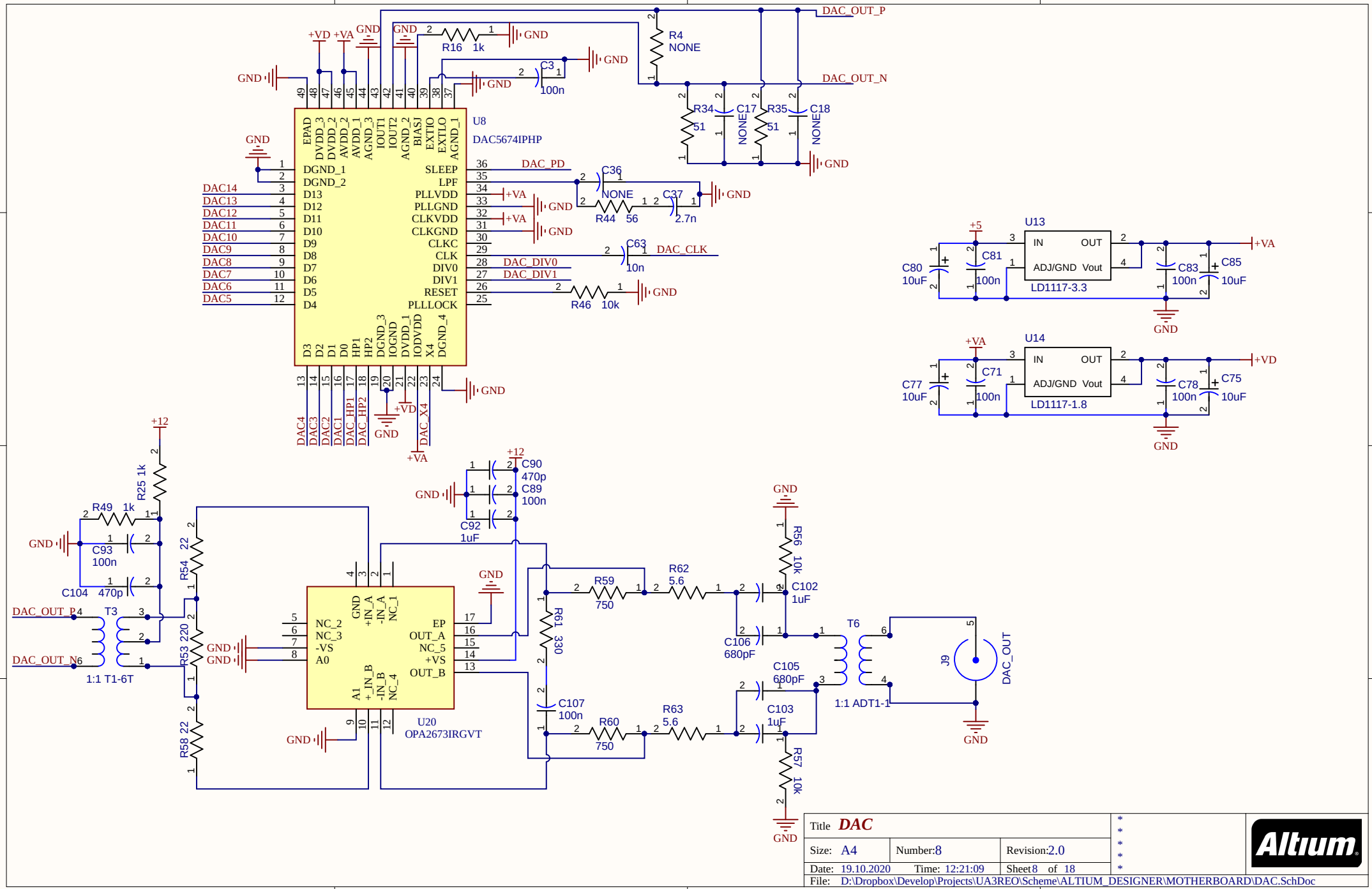

Title	DAC		
Size: A4	Number: 8	Revision: 2.0	
Date: 19.10.2020	Time: 12:21:09	Sheet 8 of 18	
File: D:\Dropbox\Develop\Projects\UA3REO\Scheme\ALTIUM_DESIGNER\MOTHERBOARD\DAC.SchDoc			

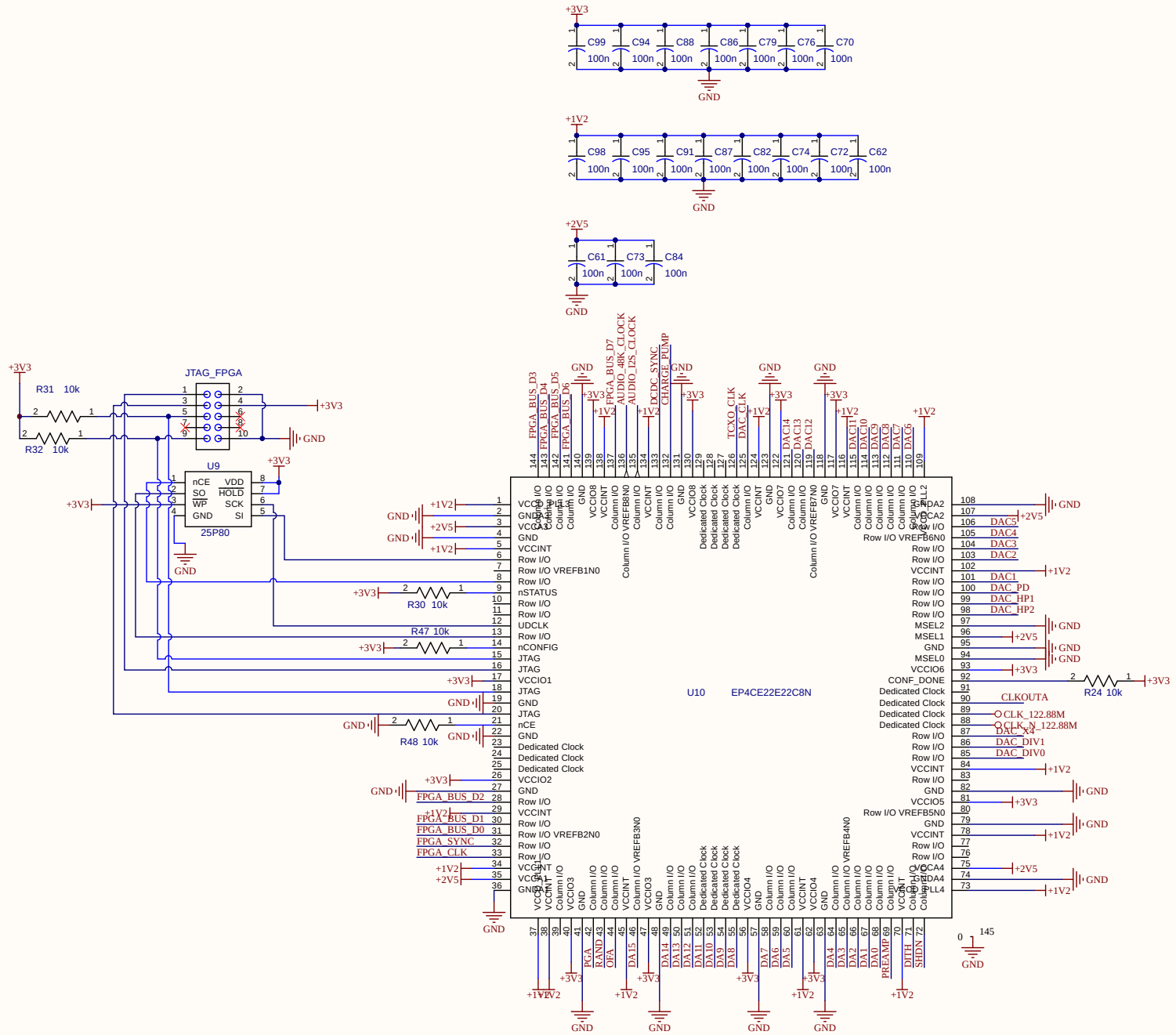

Title	*FPGA*		
Size: A3	Number:9	Revision:2.0	
Date: 19.10.2020	Time: 12:21:10	Sheet9 of 18	
File: D:\Dropbox\Develop\Projects\UA3REO\Scheme\ALTIUM_DESIGNER\MOTHERBOARD\FPGA.SchDoc			

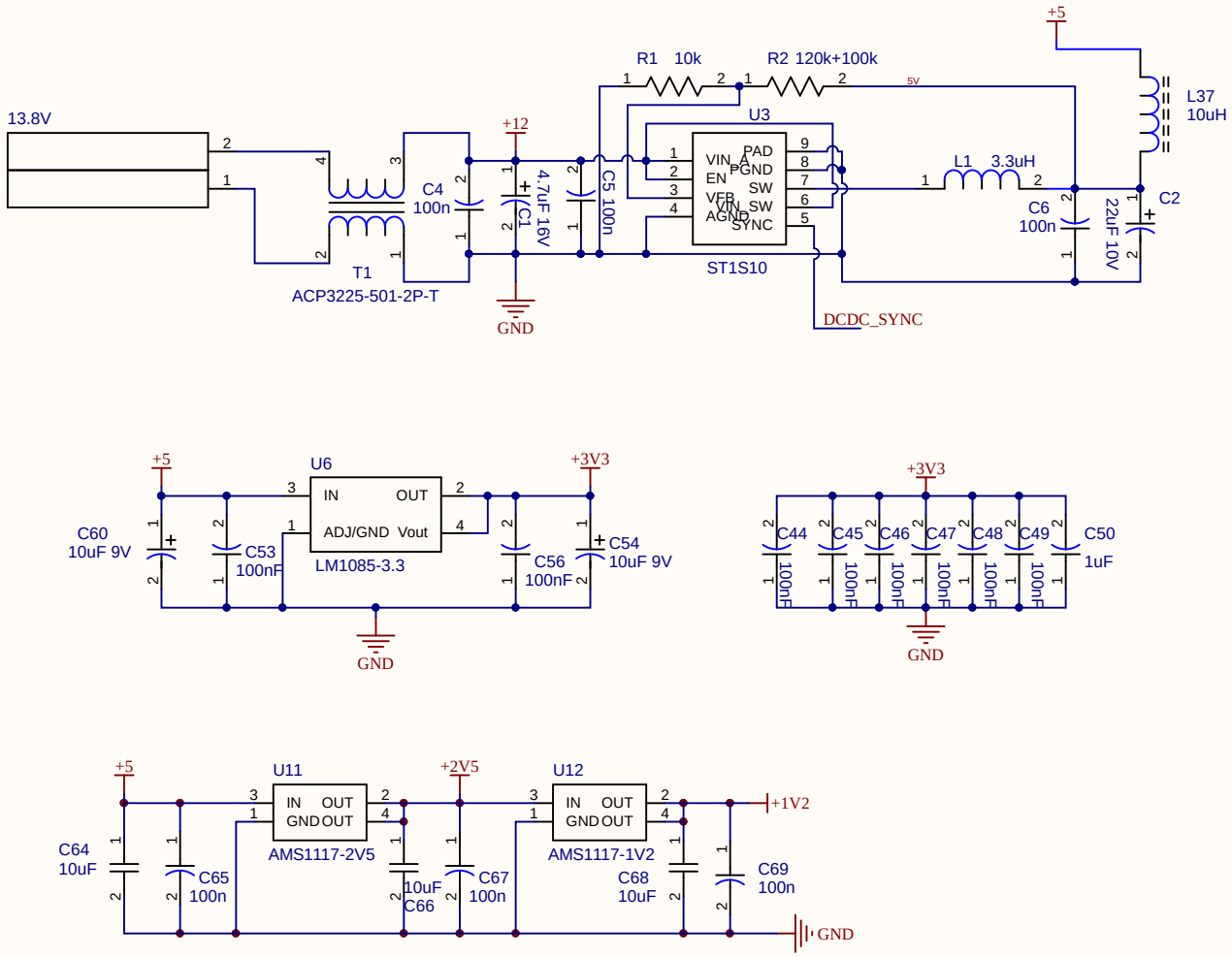

Title	***POWER***		
Size: A4	Number: 10	Revision: 2.0	
Date: 19.10.2020	Time: 12:21:10	Sheet 10 of 18	
File: D:\Dropbox\Develop\Projects\UA3REO\Scheme\ALTIUM_DESIGNER\MOTHERBOARD\POWER.SchDoc			

STM32

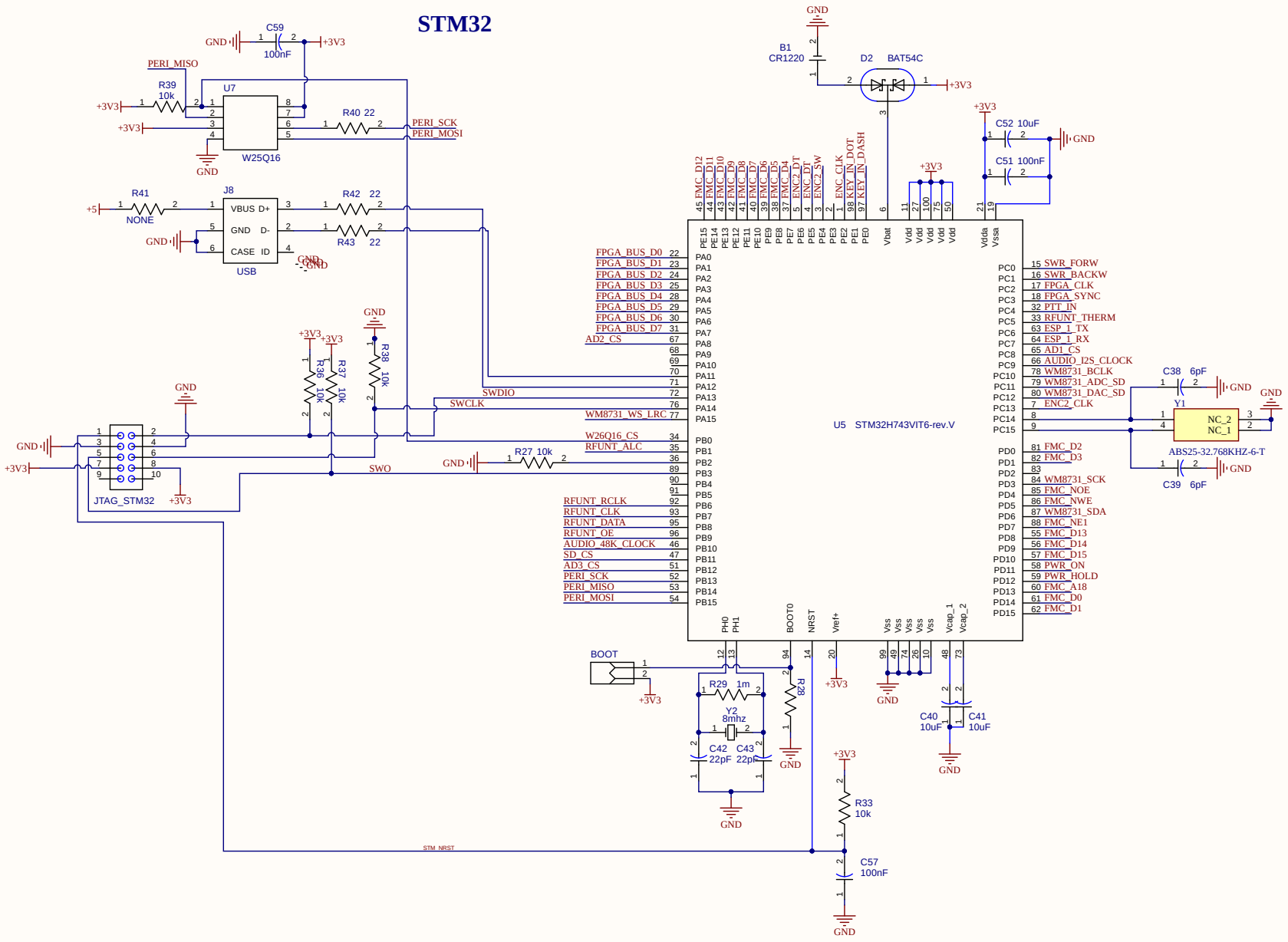

Title	STM32		
Size: A3	Number: 11	Revision: 2.0	
Date: 19.10.2020	Time: 12:21:10	Sheet 11 of 18	
File: D:\Dropbox\Develop\Projects\UA3REO\Scheme\ALTIUM_DESIGNER\MOTHERBOARD\STM32.SchDoc			

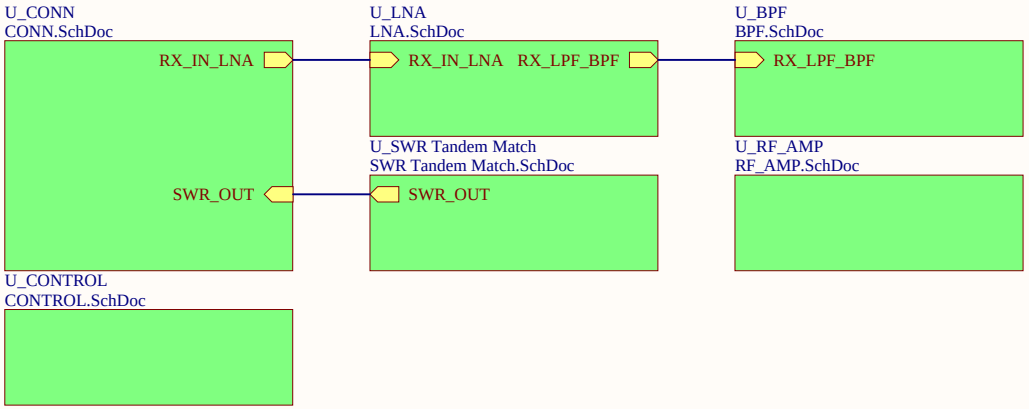

Title	***RF-UNIT***		
Size: A4	Number: 12	Revision: 2.0	
Date: 19.10.2020	Time: 12:21:11	Sheet 12 of 18	
File: D:\Dropbox\Develop\Projects\UA3REO\Scheme\ALTIUM_DESIGNER\RF-UNIT\RF-UNIT.SCHDOC			

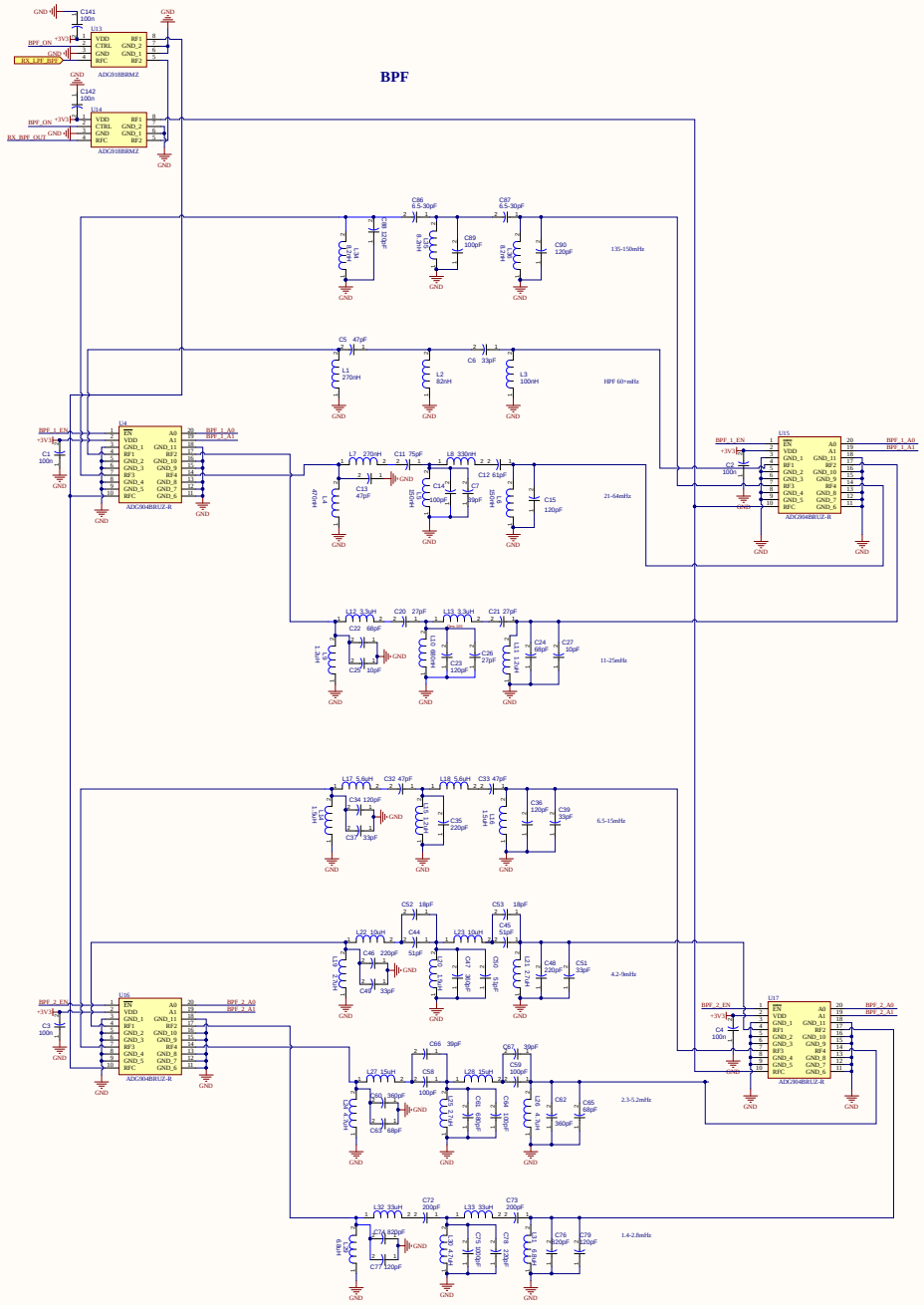

Title	BPF		
Size: A2	Number: 13	Revision: 2.0	
Date: 19.10.2020	Time: 12:21:11	Sheet 13 of 18	
File: D:\Drawings\Desktop\Projects\LA\BEO\Schema\ALTIUM_DF\SG20\RF\RF-UNIT\BPF.SchDoc			

TXRX_COMUTATOR

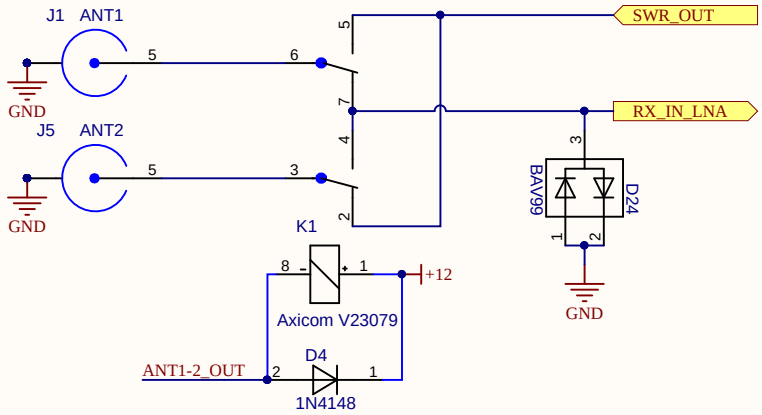

CONN

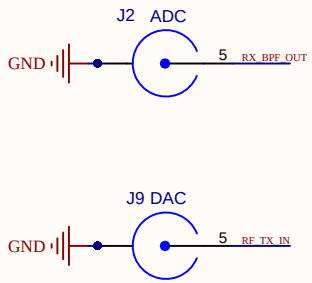

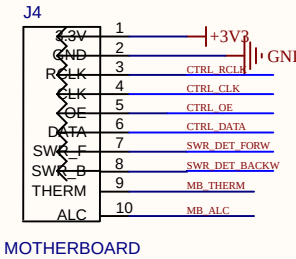

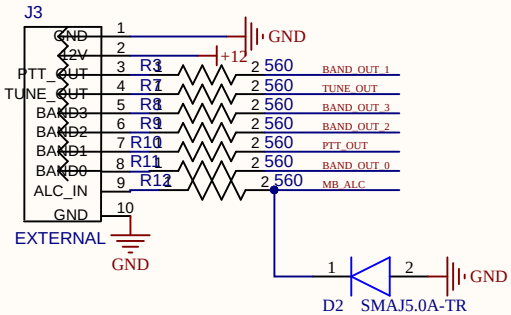

Title	CONN		
Size: A4	Number: 14	Revision: 2.0	
Date: 19.10.2020	Time: 12:21:11	Sheet 14 of 18	
File: D:\Dropbox\Develop\Projects\UA3REO\Scheme\ALTIUM_DESIGNER\RF-UNIT\CONN.SchDoc			

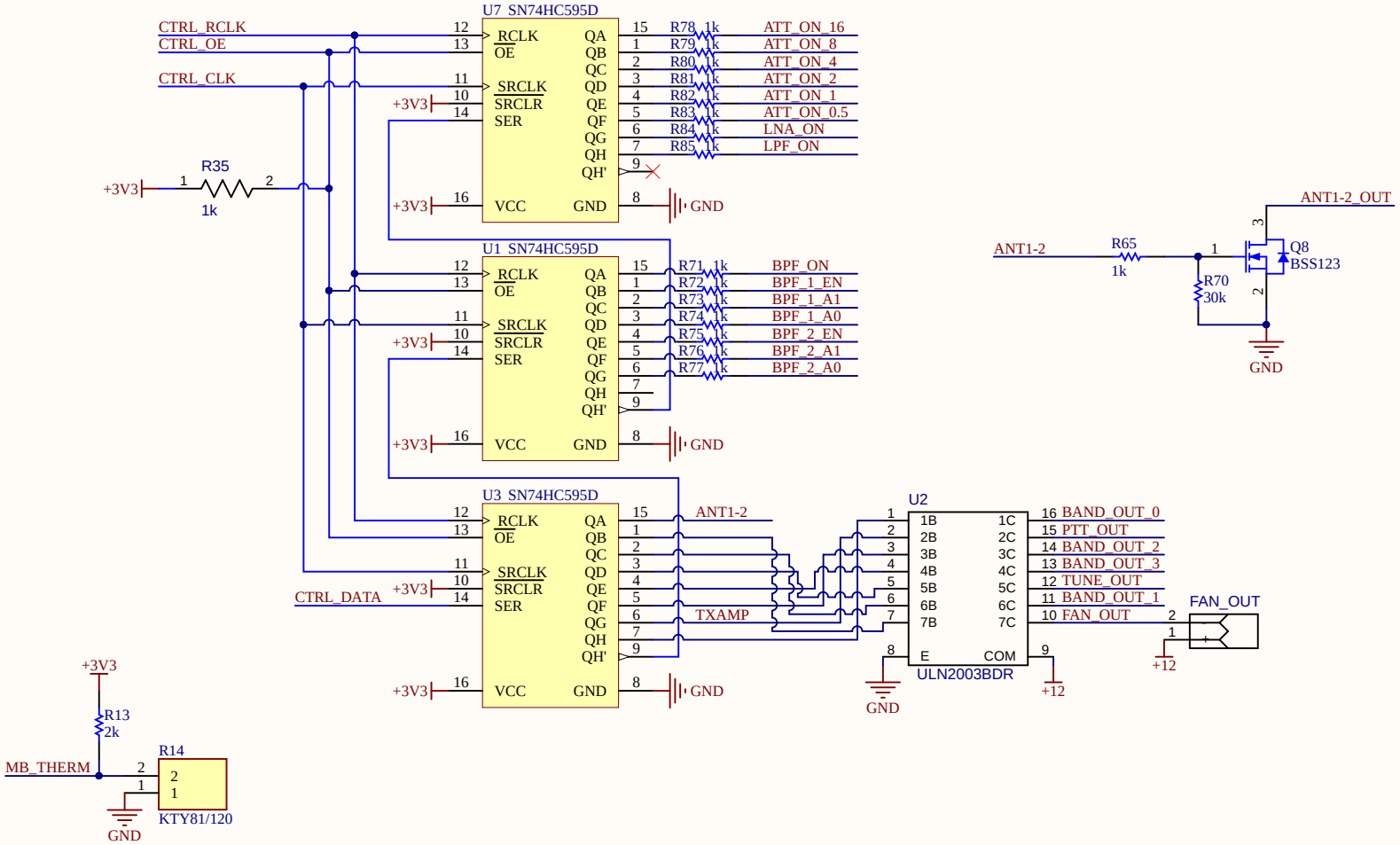

Title	CONTROL		
Size: A4	Number: 15	Revision: 2.0	
Date: 19.10.2020	Time: 12:21:11	Sheet 15 of 18	
File: D:\Dropbox\Develop\Projects\UA3REO\Scheme\ALTIUM_DESIGNER\RF-UNIT\CONTROL.SchDoc			

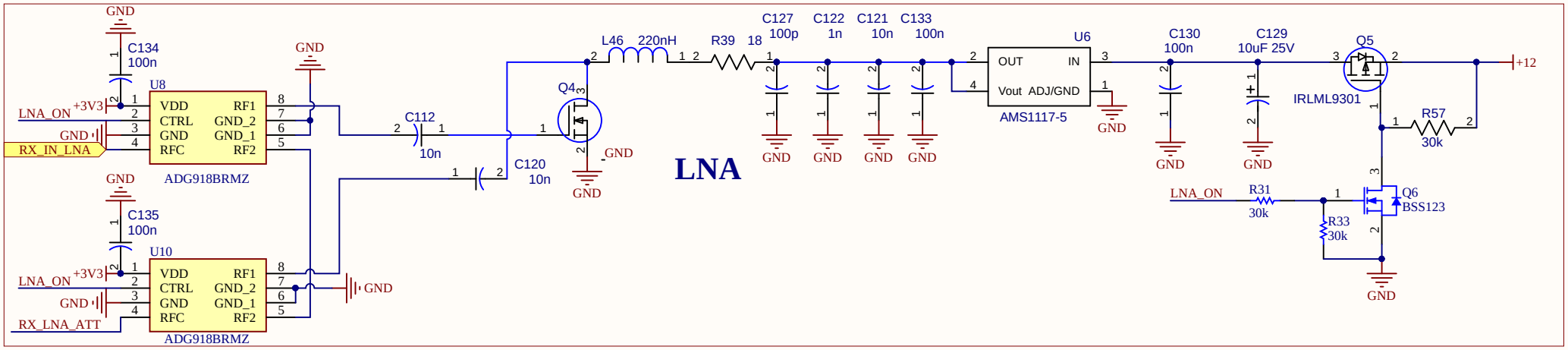

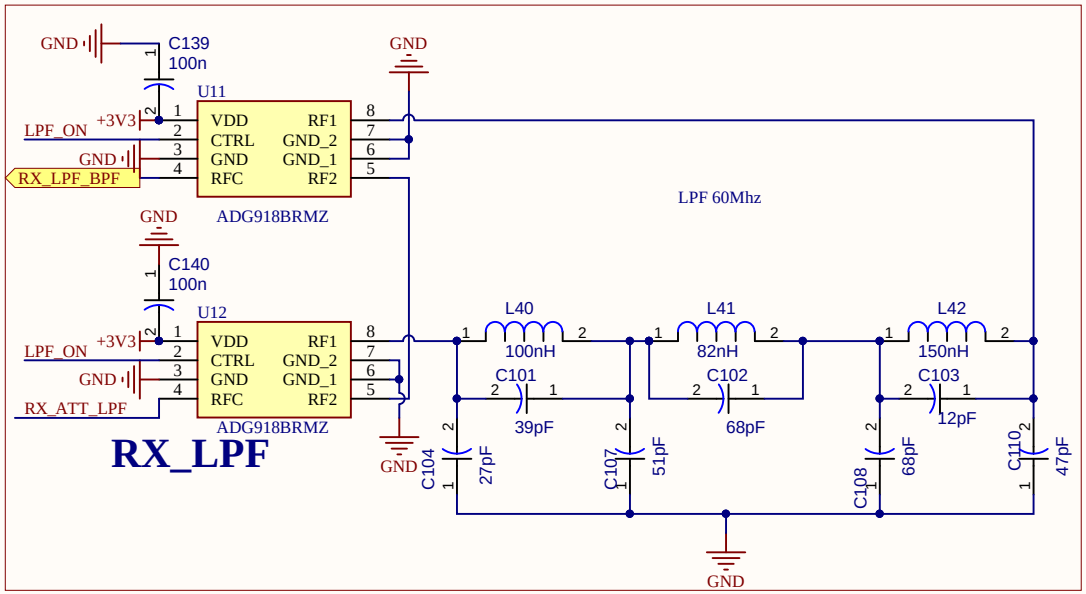

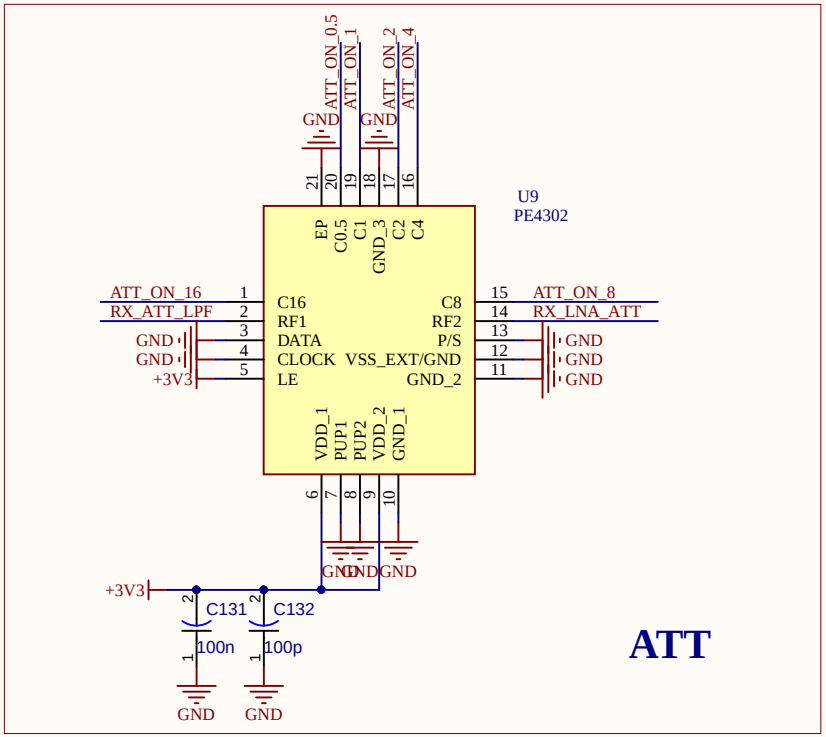

Title	*LNA*		
Size: A4	Number: 16	Revision: 2.0	
Date: 19.10.2020	Time: 12:21:12	Sheet 16 of 18	
File: D:\Dropbox\Develop\Projects\UA3REO\Scheme\ALTIUM_DESIGNER\RF-UNIT\LNA.SchDoc			

RF_AMP

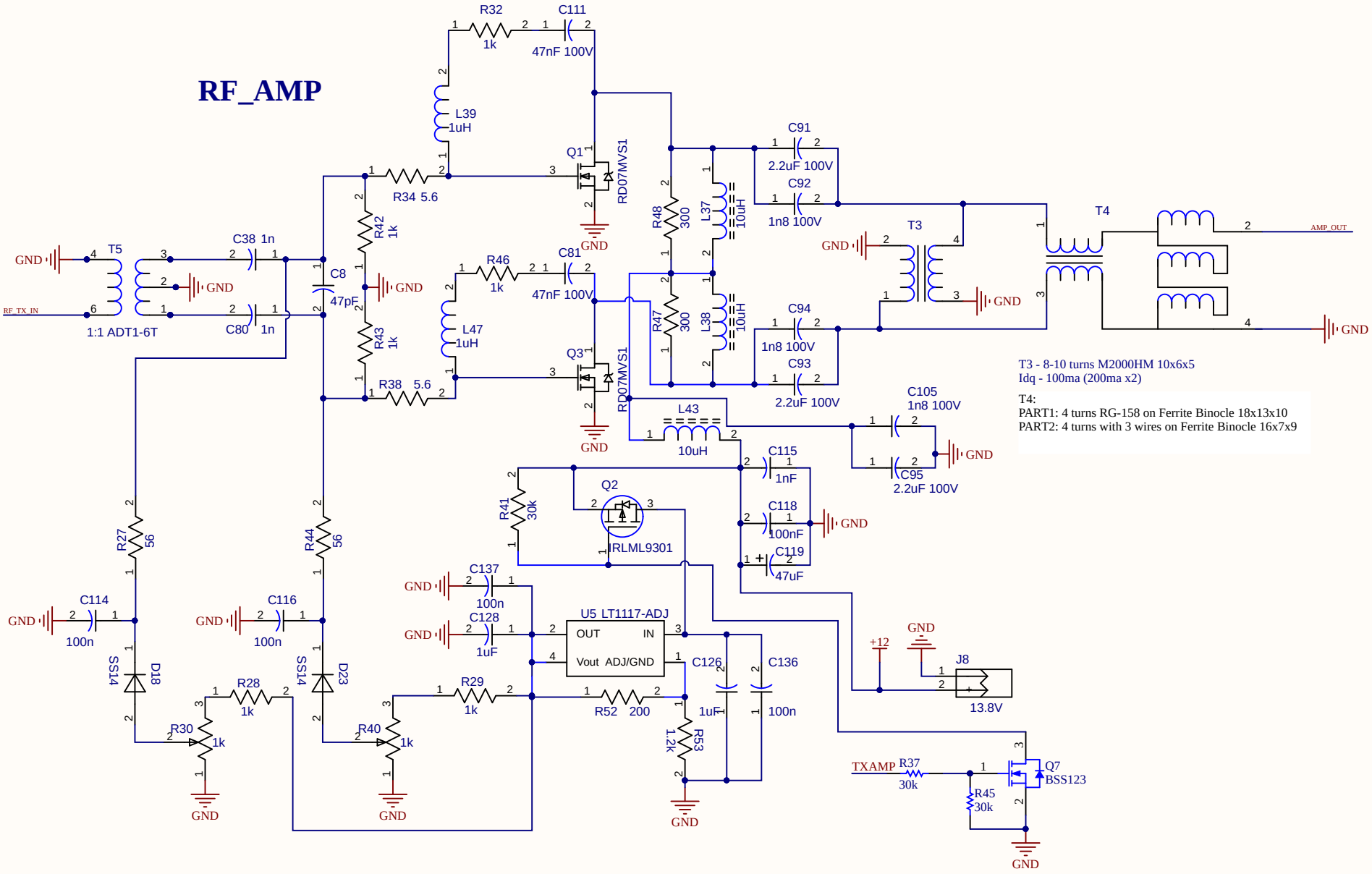

Title	*RF_AMP*		
Size: A4	Number:17	Revision:2.0	
Date: 19.10.2020	Time: 12:21:12	Sheet 17 of 18	
File: D:\Dropbox\Develop\Projects\UA3REO\Scheme\ALTIUM_DESIGNER\RF-UNIT\RF_AMP.SchDoc			

TX_LPF

LPF 170Mhz

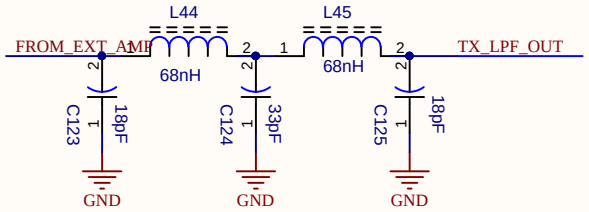

Катушки намотаны проводом 0.5мм на оправке диаметром 5мм, 3.5 витка

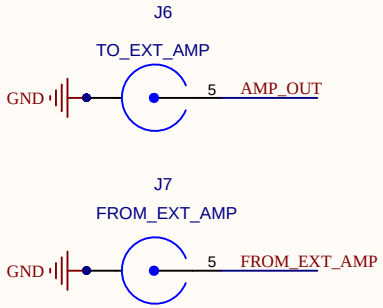

SWR Tandem Match

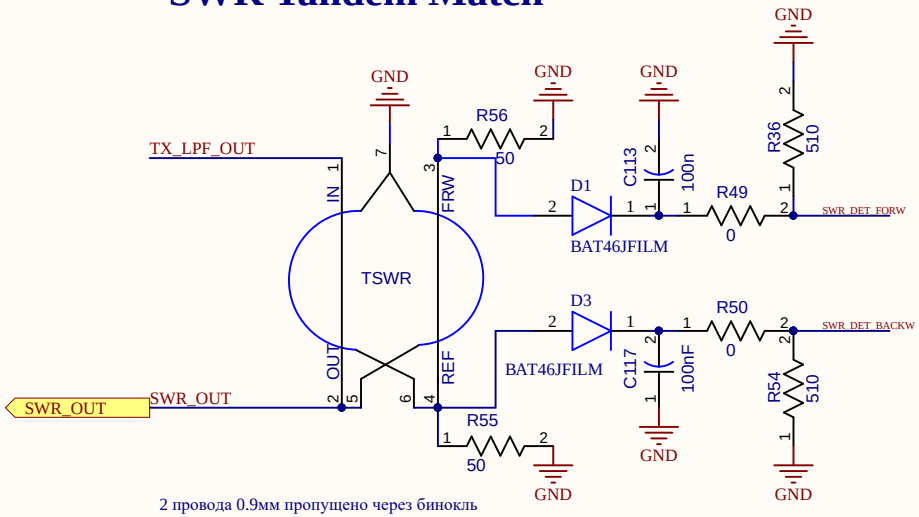

2 провода 0.9мм пропущено через бинокль

по диогонали пропущено и намотано по 10 витков 0.5мм

Title	*SWR Tandem Match*		
Size: A4	Number:18	Revision:2.0	
Date: 19.10.2020	Time: 12:21:12	Sheet 18 of 18	
File: D:\Dropbox\Develop\Projects\UA3REO\Scheme\ALTIUM_DESIGNER\RF-UNIT\SWR Tandem Match.SchDoc			