IDE302

Design MileStone Roadmap

Zeynep Tugsal S033824

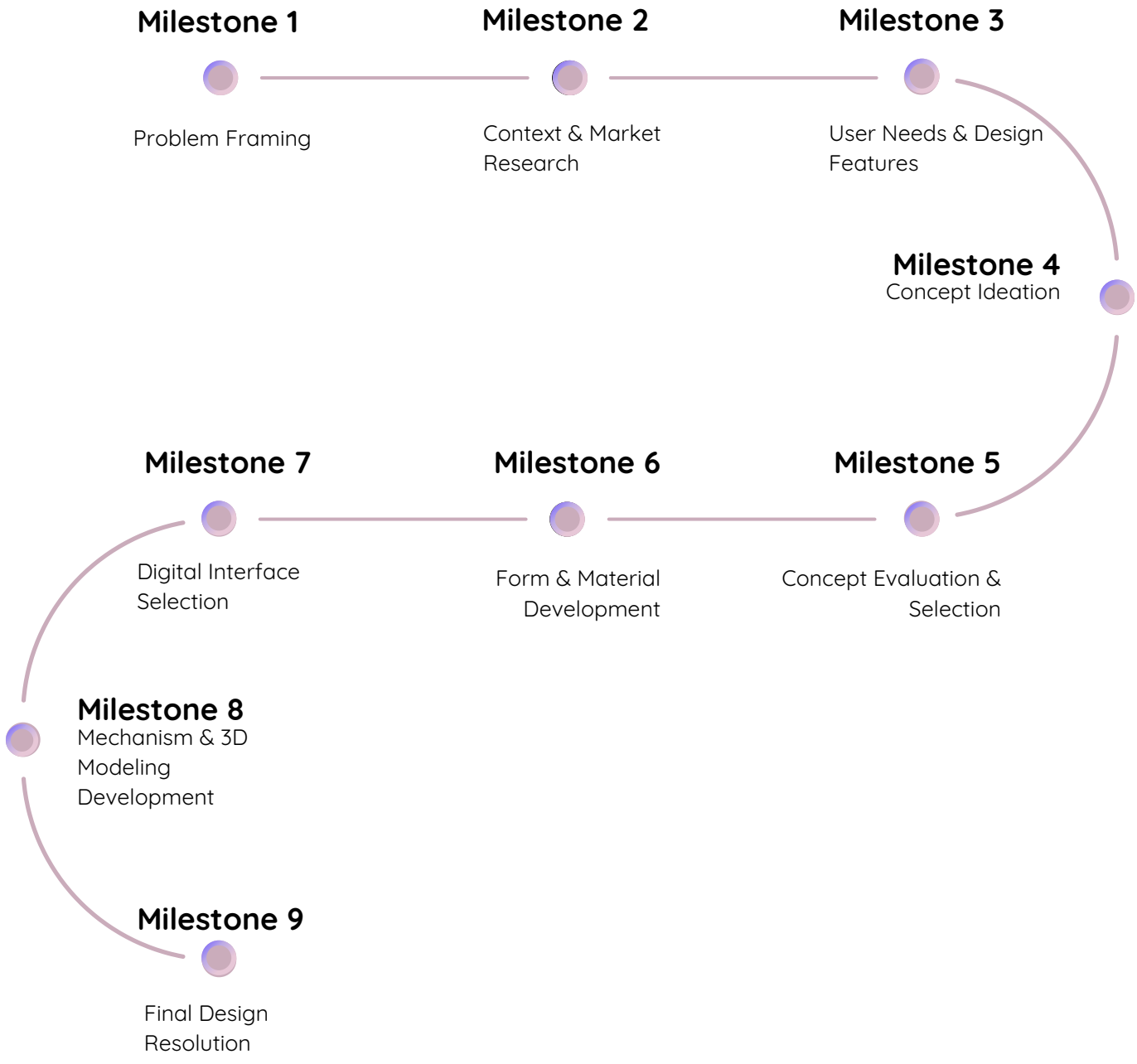

Milestone 1 -Problem Framing&Problem Statement

Herbal tea consumption has increased significantly in recent years as people increasingly seek beverages associated with health, relaxation, and natural ingredients. However, unlike coffee preparation, brewing herbal tea requires careful control of several parameters:

- **Temperature control**
- **Steeping time**
- **Interaction between plant materials and water**

Different botanical components—such as leaves, flowers, roots, and barks—have different structural characteristics. Because of this, they require different brewing temperatures and durations to effectively release their aromas, flavors, and active compounds. Therefore, precise temperature control and a controlled infusion process are essential to achieve an optimal brewing result.
Despite these requirements, most existing kitchen appliances are designed primarily for coffee preparation or basic water boiling.

- **Electric kettles can quickly boil water but do not control the infusion process.**
- **When preparing herbal tea on the stove, users would theoretically need to measure water temperature with a thermometer, yet most consumers do not do this in practice.**
- **Because dedicated herbal tea brewing devices are limited, many users simply add herbs directly to boiling water.**

This common method often leads to:
- **Uncontrolled temperatures**
- **Inconsistent steeping times**
- **Inability to meet the specific brewing requirements of different botanical ingredients**

As a result, the brewing process becomes inconsistent, preventing the full extraction of aromas, flavors, and beneficial compounds.
This reveals a clear design opportunity to improve both the technical control and the user experience of herbal tea preparation.

Problem Statement

How might we design a brewing system that supports the different temperature and infusion requirements of various botanical ingredients while making the herbal tea preparation process more controlled, consistent, and user-friendly?

AI Role	**High-Level Strategic Prompt (Command)**	**AI Response Summary (Synthesized Insight)**
Clarifier	"Analyze the raw interview data from 3 participants. Distill the recurring pain points regarding **'device noise'** and **'market saturation of coffee machines'** into a cohesive User Need Statement. Focus on the psychological subtext of **'peace' vs. 'functional clutter'**."	Identified that users equate silence with **"Acoustic Wellness."** The core problem is not just making tea, but the lack of a serene, quiet environment during the brewing process which current loud appliances disrupt.
Re-framer	"Reframe the absence of a dedicated herbal tea machine as a **'Lifestyle Gap'** rather than a hardware void. Challenge the 'faster is better' assumption and propose a design philosophy where **'deliberate slowness'** and **'silence'** are the primary values."	Shifted the project focus from a "brewing tool" to a **"Mindfulness Companion."** The lack of tea machines in a coffee-saturated market represents a neglect of "slow-living" rituals in modern kitchen design.

Selective AI Integration

What I Accepted?

I incorporated the Critique's feedback regarding the challenges of "Total Silence." To ensure the user still receives necessary operational feedback without breaking the silence, I decided to replace audible alerts with a minimalist lighting system. This allows the machine to remain 100% silent while providing intuitive visual cues.

What I Rejected ?

I rejected the complex sensory sensors (such as aroma detection) suggested by the Expander. I felt these would increase the "Functional Clutter" identified by the Clarifier, ultimately compromising the product's core value of simplicity.

Milestone 2- Context & Market Research

Product Name	Key Value Proposition	Pain Point / Gap	Commonalities with Your Product	
Sage (Breville) The Tea Maker	Fully automatic tea basket (auto-steep) and precise temp control.	Motor noise and loud beeps disrupt the tranquility of the ritual.	Precision brewing times and specialized herbal temperature settings.	
Gourmia GTC8000W Tea Square	Sleek square glass design and rapid-brew technology.	High "functional clutter" with too many digital buttons and loud alerts.	A dedicated brewing chamber optimized for loose-leaf herbal tea.	
Cuisinart PerfecTemp	6 pre-set heat settings and programmable timer.	Traditional kettle form factor; lacks the "ceremonial" feel of a ritual.	Ideal steeping temperatures based on tea type (Green, White, Herbal).	
Fellow Stagg EKG Pro	Minimalist aesthetic and precise gooseneck pour-over control.	Only heats water; the brewing process remains entirely manual.	Modern, minimalist design language focused on the "Slow-Living" lifestyle.	

Milestone 3- User Needs & Design Features

REJECTED DESIGN CONCEPTS

- **Dynamic Temperature Ring:** A circular progress bar around the "80°C" display that fills or changes color (blue -> orange -> red) as the temperature increases, rather than just displaying the text.
- **Personalized Brightness:** The interface automatically adjusts its brightness according to ambient light (night/day mode).
- **Reason for Rejection:** The herbal tea machine experience is intended to be simple, and adding these features would unnecessarily complicate it. The guiding principle is to keep simple things simple.
- **Interaction and Accessibility:**Haptic Feedback: Slight vibrations felt on the user's phone or the device panel when adjusting the temperature setting.
- Voice Command Integration: A microphone/wavelength visual for commands like "Hey Gemini, set the water to 80 degrees."

Design Approach & Rationale for Rejection

"This design is about protecting the 'moment of pause' that herbal tea rituals provide. I intentionally avoided 'feature fatigue' by leaving out unnecessary digital layers. To me, a premium experience is defined not by the abundance of features, but by the courage to simplify. I prioritized intuitive minimalism to keep the user present in the moment."

Design Decisions

- Maintain a clean cylindrical form language
- Integrate the digital interface subtly into the upper structure
- Simplify the mechanical system to avoid visual complexity
- Prioritize clarity of the brewing chamber and user interaction

Keywords

- **Simplicity Visual Therapy Balance Integrity**

Step 1: The pitcher is lifted from the induction base to be filled with water.

Step 2: The top infuser is rotated to be removed, filled with herbal tea, and then locked back into place.

Step 3: The pitcher is placed back on the base, and the start button on the interface is pressed.

Step 4: Once the water reaches the ideal temperature, the automatic infusion system lowers the basket into the water.
When steeping is complete, the basket automatically retracts, and the user is notified via a soft light or chime.

Milestone 4- Concept Ideation

Visual Hierarchy, Intuitive Cues, Ambient Communication, User Tranquility.

Customized Steeping Strategy
Addressing the challenge of varying brewing temperatures for delicate leaves vs. tough herbal roots through a seamless, automated solution.

AI Role Labels: Expander & Clarifier

Strategic Prompt (Expander):
"Analyze the differing thermal requirements (e.g., 80∘C vs. 100∘C) for delicate tea leaves and hardy herbal roots. Propose a system where the machine 'silently' applies the ideal brewing profile based on the tea type, without forcing the user to navigate complex temperature settings."

Design Decisions & Reflections
Decision:
Instead of complex temperature dials and digital screens, I designed two primary brewing modes: "Delicate" and "Intense." These modes communicate the brewing profile to the user not through color changes, but through the pulsing speed of the light, creating a more intuitive and rhythmic experience.

What I Accepted
I adopted the AI's warning regarding "Thermal Shock." Instead of pouring boiling water directly onto delicate leaves, I integrated a "Soft-Brew" mechanism where the heat is increased gradually. This prevents the leaves from burning and preserves their nutritional integrity.

What I Rejected
I rejected the AI's suggestion for "Mobile App Temperature Tracking." This feature contradicted the user's desire for a "digital detox" and a quiet, unplugged ritual. I kept all controls on a physical, tactile surface on the device itself to maintain a grounded, hands-on experience.

User Persona

Category	Category
User Identity	**Selin Aksoy (34)** – Senior Project Manager in a leading private sector firm.
Lifestyle	Married, living in a fast-paced urban environment. She works full-time at a high-pressure corporate office and manages a busy household.
Behavioral Traits	Values "quality time" over quantity. Due to her intense work schedule, she views her herbal tea preparation as a vital "micro-pause" to transition from work stress to domestic peace.
Motivations	Seeking a sensory escape through the visual and aromatic qualities of tea; values "invisible technology" that works perfectly without requiring constant attention.
Pain Points	Standard office or home appliances that over-boil delicate herbs, ruining the flavor. Cluttered interfaces that add to her "digital fatigue" after a long day of spreadsheets and meetings.
Expected Interaction	A seamless, quiet, and sophisticated system that understands the chemistry of different ingredients (leaves vs. roots) while maintaining a minimalist aesthetic.

Milestone 5- Concept Evaluation & Selection

- **Perceived Technological Complexity**
The design appeared too technological for a herbal tea machine, whereas herbal tea is typically associated with calm and natural experiences.

- **User Experience Concerns**
Visible mechanisms and layered brewing structure could make the product confusing and less intuitive.

- **Visual Over-Engineering**
The exposed internal system created a sense of unnecessary complexity.

- **Product Identity Misalignment**
The design language resembled laboratory or high-tech coffee equipment rather than a herbal tea product.

- **Spatial Efficiency**
The structural frame increased the product's overall footprint, reducing compactness for kitchen use.

- **Simplification Opportunity**
The concept indicated that the core brewing idea could remain while simplifying the design.

- **Cylindrical Interface Challenge**
Placing a digital interface on a curved cylindrical surface created integration difficulties and risked disrupting the visual flow.

- **Top & Bottom Thickness Issue**
The thickness required for the top interface and bottom base risked making the form appear visually heavy.

- **Form Distortion Risk**
Added digital and structural components could compromise the purity of the cylindrical geometry.

- **Oversizing Risk**
The interface and base elements could become disproportionately large compared to the glass chamber.

- **Oversized Digital Interface**
The large interface visually dominated the product and overemphasized technology for a calm herbal tea experience.

- **Unnecessary Functional Complexity**
Excessive digital controls risked complicating a normally simple brewing process.

- **Form Inconsistency**
The geometric body did not harmonize with the rounded glass teapot, creating visual mismatch.

- **Design Simplification Direction**
Indicated the need for a smaller, more integrated interface and a clearer, more balanced design.

Milestone 6-Form & Material Development

AI Collaboration: Role Tags and Impactful Prompt (Clarifier)

Prompt : "I have designated the edges of the induction base plate modeled in Fusion 360 as 'brushed metal.' To avoid visual clutter where this texture meets the smooth surface of the glass, would a chamfer or a fillet provide a more technological and clean finish?"

Accepted: Induction Technology I used induction to eliminate cables and heating elements, keeping the glass transparency as the central focus.

Transformed: Formal Language I replaced traditional rounded edges (fillets) with precision chamfers, shifting the design from a standard appliance to a high-end technological object.

On Materiality:

The AI suggested that using brushed metal at the base provides a "grounding" effect, balancing the visual lightness of the glass and making the technology feel more stable and reliable.

- **Main Body:** Borosilicate Glass (Thermal shock resistant, high transparency)
- **Heating Base and Body Frame:** Brushed Stainless Steel (304 Grade)
- **Infusion (Brewing) Basket:** Laser-Cut Micro-Perforated Stainless Steel
- **Induction Heating Components:** Litz Wire (Copper Coil) and Ferromagnetic Base PlatE
- **Control Panel:** Semi-Transparent Polycarbonate (For hidden-until-lit display)
- **Lighting Details:** Matte Light Diffuser Strip (For LED ring)
- **Sealing Elements:** Food-Grade Medical Silicone

Heating Logic: Induction System:

- **Base Unit (The Source):** The induction coil located within the main base unit generates a powerful, non-contact magnetic field.
- **Metal Plate (The Conductor):** The metal plate integrated into the bottom of the pitcher captures this magnetic field and instantly converts it into heat.
- **Pure Transmission:** Heat is transferred directly from the metal plate to the water. With no visible resistors or wires, the transparency of the glass and the simplicity of the ritual are preserved.

Milestone 7- Digital Interface Selection & User Interaction
How to Use the Product?

The Conflict: AI-Generated Complexity vs. User-Centric Ritual
During the Ideation II phase, the AI tools suggested several concept variations featuring large, circular digital interfaces with high-density graphical data. While these AI outputs were technologically impressive, I found that they contradicted the core objective of my project: the "Herbal Infusion"

AI Proposal: Large-scale screens, complex data visualizations, and heavy digital interaction.

My Decision: A minimalist, "invisible" interface integrated into the chrome cylinder to prioritize the sensory experience of the tea preparation.

Rationalizing the Minimalist Shift

Following the project's focus on Interaction & Experience, I rejected the complex UI proposed by the AI to achieve the following:
Preserving the Ritual: Instead of distracting the user with a digital dashboard, I focused on the Sensory Elements—the visual transformation of the herbs inside the glass carafe.

Simplifying the Sequence: The preparation sequence was restructured to show only the most critical information (Temperature and Time Remaining) with elegant, non-intrusive typography.

Refined Safety & Ergonomics: I replaced the AI's complex graphs with a subtle color-coding system to signal the completion of the process. The interface uses soft amber tones to indicate that the tea is ready, reducing cognitive load while maintaining User Agency.

Mode I: (Soft Infusion):
When the water reaches the ideal lower temperature, the filter gently lowers the delicate herbs into the water, preventing them from being scalded or over-extracted.

Mode II: (Decoction):
Designed for tougher ingredients such as cinnamon sticks, ginger, or roots, this mode allows the herbs to remain immersed in high-temperature water for a longer duration, enabling proper extraction of their active compounds.

Mode III: (Hybrid):
This mode offers a layered brewing process. First, harder ingredients are boiled to release their flavors and beneficial compounds; afterward, delicate herbs are introduced at the appropriate temperature to complete the infusion without damaging their sensitive properties.

Milestone 8 - Mechanism & 3D Modeling Development

In the 3D model development stage, the working principle of the product remained the same in all models, while different form and size variations were explored. As a result of these form and scale experiments, the final design was achieved.
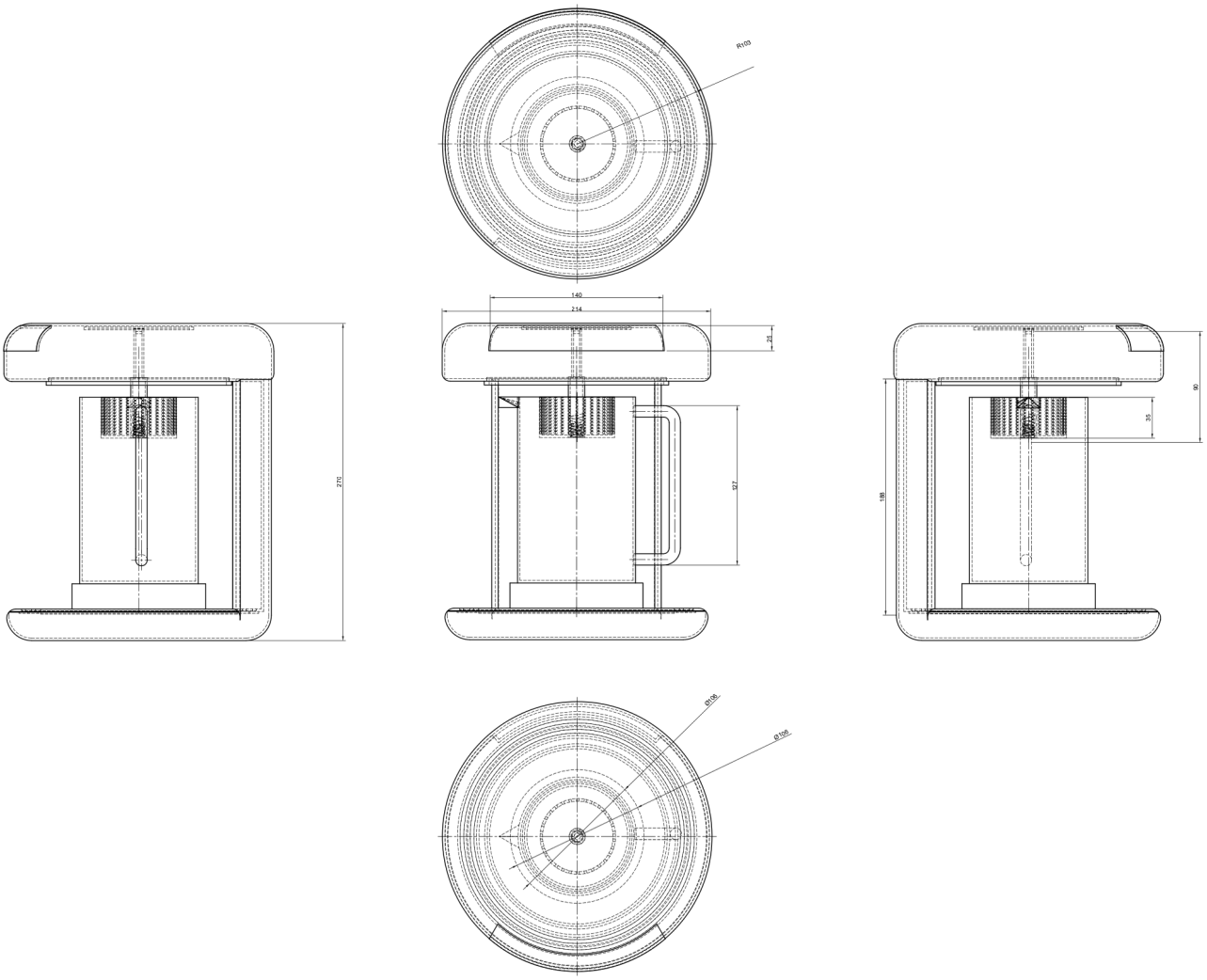
Milestone 9- Final Design Resolution