IDE302 Project 1 Design Milestones

Emre ÖZLÜK s028607

Milestone 1: Emphaty (Empati) LOG 0005

AI role: Clarifier

"How can the ritual of preparing tea or coffee in an outdoor setting be interpreted through user behavior, environmental conditions, and social interaction?"

AI Response Summary

AI analyzed the ritual of preparing tea or coffee in an outdoor context and identified that it functions both as a practical necessity and a brief social moment. The response highlighted how environmental conditions, time pressure, and group dynamics shape the way this ritual is performed.

AI Response Summary

Through ritual analysis, I discovered that the need for hot beverages in a camping environment and the rituals that stem from this need were rituals I had overlooked. One of these was learning that there could be unique recipes or individual taste preferences.

Accepted

Special Recipe Finding Added to Project Phase

Rejected

Since ritual snapshots were included, the statuses were added.

Converted

The findings were evaluated for Persona Recruitment.

Milestone 2: Emphaty (Empati) LOG 0013

AI Role: Expander

Generate exactly 20 highly specific, behavior-focused questions that define the user's real-world context for an outdoor hot beverage system.

AI Response Summary

AI generated structured questions about:

- safety habits
- ergonomic constraints
- interaction while wearing gloves
- environmental constraints
- transport conditions

AI Response Reflection

The AI helped clarify the unknown aspects of user behavior in extreme environments and structured the research questions.

Accepted

- Behavior-based interview questions
- Environmental context framing

Rejected

Generic lifestyle questions

Converted

Field interview dataset for the upcoming Prompt and process

Milestone 3: Ideate (Fikir üretmek) LOG 0015

AI role: Re-framer

Create reframed, new evidence cards by offering alternative perspectives beyond the original dataset.

AI Response Summary

AI analyzed existing research data from different perspectives:
extreme environment decision making
cognitive tunneling under stress
safety awareness in outdoor activities
reliability of equipment in wilderness

AI Response Summary

Through ritual analysis, I discovered that the need for hot beverages in a camping environment and the rituals that stem from this need were rituals I had overlooked. One of these was learning that there could be unique recipes or individual taste preferences.

Accepted

Special Recipe Finding Added to Project Phase

Rejected

Since ritual snapshots were included, the statuses were added.

Converted

next iteration improvements (3DModel

Milestone 4: Test

LOG 0033

AI role: Critiquer

Evaluate prototype ergonomics, usability, form balance, and modular interaction from images.

AI Response Summary

AI evaluated:

- grip comfort
- module assembly logic
- ergonomic risks
- manufacturability signals

AI Response Summary

The AI, in the given task, thoroughly examined the photo gallery created on the mockup and offered important suggestions in areas such as holding size.

Accepted

ÜThe product will be converted to a 3:1 scale.
The thickness of the handle will be 14mm.

Rejected

irrelevant aesthetic suggestions

Converted

next iteration improvements (3DModel

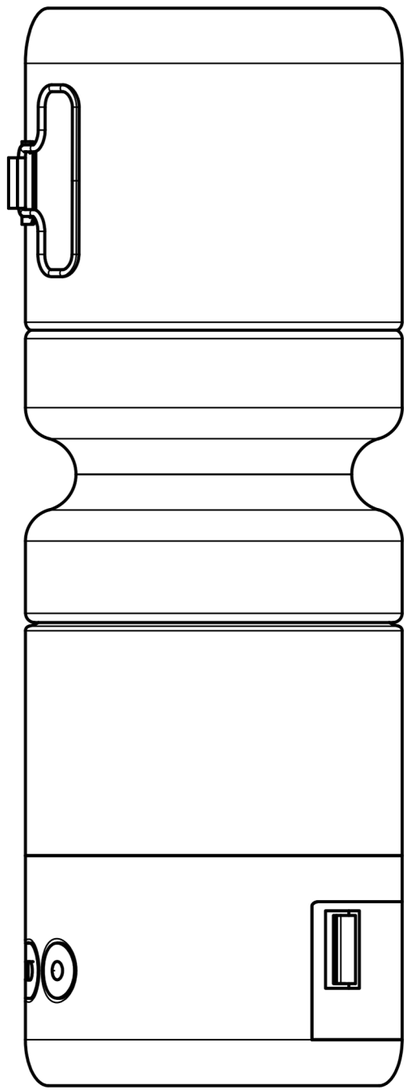

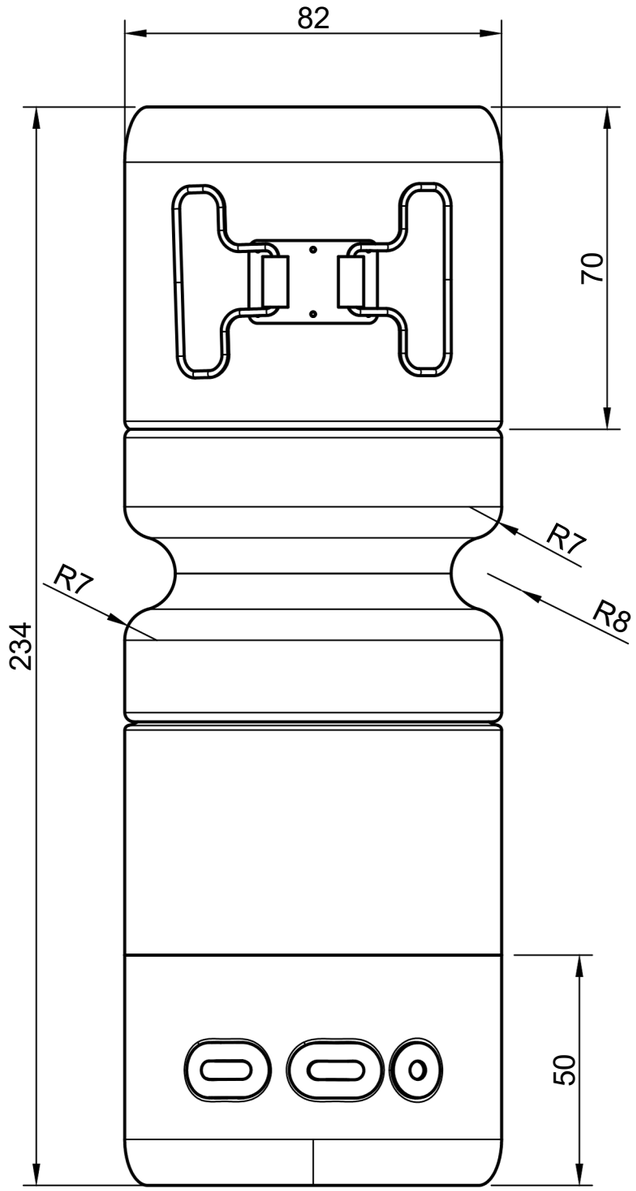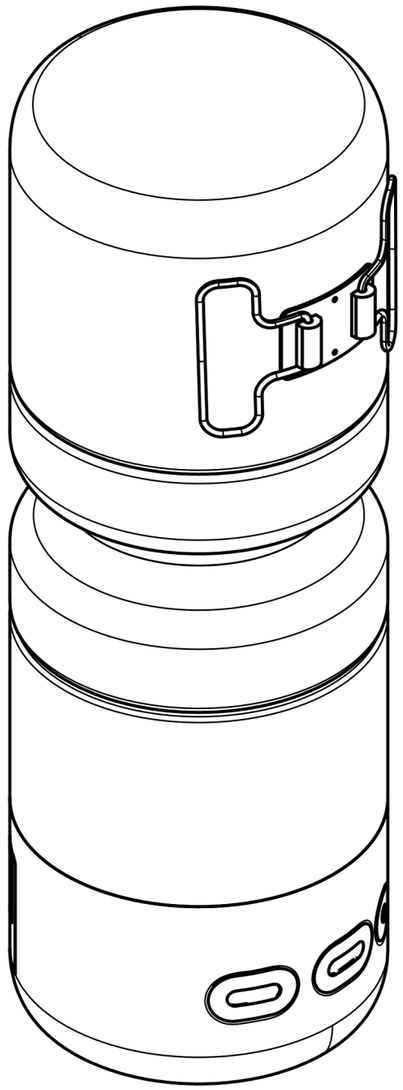
82
70
R7
R7
R8
234
50