Demista

First of all, I decided to build a modern tea maker and created a digital drawing of it.

After that, I sent this drawing to ChatGPT and Gemini and asked them to visualize it and show different color options.

Than, I thought the design you drew looked too simple, so I wanted to create a different design.

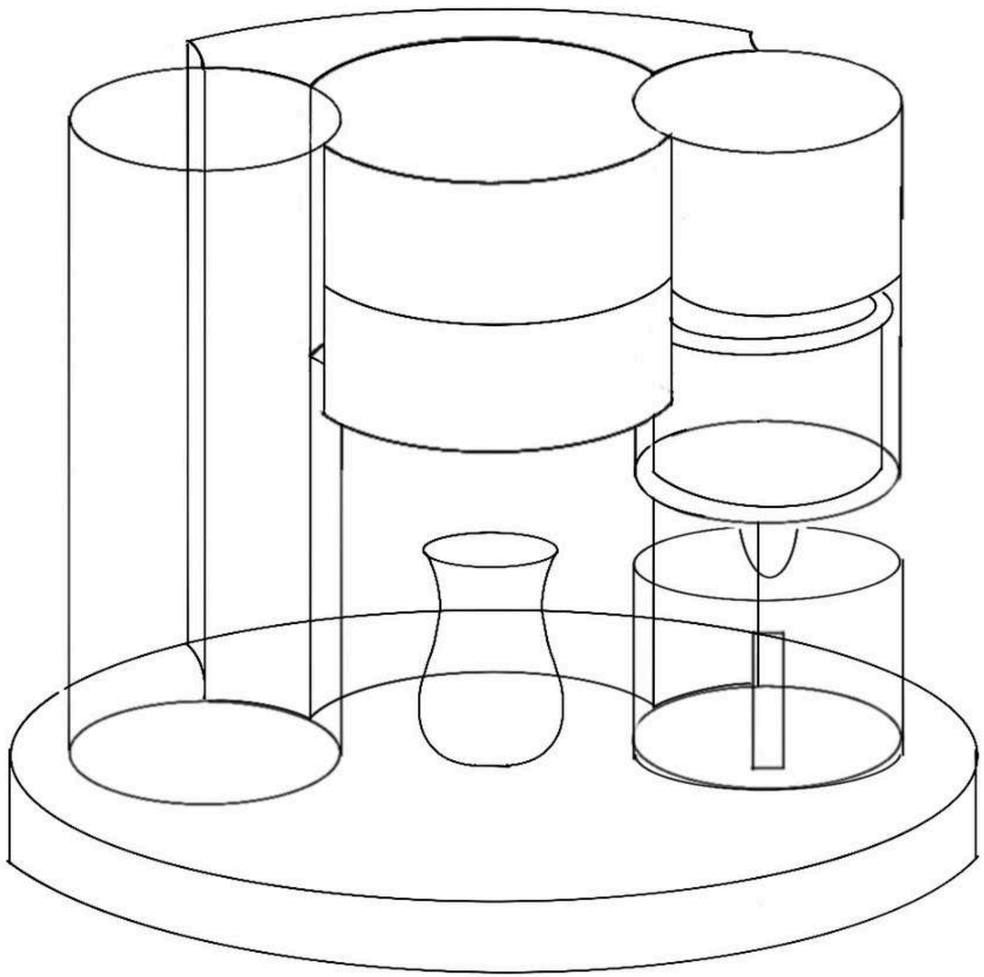

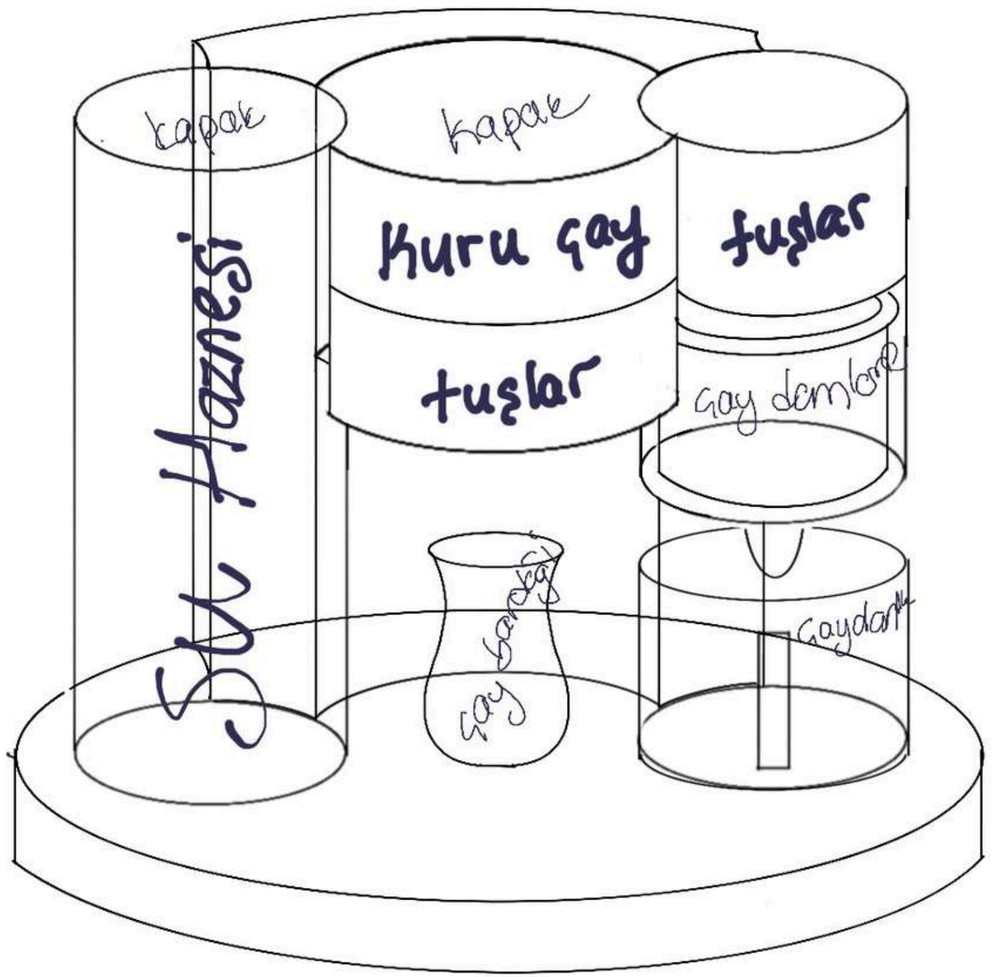

Then I sent this drawing to Gemini and asked them to create a modern design. But I wasn't satisfied with the visual she created.

Therefore, I wrote a more detailed prompt and asked for a different design, and after the corrections, I was satisfied with this design.

I wanted to see it in different colors too, but I didn't like these colors.

Later, to simplify this design, I made another drawing, modeled it, rendered it, and sent it to Gemini for rendering, but after receiving feedback from the instructors, I saw that there were problems with this design and abandoned the idea.

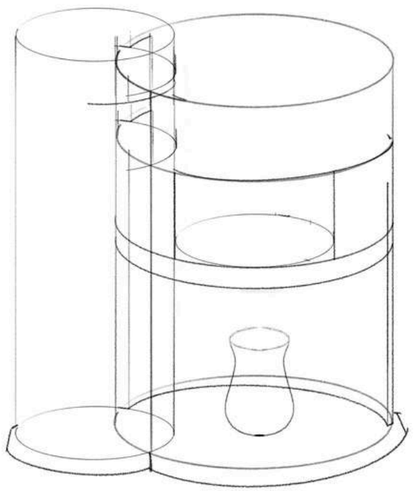

Therefore, I went back to this design and focused on solving the problems in this design, and...

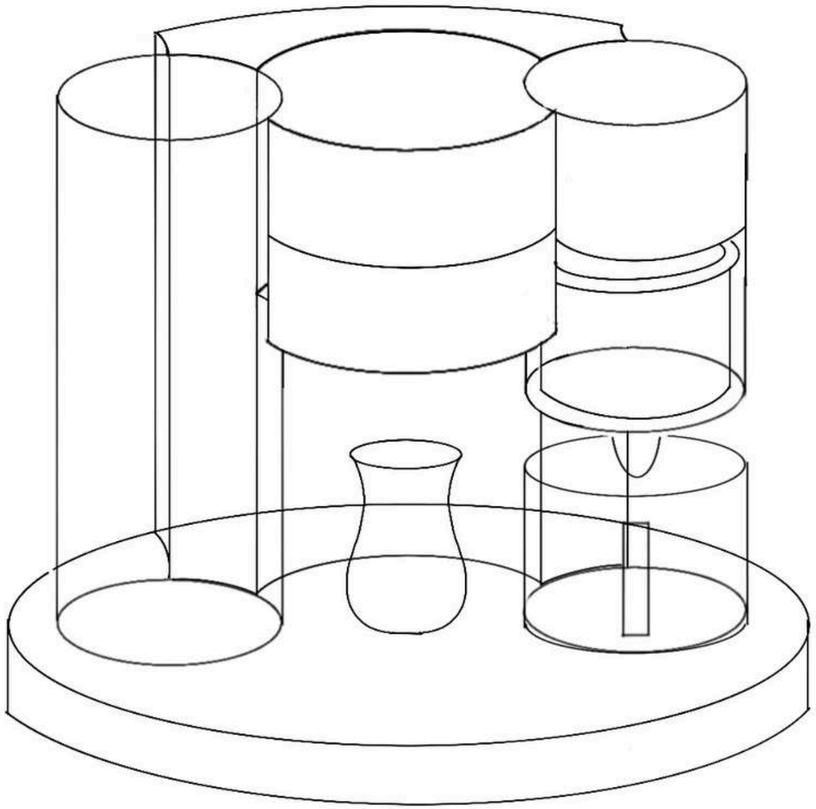

300mm
420mm
220mm
180mm

In this project, I aimed to combine the traditional Turkish tea ceremony with modern design. By redesigning the teapot concept, I created Demista. This machine consists of three parts: first, water from the water reservoir on the left is boiled, then the hot water, along with the tea leaves from the dry tea container on the right, is transferred to the teapot. These controls are managed from the middle section. To preserve the freshness of the tea, it can be transferred to the teapot after brewing if desired or it can be dispense directly into the glass.. The bottom of this teapot has a heater that can be switched on and off as needed. The remaining controls are located in the middle section with touch sensitivity; for example, the on/off switch, tea quantity adjustment, start button, and tea and hot water dispenser. When the button is pressed, the water starts flowing in a fine stream; when pressed again, it stops.. The tea brewing section can be removed and washed after use.

Gemini, ChatGPT, and VizCOM artificial intelligence systems were used in this project.