Özyeğin University

HOT BEVERAGE PREPARING ELECTRONIC DEVICE

Industrial Design Department | 2025 - 2026 Spring Semester

IDEXAI.26 COMMON MODULE

Meltem Karayılan **S034319**

DESIGN JOURNEY & TIMELINE

1. Merging traditional tea culture with futuristic automation.
2. Enhancing textures, lighting, and environmental storytelling
3. Exploring two distinct paths—Industrial Minimalism (Metal) vs. Organic Tech (Wood).
4. Stripping away technical overlays to reveal the core product identity.

- **Key components:** Symmetry & Balance, Warm Minimalism, Tactile Technology, Artisanal Automation, Modular Layout.

AI Reflections

Simplification as a Premium Value: The project’s greatest strength lies in its radical reduction of digital noise. Eliminating unnecessary screens and buttons directly elevated the product’s "premium" feel and sense of serenity.
Material Authenticity: The emphasis on textural accuracy—contrasting walnut grain with steel—transformed the concept from a mere render into a believable, manufacturable industrial design.
Human-Centric Ritual: The design transcends basic functionality; it focuses on the entire ritual, from selecting tea leaves to the final presentation. This shifts the product from a "machine" to an "experience station."
Adaptive Collaboration: The iterative process between the user’s vision and AI optimization demonstrated how creative goals can refine technical constraints to reach an aesthetic "sweet spot."

AI INTERACTION STRATEGY

In this project, the AI (Gemini) & (ChatGBT) acted as your Design Partner. Here is how the roles were assigned:

1

CLARIFIER

Used to define the specific materials (brushed metal, walnut wood) and UI elements (AMOLED screen).

2

EXPANDER

Suggested adding peripheral elements like the side shelves, specific tea bag arrangements, and botanical accents (lemon roses) to add "soul" to the machine.

1

RE-FRAMER

Transformed a "technical blueprint" style into a "high-end lifestyle product" advertisement style.

DESIGN LOGIC & DECISION MATRIX

This table summarizes the evolution of your design choices:

	DECISION	REASIONING
TECHNICAL OVERLAYS	**REJECTED**	Obscured the product's form; detracted from the premium feel.
NATURAL WOOD PANELS	**ACCEPTED**	To counteract the "coldness" of the metal; creates an emotional connection.
GREEN-TINTED WATER	**TRANSFORMED**	Changed from clear water to a botanical green to visually communicate the "brewing" state.
INTEGRATED SHELVING	**ACCEPTED**	Added functionality and allowed the product to own its "ritual space."

IMPACTFUL PROMPTS

The Core Aesthetic (Material & Mood)

"A professional product photography of a minimalist tea station. The design features a premium fusion of brushed stainless steel and walnut wood. The structure follows a clean 'L-shape' modular layout. High-end studio lighting highlights the contrast between the industrial metal surfaces and the organic wood textures. 8k resolution, neutral white background, hyper-realistic."

2. The Minimalist Interface (The 'Two-Button' Focus)

"Detailed shot of a tea station base. Focus on a flush-integrated black glass touch panel on a metallic surface. The panel features only two glowing minimalist icons: a Power symbol and a Heat-Wave (Keep Warm) symbol. No physical buttons, no digital clutter. Sharp focus on the seamless transition between glass and metal, reflecting a 'Warm Technology' philosophy."

3. The Lifestyle & Ritual (Components & Interaction)

"A wide-angle product render of a smart tea station. It includes a clear glass carafe with a wood-accented base and an integrated shelving unit on the right. The wooden shelves are neatly organized with tea packets and small artisanal bowls containing dried botanicals and lemon slices. The carafe is illuminated from the bottom with a soft green ambient light, emphasizing the tea infusion process. Atmospheric yet clean, professional industrial design."

TARGET AUDIENCE: "THE MODERN RITUALIST"

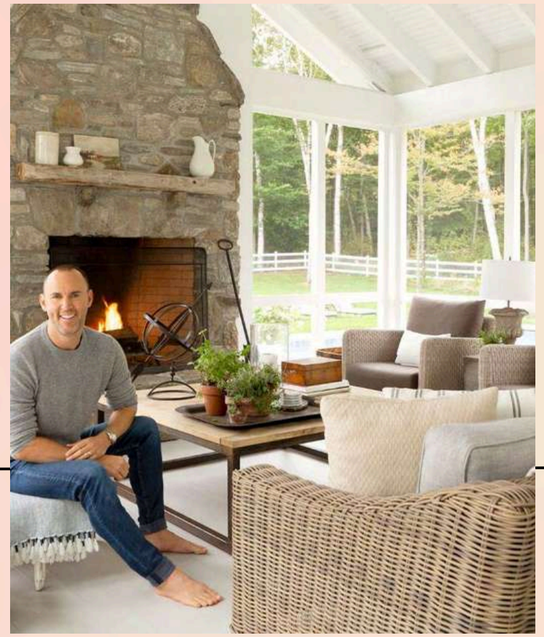

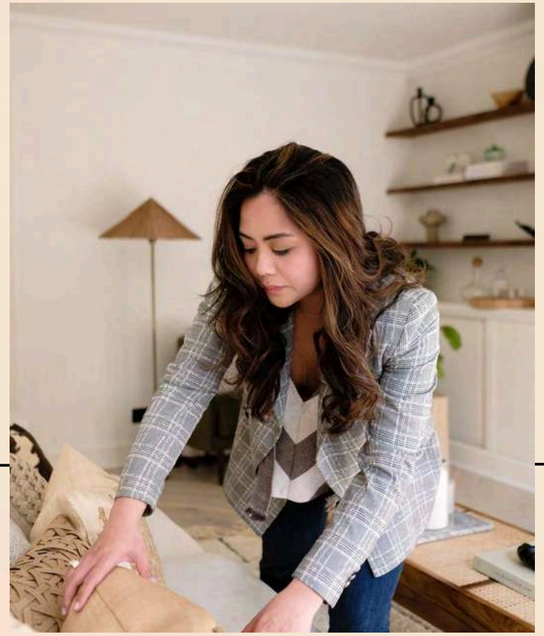

DEMOGRAPHICS

Urban professionals (25-45), eco-conscious consumers, and interior design enthusiasts.

PSYCHOGRAPHICS

Values wellness over speed, prefers natural materials over synthetic ones, and seeks aesthetic harmony in smart home appliances.

USER NEED

A desire to transform a daily routine (making tea) into a mindful, premium experience through "Warm Technology."

NANE
PAPATYA
IHLAMUR
YEŞİL ÇAY
CUSTOM BLEND
YEŞİL ÇAY

NANE
PAPATYA
IHLAMUR
YEŞİL ÇAY
CUSTOM BLEND
YEŞİL ÇAY

INFUSER MECHANISM (CROSS-SECTION)

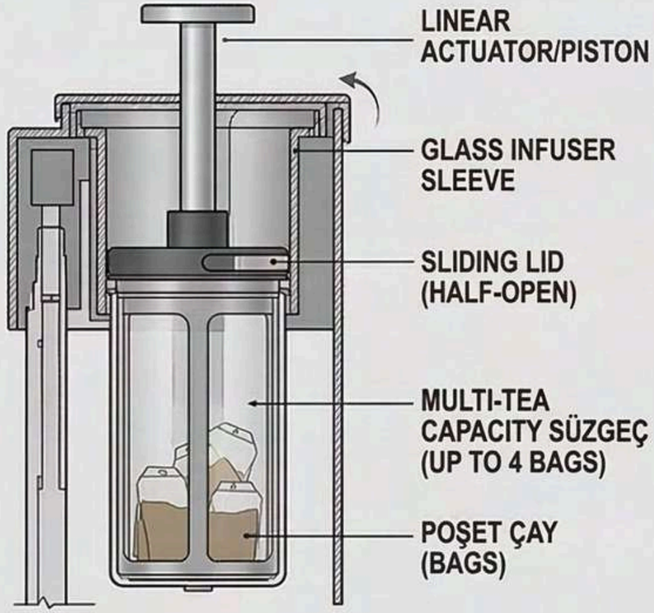

TWO-PART KETTLE LID (TOP VIEW)

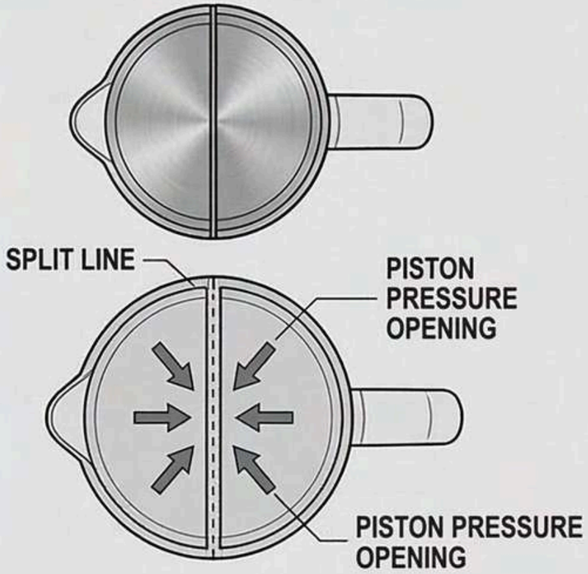

BREWING SEQUENCE

STAGE 1: HOME/SET TIME (UP)

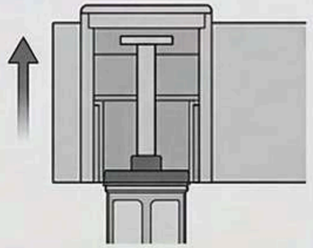

STAGE 2: DESCEND/LID OPEN (PISTON)

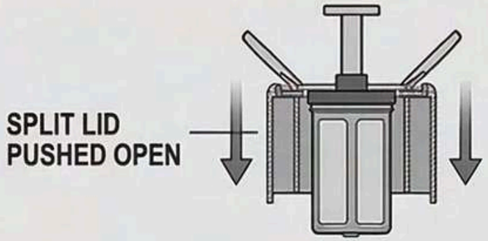

STAGE 3: IMMERSED/BREWING

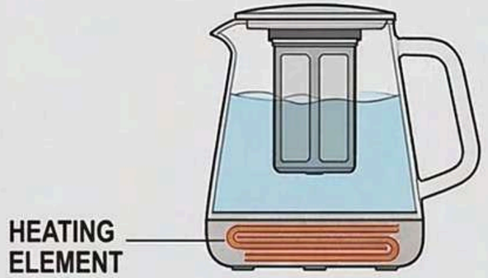

STAGE 4: SQUEEZE & ASCEND/LID CLOSED

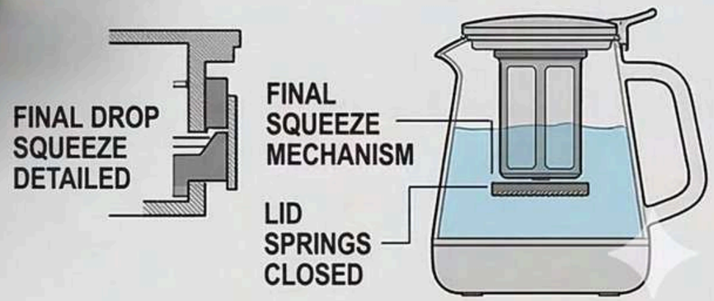

INTERACTIVE TOUCHSCREEN & UI/UX ANALYSIS

1. COUPLED INPUT MECHANISM

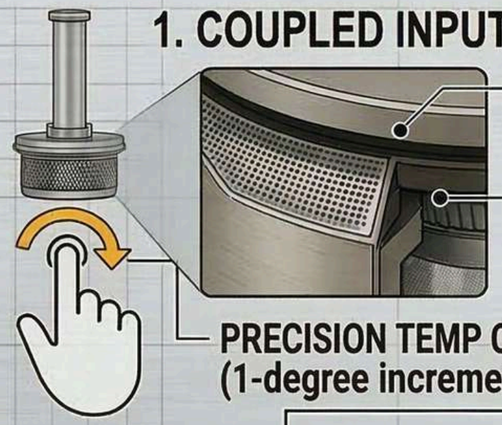

DETAILED OPTICAL ENCODER

CONNECT DECODER & TACTILE DETENT

PRECISION TEMP CONTROL (1-degree increments)

STEP 1: BEZEL ROTATION TOGETHER

STEP 2: STEP SELECTION

2. MENU NAVIGATION LOGIC

STEP 1: CUSTOM TEA SELECTION

TEA TYPE SCROLL LIST

BEZEL CONTROL FOR TEMP

TEA TYPE SCROLL LIST

DELAY START TIME

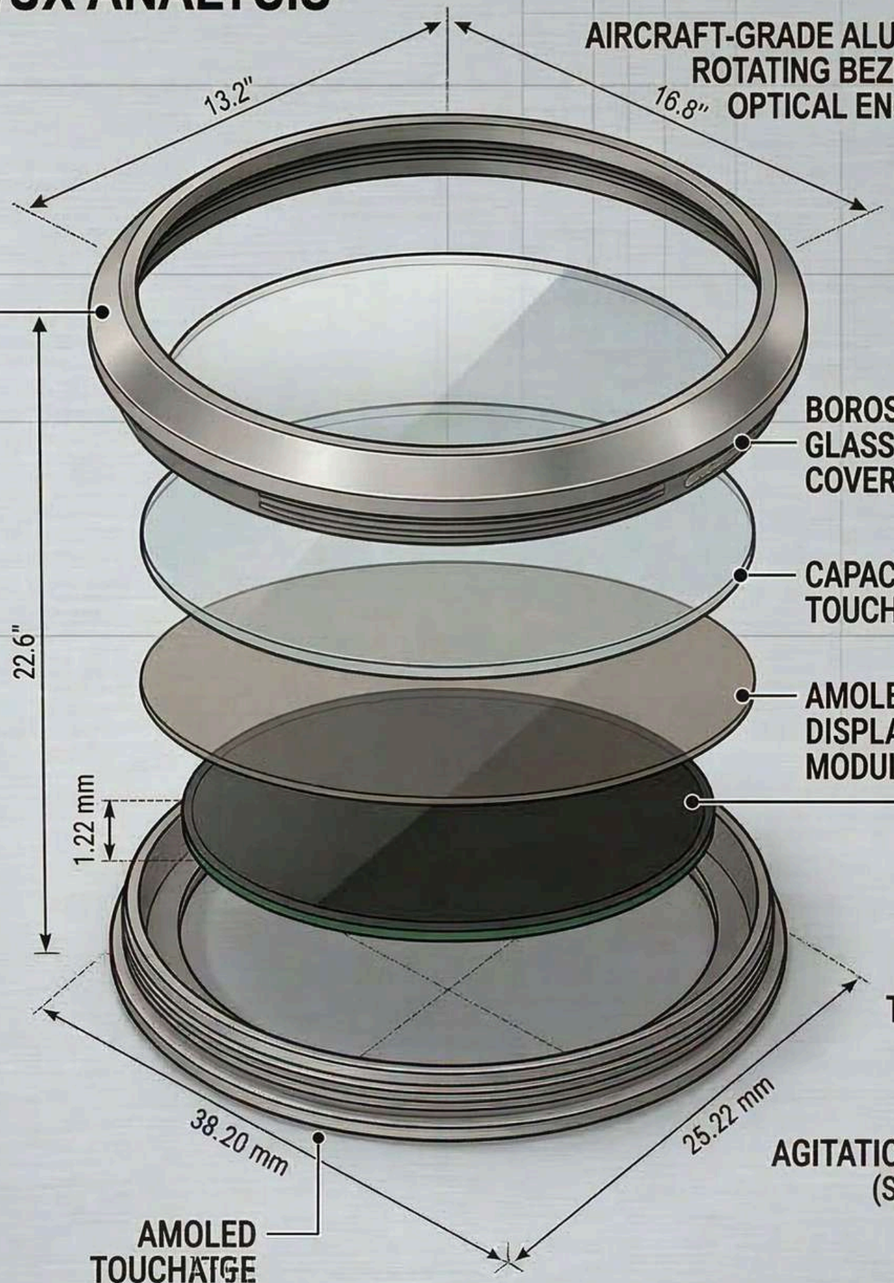

AIRCRAFT-GRADE ALUMINUM ROTATING BEZEL with OPTICAL ENCODER

BOROSILICATE GLASS SCREEN COVER

CAPACITIVE TOUCH LAYER

AMOLED DISPLAY MODULE

AMOLED TOUCHATGE

2. MENU NAVIGATION LOGIC

STEP 1: CUSTOM TEA SELECTION

TEA TYPE SCROLLL LIST

STEP 3: DELAY START TIME

3. ACTIVE BREWING VISUALIZATION

LIVE TEMPERATURE GRAPH

INFUSER AGITATION ANIMATION (Sync with Piston)

START/STOP TAP ZONE

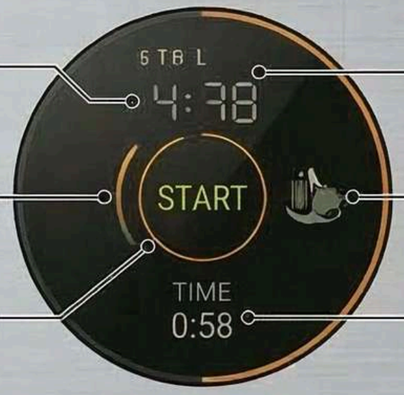

AMOLED SLIRECTION

TOTAL AGITATION GRAPH

TOTAL ELAPSED TIME

LINEAR ACTUATOR PISTON
EXTRACTED BAYONET
LINEAR ACTUATOR PISTON
QUICK-RELEASE MAGNETIC BAYONET CONNECTOR
RETRACTED INFUSER SLEEVE
REFINED, MATTEBLACK CERAMIC HEATING BASE
CUP ZONE INDICATOR
INTEGRATED POWER & CONFIRM TOUCH CONTROLS
TOUCH ZONE
KEEP WARM TOUCH ZONE
WOOD TRIM UI & OPERATION SHOWCASE
INTERACTIVE SCREEN: UI STEP 1-4 VISUALIZED
STEP 1: CUSTOM TEA SELECTION
STEP 2: DELAY START TIME
AFİYET OLSUN
AFİYET OLSUN
75°C'de Sıcak Tutuluyor
CUSTOM AYARI KAYDEDİLDİ
TEA 1
TEA 2
TEA 3
TEA 4
CUP ZONE

INTERACTIVE TOUCHSCREEN NAVIGATION LOGIC & FLOW (BEZEL + TOUCH)
1.1: STEP-BY-STEP USER FLOW
Siyah
Yeşil
Herbal
Custom
Custom
1.1: TEA TYPE SELECTION (TOUCH-ONLY FLOW)
1.2: CUSTOM PARAMETER ACC (TOUCH-ONLY FL
GÜNAYDIN
Siyah
Yeşil
Herbal
Custom
2. MENU NAVIGATION LOGIC
STEP 1: CUSTOM TEA SELECTION
TEA TYPE SCROLL LIST
TEA TYPE SCROLL LIST
DELAY START TIME
BEZEL CONTROL FOR TEMP
2. CONTROL LOGIC SUMMARY
STEP 1: MAIN NAVIGATION HUBS
TEA TYPE SCROLLL LIST
STEP 3: DELAY START TIME
START
KEEP WARM
3. ACTIVE BREWING VISUALIZATION
LIVE TEMPERATURE GRAPH
INFUSER ATION ANIMATION (Sync with Piston)
START/STOP TAP ZONE
AMOLED SLIRECTION
TOTAL AGITATION GRAPH
TOTAL ELAPSED TIME

P USER FLOW
Custom
1.2: CUSTOM PARAMETER ACC (TOUCH-ONLY FL
IC CTION
START
Hemen Başlat
BEZEL CONTROL FOR TEMP
2. CONTROL LOGIC SUMMARY
STEP 1: MAIN NAVIGATION HUBS
TEA TYPE SCROLLL LIST
STEP 3: DELAY START TIME
Siyah
Yeşil
Herbal
Custom
START
KEEP WARM
3. ACTIVE BREWING VISUALIZATION
LIVE TEMPERATURE GRAPH
+1
SAAT SONRA
INFUSER N ANIMATION nc with Piston)
TART/STOP TAP ZONE
AMOLED SLIRECTION
TOTAL AGITATION GRAPH
TOTAL ELAPSED TIME

INTERACTIVE TOUCHSCREEN NAVIGATION LOGIC & FLOW (BEZEL + TOUCH)
1.1: STEP-BY-STEP USER FLOW
Siyah
Yeşil
Herbal
Custom
Custom
1.1: TEA TYPE SELECTION (TOUCH-ONLY FLOW)
1.2: CUSTOM PARAMETER ACC (TOUCH-ONLY FL
Parameter Setup
Custom Tea
°C
03:4
DK
2. MENU NAVIGATION LOGIC
STEP 1: CUSTOM TEA SELECTION
TEA TYPE SCROLL LIST
TEA TYPE SCROLL LIST
DELAY START TIME
BEZEL CONTROL FOR TEMP
2. CONTROL LOGIC SUMMARY
STEP 1: MAIN NAVIGATION HUBS
TEA TYPE SCROLLL LIST
STEP 3: DELAY START TIME
START
KEEP WARM
3. A ING VISUALIZATION
LIVE TEMPERATURE GRAPH
INFUSER TION ANIMATION (Sync with Piston)
START/STOP TAP ZON
AMOLED SLIRECTION
TOTAL AGITATION GRAPH
TOTAL ELAPSED TIME

MOL
Süzgeç İniyor...