IDE 202 | DESIGN STUDIO
2025 - 2026

Portable Tea Preparation Device for Marine Environments

Emre Bediroğlu
S039946

Prototype

Prototype Design

- Portable kettle and thermos hybrid
- Integrated tea infuser inside the lid
- Vacuum base to prevent sliding
- Ergonomic handle for one-hand use
- Designed for direct drinking

The prototype combines a kettle and a thermos into a single device. It includes an internal tea infuser and a vacuum base that helps the device stay stable on moving surfaces such as boat decks.

Testing

Prototype Testing

- Stability test on moving boat surface
- Vacuum base grip test
- One-hand operation test
- Direct drinking usability test

Several quick tests were conducted to simulate real boat conditions. The tests focused on stability, grip of the vacuum base, one-hand usability and the experience of drinking directly from the device.

AI Response Summary

• AI suggested combining vacuum insulated thermos technology with an electric kettle system to create a portable hot beverage device. It highlighted key design factors such as stability in moving environments, spill prevention, energy efficiency, and compact structure. The responses also emphasized the importance of a non-tipping base, safe heating system, and user-friendly interaction for preparing herbal tea in small spaces like boats or kayaks.

Accepted, Rejected & Transformed Ideas

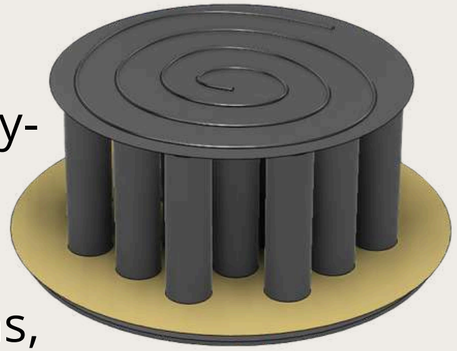

During the design process, several ideas suggested by AI were evaluated critically. Stability-focused features such as a non-tipping base and a compact portable structure were accepted because they directly addressed the challenges of preparing hot beverages in moving environments. Some ideas, such as large kettle-like forms or complex mechanisms, were rejected due to portability and usability concerns. Other suggestions were transformed by adapting them into a hybrid kettle-thermos concept that allows users to heat water and prepare herbal tea safely in small and dynamic spaces like boats or kayaks.

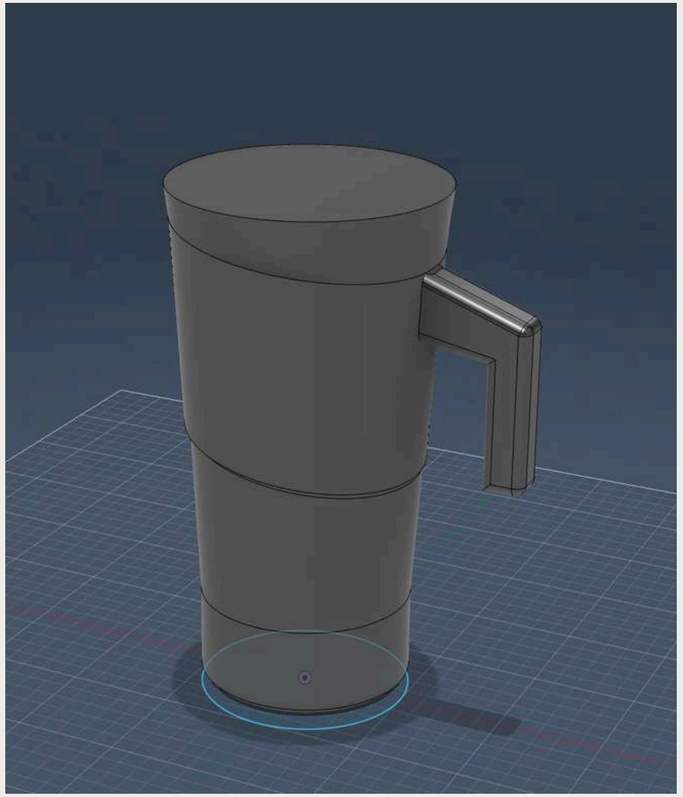

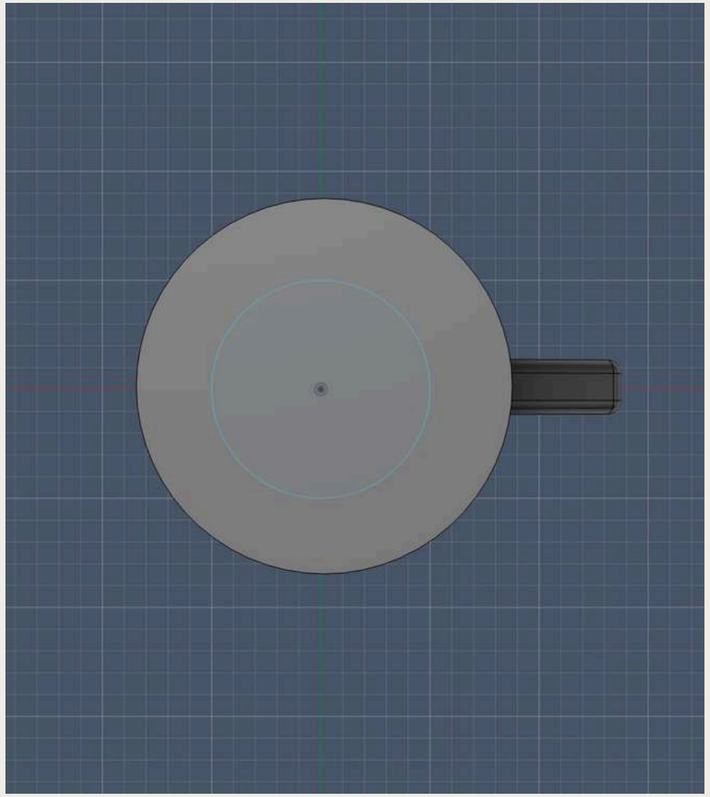

Design Improvements & Final Design

- Vacuum Base System

A wider vacuum base was integrated to improve stability and prevent sliding on moving boat surfaces.

- Leak-Proof Lid Mechanism

A sealed and secure lid system was developed to reduce the risk of spilling during movement.

- Ergonomic Handle Design

The handle was refined to provide better grip and allow safe one-hand operation in unstable environments.

Design Improvements & Final Design

• Direct Drinking Feature

The design allows users to drink directly from the device without needing a separate cup.

• Insulated Body Structure

A double-layer insulated body was implemented to reduce heat transfer and improve user safety.

• Compact Portable Form

The final form was optimized for portability and ease of use in small marine environments.

Accepted, Rejected & Transformed Ideas

During the design process, several ideas suggested by AI were evaluated critically. Stability-focused features such as a non-tipping base and a compact portable structure were accepted because they directly addressed the challenges of preparing hot beverages in moving environments. Some ideas, such as large kettle-like forms or complex mechanisms, were rejected due to portability and usability concerns. Other suggestions were transformed by adapting them into a hybrid kettle-thermos concept that allows users to heat water and prepare herbal tea safely in small and dynamic spaces like boats or kayaks.