DESIGN MILESTONE

IDE202.A

Project ID Number: 52

TIMELINE

FINAL MODEL

EMPATHIZE

AI's Role: Clarifier
AI Tool Used: ChatGPT

INPUT

Prompt:

I want to conduct a short survey to better understand how people generally consume and prepare tea/coffee. For example, I'm considering questions like: "How many cups of tea/coffee do you drink per week? Do you consume more tea or coffee varieties (which type)? What is the most common problem you encounter when brewing coffee/tea? Do you think the functions of coffee machines are sufficient? If not, what feature would you like to add? Can you make some regional coffee flavors (dibek, menengüç, mırra) using an electric machine (is there a machine that meets your needs?)" I want to create a survey with approximately 15 questions like these. I'm looking for questions I might have overlooked that are crucial to the design process.

OUTPUT

AI Text Summary

The survey explores tea and coffee consumption habits, preparation environments, current equipment, user frustrations, desired machine features, and interest in regional drinks. It first identifies how often people drink tea/coffee, whether they prefer tea, coffee, or both, and which varieties they regularly consume to understand versatility needs. It then examines where drinks are prepared (home, office, café) and how much time users are willing to spend, which helps determine requirements for speed, automation, and usability. Questions about current equipment (kettle, cezve, coffee machines, etc.) and what users like about their setup reveal both existing solutions and features worth preserving. The survey also focuses on key pain points such as taste inconsistency, incorrect temperature, long preparation time, and especially cleaning, identifying which step in the process is most frustrating. It further evaluates how well current machines meet user needs and which features users prioritize, such as easy cleaning, compact size, customization, speed, and the ability to prepare regional coffees. Finally, it investigates interest in making traditional coffees like dibek, menengiç, or mırra with electric machines and the barriers preventing this, while also exploring emotional aspects such as the meaning of a perfect cup, the balance between ritual and convenience, and preferences for manual control versus automation.

INPUT

Prompt:

You are my design research discussion partner. Context: I am designing a countertop electronic device that prepears at least one hot beverage. My draft user: Aged25-35, enjoys taking time oneself,savors local coffees, and has a curiosity about them./My use context:in indoor use(house/kitcheen) takes a break to relax after a busy day. Here are my survey data: Its include only 25-35 aged data. (attached).Tasks: Extract 6 observable behavior patterns grounded strictly in my notes. Avoid iinterpretation beyond what is stated. Write 4 insight using this stucture: In(context, the user needs(need), but(tension) because(reason grouned in notes) List 5 assumptions I may be making. Clearly mark them as assumptions. Suggest 3 follow up survey questions thet reduce uncertainty in my current understanding. Output:Use concise bullet point. Seperate "observed from inferred". Do not invent missing facts.

Attachments: Survey results

Survey Link: https://forms.gle/hqwDrkQw5UovtBgp8

OUTPUT

AI Text Summary:

Survey data shows that many users consume tea or coffee daily (often 3+ times), mostly during work or around midday, typically at home or in offices, though cafes are still used to avoid preparation effort. Users frequently drink multiple beverage types, including tea, standard coffee, and local coffees such as Türk kahvesi, menengiç, dibek, and mirra. Most prefer very short preparation times (under 5 minutes, often under 2). Cleaning is the most commonly reported pain point, described as the most stressful step, the most frequent problem, and a reason to avoid using machines often; wrong temperature and taste inconsistency are also recurring issues. Users value fast, practical machines with ready alerts, and while current machines are considered mostly sufficient, frustrations remain around temperature control, noise, cleaning difficulty, and slow operation. Many users also avoid or fail to prepare regional coffees with electric machines because suitable devices or guidance are lacking, suggesting a need for quick, consistent, low-effort preparation and better support for local coffee types.

REFLECTION

I prepared my survey questions with the help of AI Because I explained things well to the AI and gave it sample questions, telling it what kind of questions I wanted, it generated exactly the kind of questions I wanted.

DECISION

I completed the survey and sent it to the participants. Based on this data, I analyzed overlapping problems and events quickly thanks to AI .

DEFINE

To better present the project, I asked Gemini about the characteristics, preparation methods, and strength adjustments of different coffees. After verifying the accuracy of the information, I asked it to create a poster summarizing the findings.

DEFINE

AI's Role: Re-framer

AI Tool Used: ChatGPT

INPUT

Prompt:

Review my notes: Multiple uses Evidence type: Observation Fact: While making tea, she put the water in the kettle and waited for it to boil elsewhere. During that time, she fiddled with her phone. Why it matters: Since the process would take a long time, she busied herself with other things. Measure: She waited approximately 3-5 minutes. CONTEXT: SLOW LIVING In this context, users tend to run machine quietly when seeking calm. In this context, users tend to enjoy their drink when getting away from the day's fatigue. In this context, users tend to drink different types of coffee when they get bored of the same thing . Insight 1 In indoor, at-home break moments, the user needs a quick and effortless way to prepare tea/coffee, but preparation often becomes stressful because cleaning and waiting are repeatedly marked as the most annoying steps. Insight 2 In daily routines where tea/coffee is consumed multiple times, the user needs consistent taste and correct temperature, but experiences dissatisfaction because "wrong temperature" and "taste inconsistency" are common problems reported. Insight 3 In moments of relaxation after work, the user needs preparation to feel pleasant and ritual-like, but machines turn it into a chore because current devices are described as noisy, slow, or hard to run. Hard interface: Impact:5 /Frequency 4 Operating Sound: Impact:3 /Frequency4 Opportunity Areas: Improve interface to do it faster and less stressful for user who wants to be pleasant. Improve sound quality to have silence for user who tired and wanting to rest. Insight 4 In interest toward local/regional coffees, the user needs guidance or support to prepare them properly, but avoids or fails at making them because users report unsuccessful attempts or lack of suitable machines. Hard interface/Hard to Understand: Impact:5 /Frequency 4 Failure to do so Properly: Impact:4 /Frequency 5 Opportunity Areas: Improve interface to do it faster and less stressful for user who wants to be pleasant. Improve to ensure it is done correctly to drink more quality coffee for user The taste of coffee is very important to her/him. I generated ınsights output working with artificial intelligence(not impact and frequency part). Problem Framing Draft1 For user who aged 25-35, enjoys taking time for oneself, savors local coffees and has a curiosity about them in indoor environment, who needs take a break to relax, current systems fail to make quality local coffees, which leads to makes her/him lose interest in coffee. You are my partner in this project. Therefore, review the Problem Framing Draft 1 wrote and figure out how to improve it.

OUTPUT

AI Text Summary:

Your Problem Framing Draft has a strong base because it clearly defines the user group (25–35), context (indoor/home breaks), and interest in local coffees, and correctly frames the issue as a system failure rather than a user failure. However, it needs improvement because the consequence "losing interest in coffee" is too strong, while your data actually shows stress, avoidance, and frustration. It also misses key friction points identified in your insights, such as cleaning difficulty, waiting time, noise, complex interfaces, and fear of preparing drinks incorrectly. Additionally, "quality local coffee" is vague, since the real problems involve wrong temperature, inconsistent taste, lack of guidance, and unsuitable machines. Finally, the slow-living context should be emphasized more by contrasting users' desire for calm, ritual-like moments with machines that feel noisy, effort-heavy, and stressful. A stronger framing should therefore focus on stressful preparation disrupting relaxing rituals and causing users to avoid making local coffees despite their interest.

REFLECTION

AI has improved my problem framing draft in a great way.

DECISION

I can move on to the ideation stage.

Rejected & Transformed

At this stage, AI broadened my perspective. However, in my research, I observed that people outside the 25-35 age range also enjoy consuming regional coffee. Therefore, I decided to create a design that targets everyone who loves regional coffee, rather than a specific age range.

IDEATE

AI's Role: Render(Expander)

AI Tool Used: ChatGPT

Early Design Concepts:

REFLECTION

Overall, this AI did a very good job. However, it just couldn't do the job the way I wanted with the last photo.

DECISION

There are shortcomings in my prompt , which resulted in inadequate visualization. It could have been better.

AI's Role: Clarifier

AI Tool Used: ChatGPT

INPUT

Prompt:

```
Briefly compare the preparation methods of dibek, menengiç, mırra, and Turkish coffee. Are they cooked over low heat, and how are they prepared?
```

OUTPUT

AI Text Summary:

```
Turkish Coffee: Very finely ground coffee brewed in a cezve with 1 tsp coffee per cup of water over low–medium heat for 2–4 minutes. It is stirred and foamed, aiming for a frothy and balanced taste.
Dibek Coffee: Coarser and uneven grind because it is crushed in a mortar. Brewed in a cezve over low heat, slightly longer than Turkish coffee, producing a smoother taste and thicker consistency with less foam.
Menengiç Coffee: Made from wild pistachio (not coffee beans) in powder or paste form, usually prepared with milk in a cezve over low heat for 3–5 minutes, resulting in a creamy, caffeine-free drink with minimal foam.
Mırra: Finely ground coffee that is boiled multiple times, strained, and reboiled (not typical cezve brewing). It takes much longer to prepare and produces a very strong, concentrated, and bitter coffee used in ritual contexts.
```

REFLECTION

AI provided general information. I will verify the information it provided.

DECISION

I decided that ı will conduct more detailed research.

En Önemli Pişirme Farkları (Özet)

Kahve	Öğütme	Sıvı	Ateş	Süre
Türk	Çok ince	Su / Süt	Orta	2–3 dk
Dibek	Biraz iri	Su	Orta → kısık	2.5–3 dk
Menengiç	Macun/paste	Süt veya su	Kısık	2–2.5 dk
Süryani	Çok ince (x2) ↳Tekrar kaynatılabilir (köpük aldıktan sonra)	Su	Kısık	~3 dk

Powered by [Cite: 1, 2]

IDEATE

AI's Role: Re-framer
AI Tool Used: ChatGPT

INPUT

Prompt:

Is it possible to do these things on a machine?

OUTPUT

AI Text Summary:

Turkish coffee is the most suitable for electric machines because it requires slow controlled heating and foam control, which many Turkish coffee machines already provide. Dibek coffee is partially suitable, but its coarser grind and denser texture may cause sediment or overflow, so it works better with a special mode using lower heat and longer brewing time. Menengiç coffee can also be prepared in machines, but it requires careful control because it is often made with milk and has a paste-like texture, meaning machines need milk-safe heating or stirring to prevent burning or overflow. Mırra, however, is difficult to prepare with standard machines because it requires multiple boiling stages, straining, and long concentration, so it would need a specialized brewing system to replicate the traditional method.

REFLECTION

During this process, I got to know regional coffees closely and thought about how I could integrate them into my design. All of them are suitable for machine use, except for mırra coffee, which requires a very long brewing time (approximately 4-6 hours), so I decided it wasn't suitable for machine use.

DECISION

Instead of mirra coffee, I decided to add another regional coffee, Süryani coffee, to the machine.

Symbols I used in the design:

BEREKET :

1.Grup: Dut, karpuz, kavun, nar, incir, üzüm, bitki ve yılan, ejder, koç, boğa, geyik, kelebek, balık gibi, hayvanlardan oluşan formda bereket motifleri sonsuz mutluluğu ifade eder.

2.Grup: Ağaç, çiçek, yaprak motiflerinden oluşur. Hayat ağacı Bereket ve bolluk simgesi. Nar Bereket sembolü.

3.Grup: Cansız kayalar, sular, dağlar ve bazı doğa varlıklarından oluşur.

SUYOLU :

Su, yeniden doğuşun, bedensel ve ruhsal yenilenmenin, yaşamın sürekliliğinin, bereket, soyluluk, bilgelik, saflık ve erdemin sembolüdür. En etkin arinma semboludur. O hem yasamin hem de ölümün kaynağıdır. Anadolu'da su yaşamin kendisidir. Anadolu kadinin butun gün iç içe yasadigi su dokumalara motif olmustur. Su yasami simgeler. Pişmiş topraktan yapılmış çanak çömleklerde zigzag veya meander diye adlandırılan su yolu motifleri uygulanmiştır.

Meander motifi ejder ile simgesel bir anlam bütünlüğü içindedir. Ismini Ege denizine dökülen Menderes (Meandrosmenader) Nehir'inden almistir.

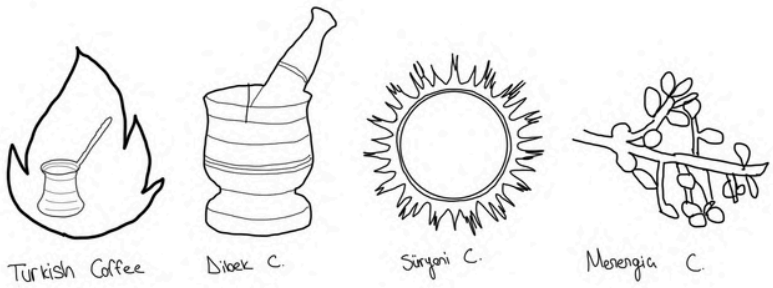

PROTOTYPE & TEST

AI's Role: Critique
AI Tool Used: ChatGPT

INPUT

Prompt:

How can I add a feature to electric Turkish coffee machines so that they stir the coffee first? (I put in the water, then the coffee, and then I start the machine without stirring.) I want the machine to stir it first. How can I figure out this system? Suggest a solution as if you were my partner.

OUTPUT

AI Text Summary:

1. Magnetic Stirrer (The Cleanest Solution): Uses a shaft-free, silent magnetic bar for easy cleaning; ideal for premium machines, though the bar can be lost.
2. Micro Propeller (Controlled Mini Motor): Guarantees a homogeneous mix at a low production cost, but is difficult to sanitize and prone to mechanical failure.
3. Vibration Mixing (Innovative Approach): Uses micro-vibrations to dissolve lumps without internal moving parts, preserving foam and maximizing hygiene.
4. Heat Shock + Micro Pulse (Most Minimal Solution): Relies on convection currents to mix without mechanical parts, though it is the least reliable for total lump removal.

My Product Strategy: I would implement a Magnetic Stirrer with a 5-second software-controlled cycle, integrated with a foam sensor and a user-toggled "Automatic Pre-Mixing" option for maximum efficiency.

INPUT

Prompt:

So, realistically speaking, what solution can be integrated into a coffee machine?

OUTPUT

AI Text Summary:

1. Vibrating Pre-Mixing (Most Realistic): The most industrially feasible solution for mass markets. It uses a low-cost LRA or micro-vibration motor, requires no extra internal parts, eliminates leakage/cleaning issues, and has zero impact on foam or the production line.
2. Magnetic Stirrer (Medium Realism): A premium, hygienic choice for high-end smart machines. While it offers a "high-tech" feel and no physical shaft, it increases costs and introduces the risk of the user losing the stir bar.
3. Micro Propeller (Most Difficult): Technically possible but risky due to Turkish coffee's sediment. It faces challenges with shaft leakage, coffee buildup, and long-term mechanical failure, making it the least practical for durability.

Final Brand Strategy: Use Vibration for mass-market efficiency, Magnetic for premium innovation, and avoid the Propeller due to maintenance hurdles. From a design perspective, vibration is the logical winner as it improves the product without the user even noticing.

REFLECTION

At this stage, the engineering aspect confused me a lot. I used artificial intelligence to help me with the internal structure of the machine I was going to build. But later, as a result of my research, I realized that instead of adding a mixing feature, the problem could be solved by having separate water and coffee reservoirs in the machine and dispensing them in a measured and balanced way.

DECISION

I decided to have a water and ground coffee reservoir in my coffee machine. This allows the user to choose their desired strength (mild/medium/strong). Additionally, since the water and coffee are dispensed in a balanced manner, no extra mixing is needed (the water is delivered under pressure). I decided that the coffee pot would be made of 304 stainless steel, and the main material of the machine would be ABS plastic.

Rejected & Transformed

I won't be using the AI's suggestions because it would make the structure too complex and create problems in terms of both design and implementation. Instead, based on my research, I will place a water and ground coffee container in the machine and brew it without stirring, but by dispensing the water proportionally, preventing clumping.

FINAL MODEL

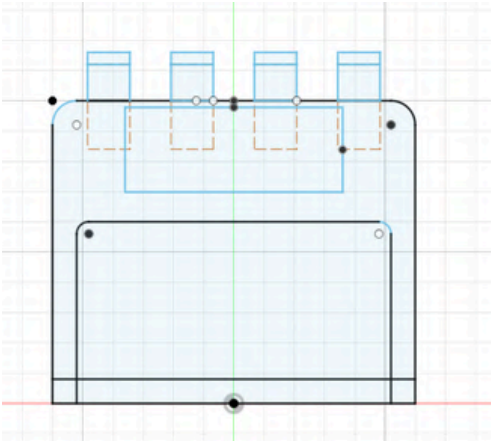

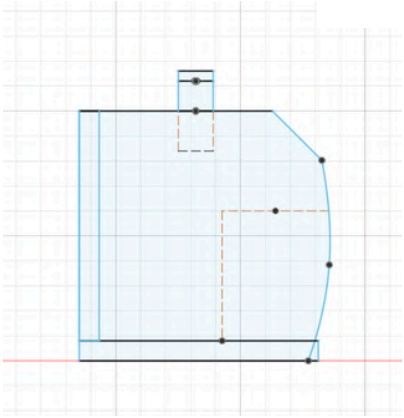

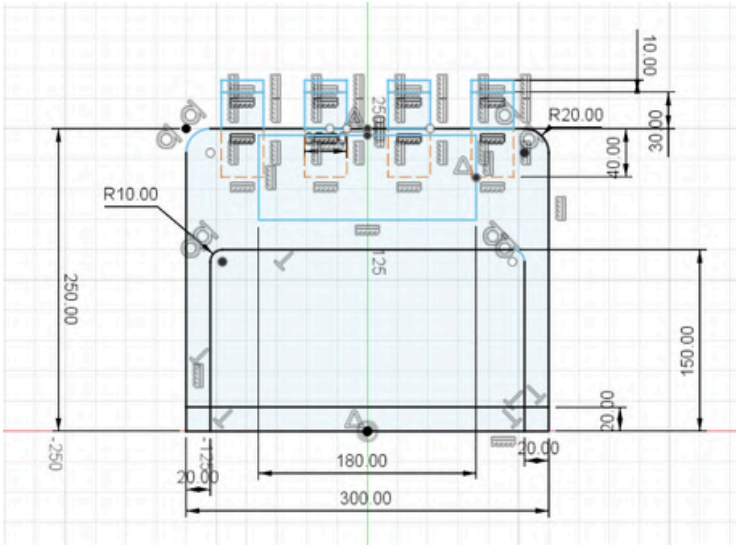

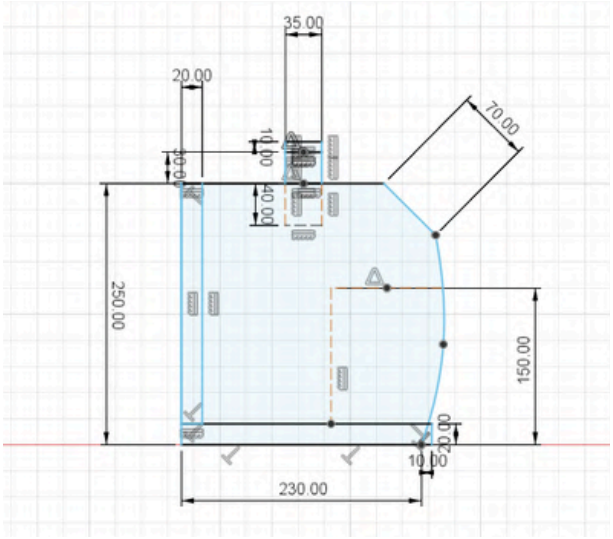

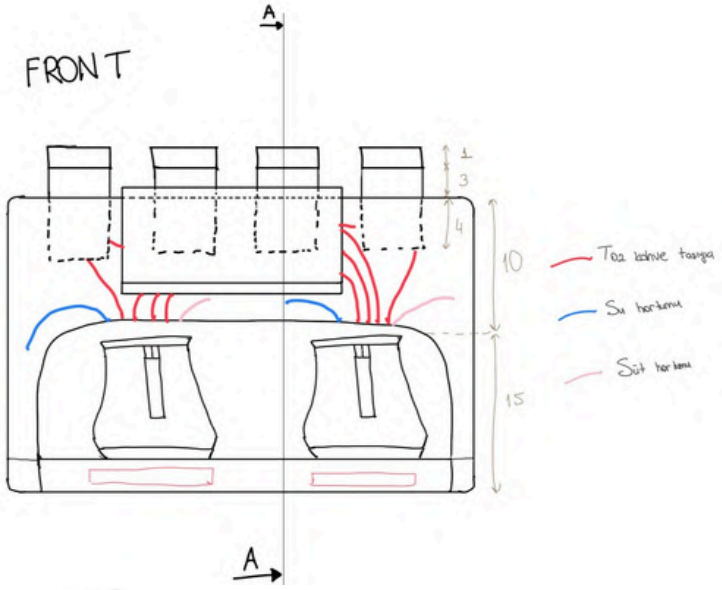

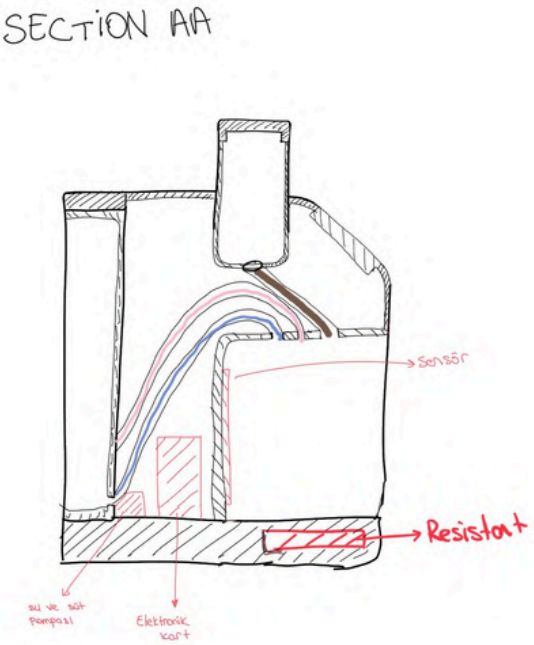
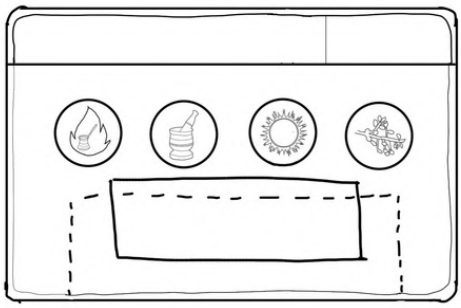
TOP