SALEP PREPARATION MACHINE

This document presents the design development of a compact salep preparation machine. The project focuses on simplifying the heating and preparation process while creating a visually clear and practical product concept.

A compact machine designed to both prepare and heat salep, making the traditional beverage easier to serve in coffee chains.

LARA KARAŞAL
IDE 202 S034457

DESIGN PROBLEM

Existing machines only keep salep warm

- Salep preparation requires an additional stove process
- This makes service slower and less practical
- Salep is therefore less common in chain coffee shops

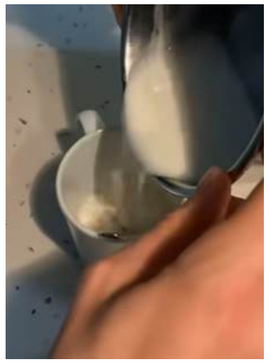

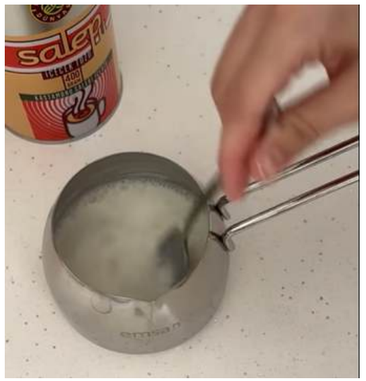

Design Opportunity

This project explores the opportunity to design a machine that can both prepare and heat salep within a single system.

RESEARCH INSIGHTS & KEYWORDS

Research on existing salep machines, user comments, and interviews revealed several important insights. Most machines are designed mainly for keeping the beverage warm rather than preparing it. The preparation of salep usually requires a separate cooking process on a stove, which makes the service process more complicated. This indicates a design opportunity for a system that can simplify both preparation and heating within a single product.

Salep is a concentrated drink.

Mixing is important.

It needs to be prepared fresh.

merhaba makinenin içine salebi pişirip mi koyacağız pişirme özelliği var mı teşekkürler

**** **** • 20 Ekim 2025

EnuygunBizde satıcısının cevabı • 38 dakika içinde cevaplandı.
pişmiş ürünü koyup burda sıcak tutacaksınız efendim

Bu suyu ısıtır mı kendi Sıcak mı koymamız lazım

**** **** • 17 Ekim 2024

EnuygunBizde satıcısının cevabı • 2 saat içinde cevaplandı.
sıcak tutmaya yarar ısıtır

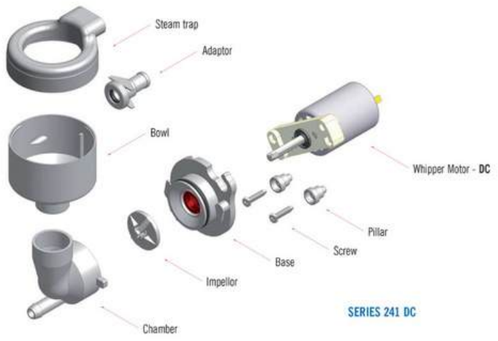

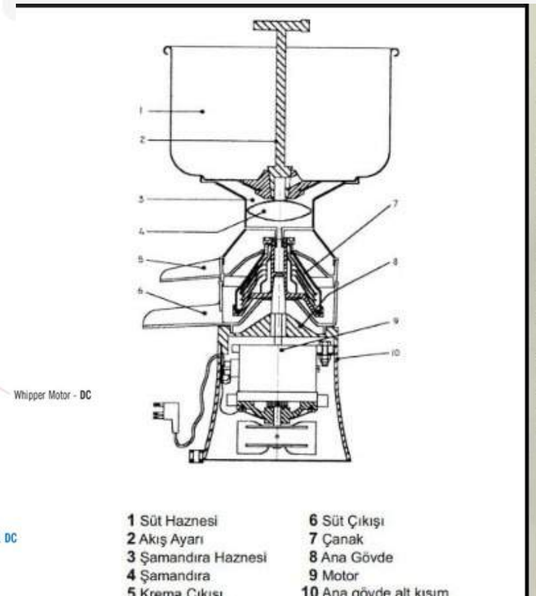

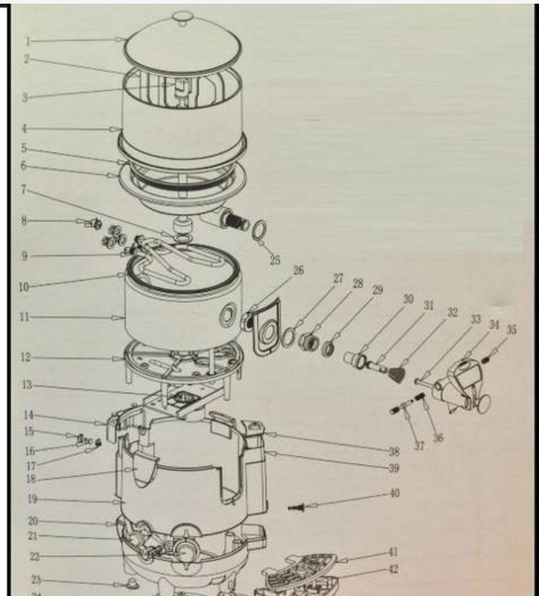

CONCEPT EXPLORATION

Structurally, it resembles a mosque and is very complex.

It's structurally nice, but I haven't been able to get the milk system working properly.

I couldn't fit the milk compart ment.

It has no appeal.

AI SUPPORTED EXPLORATION

ChatGPT Auto >

peki 9 litre için olan ölçüler bunlar ben 2 litre en fazla olsun istiyorum TEKNİK ÖZELLİKLER
Ürün Ölçüleri: 400x350x520 mm
Ağırlık: 5,5 kg
Kapasite: 9 lt
Güç: 1100W 2litreye göre ölçüleri nasıl olmalı sebepleriyle anlatabilirmisin

Birkaç saniye düşündüm >

Evet. 9 litrelik makineyi **aynı tipolojide 2 litreye düşürürsen** ölçüler **oranlı küçülür ama birebir aynı oranda küçülmez**. Çünkü alt gövdede motor, rezistans, musluk ve kontrol paneli belli bir minimum yer kaplıyor.

Bu yüzden 2 litre için en mantıklı yaklaşım:

- **hazneyi ciddi küçültmek**
- **yüksekliği azaltma**

size and material recommendation

2) 2 litre için önerdiğim gerçekçi ölçüler

Bu tip bir tezgâh üstü makine için bence en mantıklı aralık:

Öneri A — Dengeli kompakt boyut

- **Genişlik: 240–260 mm**
- **Derinlik: 280–300 mm**
- **Yükseklik: 360–400 mm**

Ben sana net bir öneri vereyim:

Önerilen 2 L ölçü:

250 × 290 × 380 mm

Bu ölçü çok mantıklı olur.

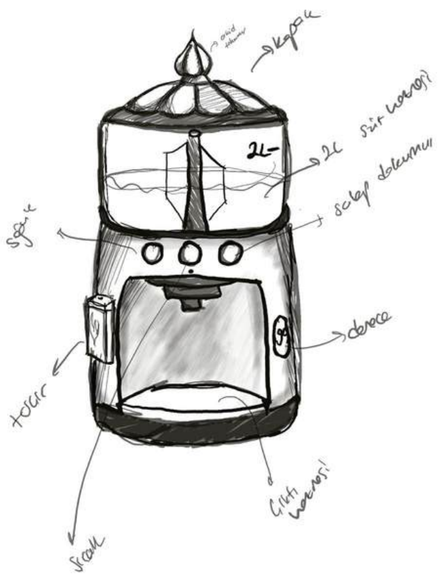

create images

ChatGPT Auto >

peki bu manyetik olaykaç liteye kadar iyi bir karıştırıcı görev yapabilir

Birkaç saniye düşündüm >

Kısaca: **manyetik karıştırma küçük hacimlerde çok iyi**, hacim büyüdükçe zayıflar.

Senin proje için en önemli cevap şu:

Salep gibi kıvamlı bir ürün için

en güvenli çalışma aralığı yaklaşık 0.5–2 litre
iyi tasarlanırsa **2–3 litreye kadar** düşünülebilir,
ama **3 litreden sonra risk artar,**
5 litre ve üstünde klasik mil/paletli mekanik karıştırıcı daha mantıklıdır.

Nedenini çok basit anlatayım:

Manyetik karıştırma neden

explore the different methods

ChatGPT Auto >

5 litre ve üstünde klasik mil/paletli mekanik karıştırıcı daha mantıklıdır.

Nedenini çok basit anlatayım:

Manyetik karıştırma neden bir yerde yetersiz kalır?

Çünkü alttaki mıknatıs, üstteki karıştırıcıyı **temas etmeden** döndürür.
Hacim büyüdükçe 3 şey zorlaşır:

1. Sıvı ağırlaşır
Daha çok sıvıyı döndürmek gerekir.

2. Kıvam artar
Salep süt gibi akışkan değil; daha yoğun. Yoğunluk arttıkça manyetik bağ daha kolay "kaçırır".

3. Yükseklik artar
Hazne yükseldikçe tabandaki manyetik etkinin üstteki akışa etkisi azalır.

FINAL CONCEPT DIRECTION

During the design process, different mixing methods were explored; however, due to the starchy and thick nature of salep, many techniques could not effectively prevent sedimentation. Therefore, the design follows a simpler system similar to existing salep machines that rely mainly on heating. To improve the workflow in coffee shops, a cinnamon container was integrated into the machine, allowing baristas to adjust the amount according to customer preferences.
Stainless steel was selected for the body of the machine because of its durability, hygiene, and common use in beverage equipment. For the preparation chamber, a lightweight Tritan container was preferred. Tritan is a heat-resistant and food-safe plastic that is lighter than glass, making it easier for employees to remove an chamber at the end of the day.

The color palette combines white with traditional salep machine tones to reflect the winter atmosphere and the cultural identity of salep. Additionally, both hot and cold mixing functions were considered to reduce clutter, equipment usage, and dishwashing in service environments.

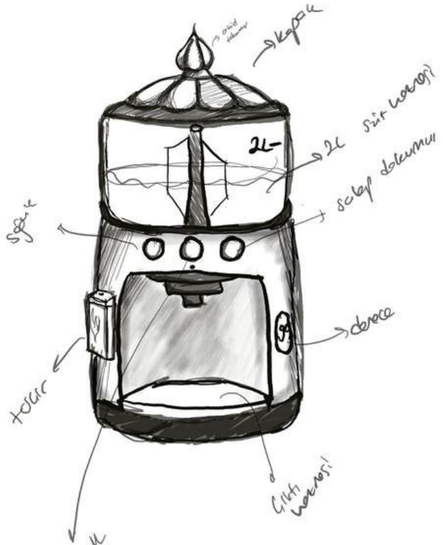

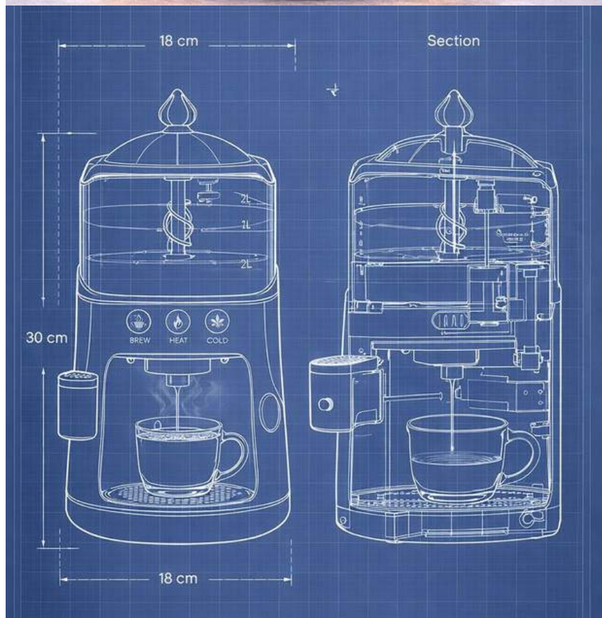

DESIGN DECISIONS

THE CONCEPT COMBINES THE PREPARATION AND HEATING STAGES OF SALEP IN A SINGLE MACHINE. EXISTING SYSTEMS USUALLY REQUIRE SALEP TO BE COOKED ON A STOVE BEFORE BEING TRANSFERRED TO A WARMING MACHINE. INTEGRATING BOTH STAGES SIMPLIFIES THE SERVICE PROCESS FOR COFFEE CHAIN ENVIRONMENTS.

A SMALLER CAPACITY WAS CHOSEN BECAUSE SALEP IS BEST CONSUMED FRESH. SIMILAR STRATEGIES ARE USED IN COFFEE CHAINS WHERE DRINKS ARE PRODUCED IN LIMITED BATCHES. THIS APPROACH HELPS MAINTAIN FRESHNESS AND ENCOURAGES REPEAT VISITS.

A LIGHTWEIGHT TRITAN CONTAINER WAS SELECTED FOR THE PREPARATION CHAMBER. TRITAN IS A BPA-FREE, FOOD-SAFE COPOLYESTER THAT IS COMMONLY USED IN BEVERAGE EQUIPMENT. COMPARED TO GLASS, IT IS LIGHTER, MORE DURABLE, AND EASIER TO HANDLE DURING DAILY CLEANING BY EMPLOYEES.

DIFFERENT MIXING TECHNIQUES WERE EXPLORED WITH THE HELP OF AI. HOWEVER, DUE TO THE THICK AND STARCHY NATURE OF SALEP, THESE METHODS WERE NOT CONSIDERED EFFECTIVE ENOUGH. THEREFORE, THE CONCEPT FOCUSES ON A SIMPLER HEATING-BASED SYSTEM SIMILAR TO EXISTING MACHINES.

ACCEPTED / REJECTED / TRANSFORMED

- Preparation and heating in a single machine
- Compact capacity system for fresh salep preparation
- Stainless steel machine body
- Tritan preparation chamber (lightweight and heat resistant)
- Integrated cinnamon container
- Simplified heating-based preparation system

Magnetic stirring system
- Shaking-based mixing mechanisms
- Large commercial capacity machines
- Glass preparation chamber

Traditional stove preparation → machine-based preparation
- Warming machine → preparation-focused machine
- External cinnamon usage → integrated cinnamon container
- Large scale system → compact batch preparation

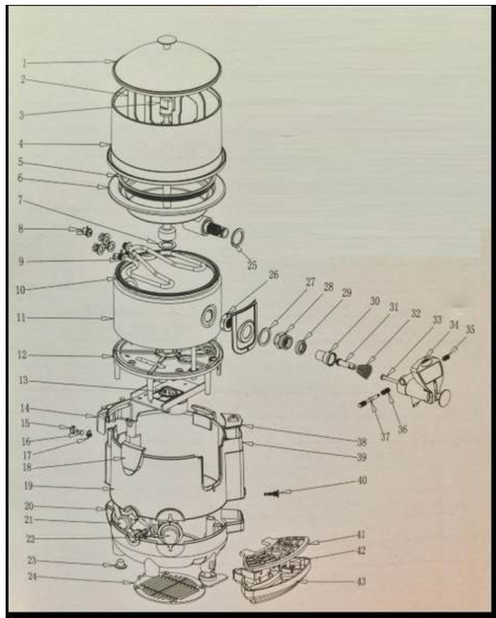

REFLECTION

This project helped me understand how research, user insights, and technical exploration shape a design process. Through investigating different preparation and mixing methods, I was able to evaluate which solutions were realistic for salep. AI tools supported the process by helping me explore materials, mechanisms, and alternative approaches. As the design evolved, I focused on simplifying the system while improving the preparation workflow. The final concept reflects a balance between practicality, cultural context, and service efficiency.

THANK YOU

LARA KARAŞAL