ÖZYEĞİN UNIVERSITY

IDE 202.B: DESIGN STUDIO 2 DESIGN MILESTONE "RESTEA"

Defne Taydaş S040063

Empathize

Aim: Understanding the tea and coffee rituals and drinking behavior around the world. It will increase my knowledge about hot beverages around the world. Understanding why people drink tea or coffee?
AI tool used: GPT-4o mini
Role of AI: Researcher

Prompt:
Can you tell me about the behavior of coffee and tea drinking? Can you tell me about the drinking coffee, tea, and herbal infusions rituals around the world? While mentioning rituals, can you tell me about their culture?

AI -Text Summary
Coffee, tea, and herbal infusions are far more than daily beverages — they are deeply rooted cultural rituals that reflect each society's values around hospitality, community, and human connection.
Coffee traditions vary dramatically across regions. In the Middle East, brewing coffee in a cezve and serving it with dates is an act of respect toward guests. Italy's espresso culture is built around social rhythm — specific drinks at specific times, consumed quickly amid lively conversation. Ethiopia takes it furthest, with a multi-hour communal ceremony involving roasting, grinding, and brewing across three ceremonial rounds, symbolizing friendship and togetherness.
Tea carries equally rich cultural weight. Japan's Chanoyu ceremony is a mindful, aesthetic practice built on harmony and tranquility. British afternoon tea became a social institution centered on etiquette and relaxation. China's Gongfu ceremony treats tea-making as a fine art, using premium leaves to spark meaningful conversations rooted in respect.
Herbal infusions follow the same communal spirit. South America's yerba mate is passed in a shared gourd, embodying camaraderie. India's chai — spiced, milky, and ever-present — is offered to every guest as an instinctive gesture of warmth. Mexico's indigenous tisanas connect drinkers to nature and ancestral heritage.
Across all cultures, the pattern is consistent — these are not just drinks but rituals of slowing down, showing care, and strengthening the bonds between people, making them one of the most enduring expressions of human connection worldwide.

Reflection:
Through this research, I gained a deeper understanding of global brewing cultures, and using AI helped me to gain more meaningful insights from the researched material than I could have on my own.
Decision:
Researching these global rituals reminded me that a brewing device isn't just a tool — it's entering a deeply personal and cultural moment, which made me rethink my design priorities beyond pure functionality.

Define

Aim: Defining problems from the beginning of preparation till drinking tea. According to that finding, design solutions to decrease the problems.
AI tool used: Gemini 3
Role of AI: **Reframer** - **Research**

Prompt:
Here are my observations and interview notes: Herbal infusions are preferred to be drunk when people crave them and want to relax. They want to drink it after work or midday. They are complaining about spending too much time boiling and cleaning steps due to the waste of water. Herbal infusions require a specific temperature, so they are complaining about not knowing how much degree it is. They find it dangerous to take the metal container that has herbal infusions in it due to splashing water that can spill and burn. They preferred to have a temperature screen that shows how many degrees it is.

AI -Text Summary
Core Problem: The "evening tea ritual" is broken by two main friction points — temperature guesswork and burn risk during steeping.
Four Key Insights:
Users feel "blind" about water temperature, so visual feedback (LED display or color-changing light ring) is essential. The dangerous moment is transferring hot water from the heating element to the cup, suggesting the device needs an integrated steeping chamber and a gooseneck spout. People waste energy boiling far more water than they need, pointing toward a single-serve flash-heating system with a small reservoir. The device needs to work comfortably in both office and home settings, so form factor matters.
The proposed solution is essentially an all-in-one personal tea maker: precise temperature control with visual feedback, a cool-touch exterior, a ~0.5L reservoir, and a no-touch basket ejection system.

Reflection:
While the process didn't change dramatically, it sharpened my understanding of the core problems. With those insights now clearly defined, I'm ready to move into the design phase.

Decision:
After identifying problems - temperature control, water waste, safety concerns, and cleaning - I'll now select one central tension to focus on that problem and design accordingly.

Define

Aim: Deciding on features, identifying problems, and clarifying the primary design focus
AI tool used: ChatGPT-4o mini
Role of AI: Clarifier

1. Prompt:
My user: +18 people who are working or going to school. / My use context: It is preferably used at home after work, in the evening. It's used for meaningful preparation time, like taking a break from everything and slowing down. Additionally, relieving stress and anxiety after school and work.

2. Prompt:
My observations show that the cleaning part has many issues, such as wasting too much water, and cleaning leaves is hard, resulting in too much wastewater. Furthermore, while preparing tea, temperature is important, right? Not every tea is brewed at the same temperature. Also, the tea strainer needs to be a little wider to give the leaves free space. Additionally, after taking 1 cup of tea, the tea should be at the same temperature for the second or third cup. Finally, while taking out the filter, hot water splashes everywhere. It might burn someone, and also make a mess.

AI-Text Summary:
Mapped six key issues: Water waste, leaf cleaning, temperature control, strainer width, temperature control after brewing, and hot water splashes. Created a structured issues/solutions table. Confirmed cleaning as top priority over strainer size. Identified smartphone integration as a disruption to the mindful transition. Provided a concise bullet format assumption list and final key finding summary.

Reflection:
Writing problems out to AI made everything clearer. AI’s recommendation on which tension to prioritise (cleaning first) helped make a concrete design decision.
Decision:
Decided to focus on the cleaning process and temperature adjustment as the two primary design tensions. Rejected smartphone integration to preserve the traditional, mindful experience.

Direction
"I will design for young adults and adults who are tea enthusiasts, seeking a relaxing and mindful transition after the mental load of daily activities by removing the technical barriers of traditional brewing, making the filtration process water-efficient and residue-free, and emphasising easy preparation to avoid disrupting the calming ritual and transition."

Ideate

Aim: Generate and visualize an early concept using Vizcom rendering
AI tool used: Vizcom
Role of AI: **Renderer**

Attachments:

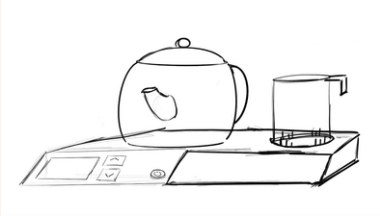

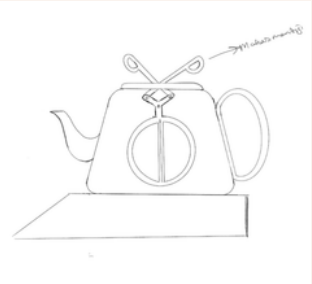

AI Visual Output:

Reflection:
AI rendering made sketches immediately, and it was easy to understand the design problems. Vizcom consistently struggled to render complex interior mechanisms and colour changes accurately. The cleaning tube mechanism required manual over-drawing in all renders.

Decision:
Decided to continue with rounded organic form language. The last design was rejected due to an inefficient filter system.

Ideate

Aim: Define the filtration/cleaning mechanism. It’s the primary tension and is challenging to find a solution.
AI tool used: Claude
Role of AI: Critique - Mechanical ideation support

1. Prompt:
According to my scenario 1. Adjust the temperature (80–95°C). 2. Put a French press-like cylindrical apparatus inside the strainer — it holds the tea, is empty in the middle, and has no lid. 3. Put the strainer in water and let it brew. 4. Press the temperature stability button. 5. After 5–6 minutes, pour the tea. The second cup stays warm thanks to the stability button. 6. Take out the strainer. 7. Pull out the French press-like apparatus — while pulling it out, the leaves fall into the cylindrical space and gather inside. 8. Only need to clean the cylinder and rinse the strainer and teapot briefly.

2. Prompt:
The piston and lid mechanism under the filter is great, and it makes the most sense. But the biggest issue is the engineering part. How do we solve it?

AI-Text Summary
The AI identified a core mechanical flaw — pulling a cylinder upward won't cause leaves to fall in, since gravity works against it — and proposed three alternative mechanisms: a plunger that compresses and ejects leaves downward, a hinged or twist-open bottom, or a collapsible mesh that closes around the leaves.
The second response focused on solving the three engineering challenges that follow: how the piston triggers the bottom to open (via a cam or linkage), how the bottom stays sealed during steeping (a spring system that the piston force overrides), and how to prevent leaking (a silicone seal). The French press and push-button soap dispenser were suggested as close mechanical references to study.

Reflection:
Claude identified a fundamental flaw in the original concept and supported me in finding better solutions
Decision:
I decided to go with a piston and a lid mechanism. I rejected the rotating base due to too many moving parts over time, and a non-stick surface due to durability concerns.

Prototyping

Aim: Produce final annotated renders of both form directions in both colourways
AI tool used: Gemini
Role of AI: Renderer

Prompt:
Product design render of a single-serve smart teapot. Round spherical borosilicate glass body, 14cm diameter, 13cm tall, 800ml capacity. On top of the glass body, a small circular warm white PP plastic lid, 9cm in diameter, with a small circular piston button in the center. The handle is an ergonomic loop at the back of the body, warm white PP plastic, smooth and organic — integrated naturally into the body. Short spout at the front flowing organically from the body. Inside the transparent glass body, a cylindrical stainless steel strainer with laser-perforated walls is suspended from the lid, floating above the bottom. A stainless steel piston rod runs through the center of the lid, movable. Two small side buttons on the lower body. The teapot sits on a separate matte black anodized aluminum heating base, 18cm in diameter, 4cm tall. On the front area of the heating base top surface, a small digital temperature display showing 85°C, a rotary dial, and a lock button — all grouped. Four silicone rubber feet on the bottom of the base. Cable exits from the back of the base. Warm white and matte black color combination. Soft studio lighting, white background, professional product photography.

Attachments:

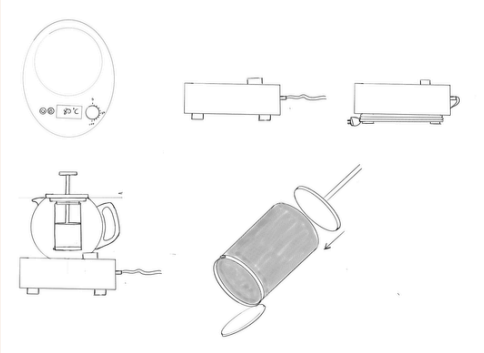

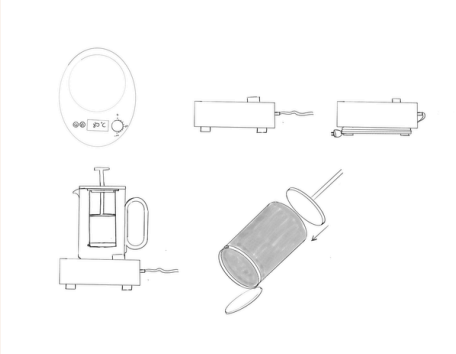

AI-Visual Output

Reflection:
Both colourways shown side-by-side allowed a genuine design decision rather than abstract preference. AI still could not render the piston strainer mechanism accurately in any tool across the entire process.

Decision:
For the final form round, spherical form and off-white colour have been chosen. Because round shapes are not edgy and do not make the user uncomfortable. Off-white colour symbolises peace, refinement, comfort, and quiet luxury.

Prototyping - Test

Aim: Deciding on the final form
AI tool used: Gemini
Role of AI: Renderer

Prompt:
"Use this exact image as a reference. Keep everything completely identical — the round borosilicate glass teapot, off-white color, do not put stainless steel strainer inside the image, off-white ABS lid and handle, short spout, all labels and dimensions shown.
Change ONLY the heating base. The new heating base must be: oval/ellipse shape, long side 20cm facing the user, short side 14cm, 4cm tall, same off-white anodized aluminum color. The top surface is completely flat and horizontal — no tilt, no slope, no forward angle, perfectly level.
On the flat top surface from left to right: first, an analog rotary dial for a timer with minute markings around it. Directly in front of the three controls, three small round buttons in a row — first power/start button, second temperature lock button, and third Bluetooth button.
Cable exits from the rear face, bending straight downward. Four small silicone rubber feet on the bottom. White background, soft studio lighting, professional product render, same labeling style as reference image."

Attachments:

AI-Visual Output

Reflection:
AI couldn’t render the stariner accurately, so I decided to keep it separate. I will render it myself and then try to put it inside the teapot. Decided to add one more feature (timer) to enhance user experience.

Decision:
After exploring various forms, a round and spherical shape was chosen for the final design, paired with an off-white color to reinforce a calm and natural aesthetic. A soft-alarm timer was also added to notify users when their tea is ready.

Prototyping - Test

Aim: Deciding on the final filter design
AI tool used: Gemini
Role of AI: **Renderer**

Prompt:
Place this strainer that I modeled in 3D inside the teapot. As you can see, the product will have layers — the top layer will be stainless steel, the layer below it will be the strainer with laser-cut holes. Please add them as they would look great in 3D but I couldn't do it. The layer below that will be a plain stainless steel cylinder, and below that will be the lid but keep it closed. Please connect it with the teapot lid, add it to the bottom, and it should be 1-2cm above the teapot base.

Attachments:

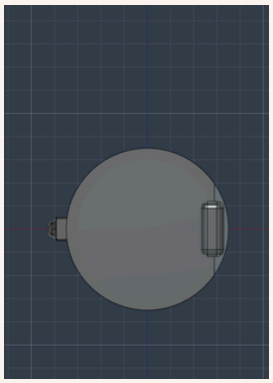
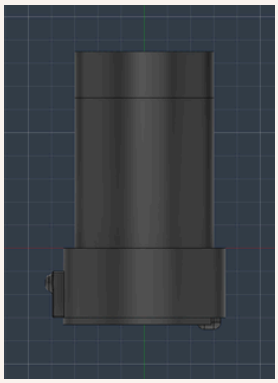

AI-Visual Output

Reflection:
Creating 3D models and sketches proved essential in communicating my design to AI — by visualizing how the mechanism worked, the AI was able to analyze and render it far more accurately than through description alone.
Decision:
I decided not to include a Bluetooth button, as connecting the device to a phone would contradict the core concept. This product is designed to help people slow down and take a break from both work and technology.

Prototyping - Test

Aim: To show the final design
AI tool used: Gemini
Role of AI: Renderer

Front

Right

Back

Left

Restea Teapot

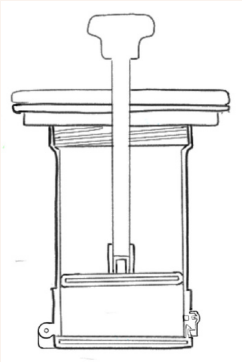

Filter mechanism

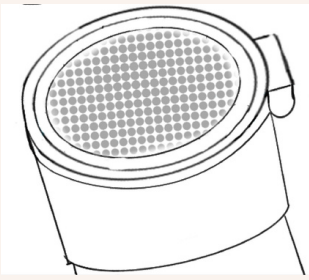

Filter bottom of the lid

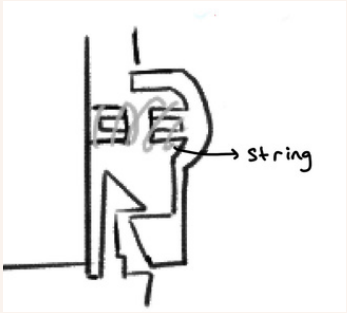

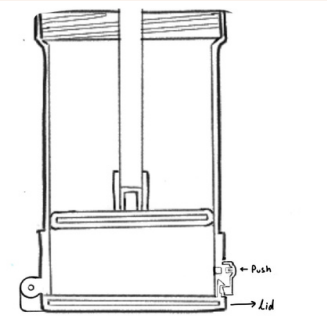

Filter bottom lid mechanism

Decision:
AI-Text Outcome:
Material:

- Teapot body: Borosilicate glass
- Lid: ABS plastic, off-white
- Handle: ABS plastic, off-white
- Strainer body + bottom cap: Stainless steel
- Strainer filter surface: Laser-perforated stainless steel
- Piston rod + piston plate: Stainless steel
- Spring + latch + hinge: Stainless steel
- Heater base: Anodized aluminum, off-white
- Rubber feet: Silicone
- Heater Wattage: 1000W