IDE 202.B

AEQUA

GÜLİN ÜLGER S046452

DESIGN PROCESS

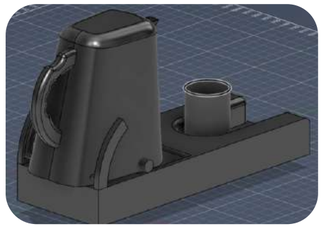

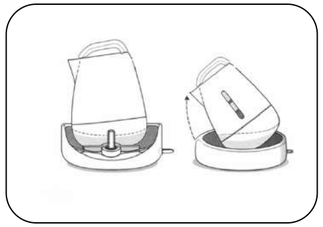

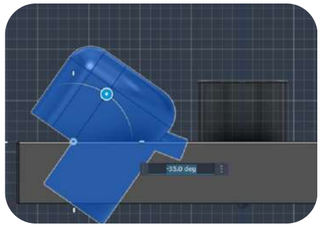

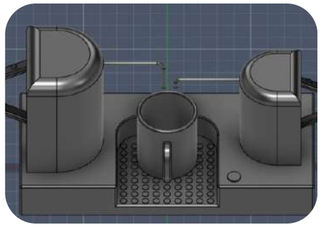

1. PROBLEM FRAMING: Shifting the core focus from physical grip strength to addressing critical burn and spill risks for visually impaired users.

2. EARLY IDEATION: Exploring biomimetic concepts and physical slide-track mechanisms to create safe alignment strategies.

3. THE PIVOT CONCEPT: Developing a "lift-free" cradle mechanism designed to eliminate the need for lifting, aiming to maximize physical safety.

4. THE BREAKING POINT: Identifying severe mechanical and dynamic center-of-gravity failures during 3D testing, which led to the complete abandonment of the tilt mechanism.

5. FINAL RESOLUTION: Achieving a fully fixed, closed-system pump architecture with integrated tactile controls to ensure a completely safe, autonomous experience.

THE CONCEPT

AEQUA is a smart, lift-free hot beverage preparation unit designed for visually impaired users. It eliminates the risks of burning, spilling, and misalignment by utilizing a fixed, closed-system pump architecture guided entirely by tactile (Morse/Braille) interactions.

- ACCESSIBILITY
- NON-VISUAL INTERACTION
- LIFT-FREE
- CLOSED SYSTEM
- SAFETY DRIVEN

EMPATHIZE AND DEFINE

SHIFTING THE FOCUS

Moving from ergonomic assistance (grip strength) to prioritizing physical safety for visually impaired users.

- KEYWORDS: Burn Risk, Alignment, Visual Dependency.
- PROMPT: "Changing my focus to visually impaired users. Can you research potential risks to establish priorities?"
- AI ROLE: RE-FRAMER
- AI FEEDBACK: Identified "Burn & Spill Risks" as the absolute primary barrier. Warned against solving too many physical issues at once.
- REFLECTION: For visually impaired users, physical safety (preventing burns) is far more critical than interface design.
- DECISION: Shifted the entire design focus toward eliminating direct exposure to hot liquids.

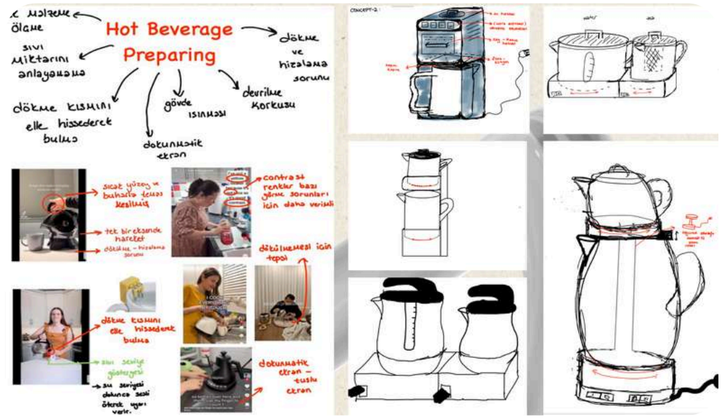

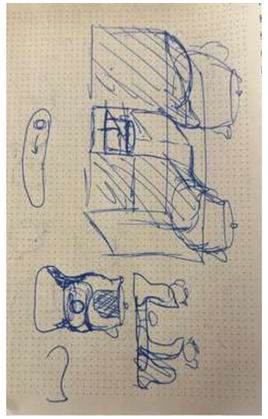

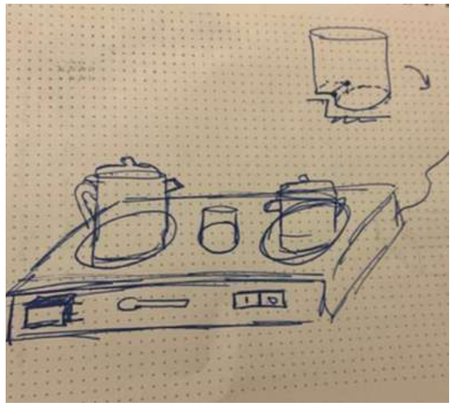

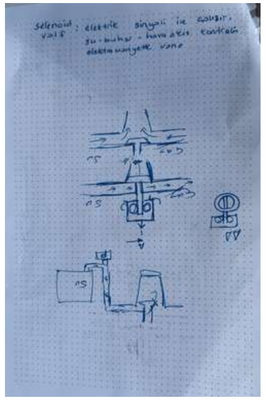

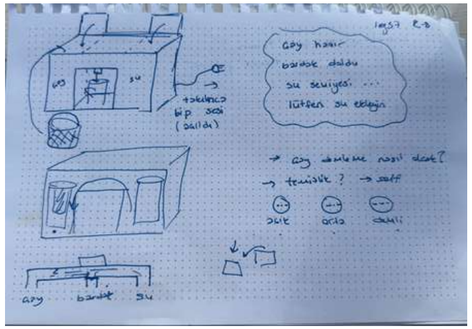

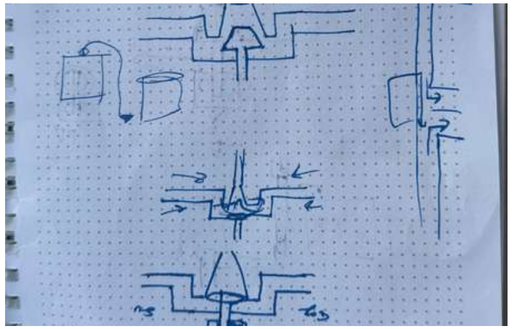

EARLY IDEATION

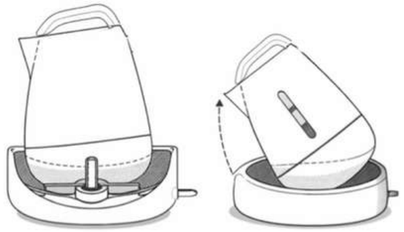

STRUCTURING MECHANICAL SOLUTIONS

Translating fragmented, abstract ideas into concrete, testable physical constraints.

- KEYWORDS: Slide-track, Mechanical Feedback, Tactile Dosing.
- PROMPT: "I have 2 concepts: a wide-mouth brewer and a sliding pot system. Need help figuring out Concept 3 involving measuring spoons and level indicators."
- AI ROLE: CLARIFIER & EXPANDER
- AI FEEDBACK: Structured my scattered thoughts into 3 distinct mechanical variations: Wide-Mouth, Guided Slide-Track, and Tactile Dosing Station.
- REFLECTION: Low-tech mechanical feedback (guide rails, clicks, physical floats) provides safer and more reliable accessibility than complex sensors.
- DECISION: Selected the "Guided Slide-Track" and dual-pot system to test its effectiveness against burn and alignment risks.

DEVELOPING LIFT-FREE POURING

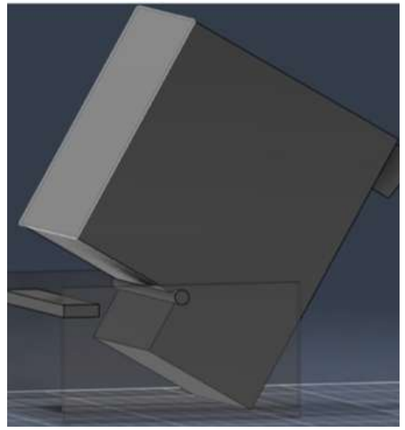
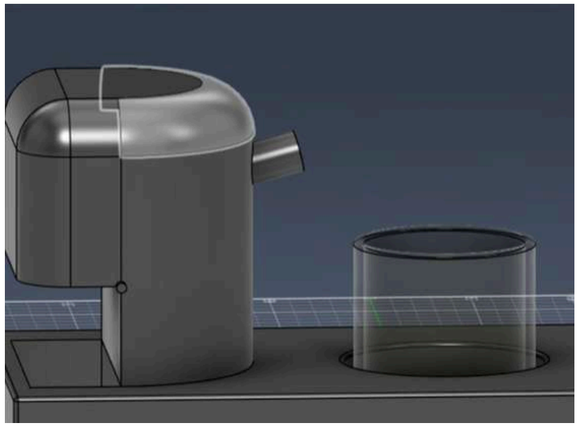
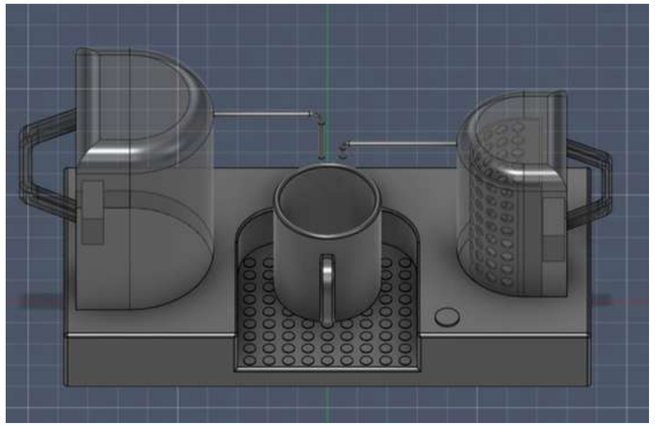
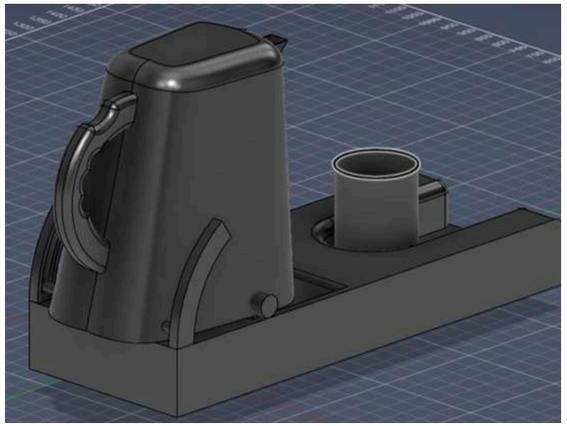

TESTING AND PIVOTING THE DESIGN

Transitioning from a mechanical tilt approach to an automated internal liquid transfer system to guarantee absolute safety.

- THE PIVOT ATTEMPT: Initially designed a "cradle pivot" to eliminate lifting. However, 3D testing revealed severe structural risks due to the shifting dynamic center of gravity.
- THE PUMP SOLUTION: Abandoned tilting entirely. Transitioned to a fixed-body architecture utilizing a food-grade internal pump, eliminating all physical movement.
- KEYWORDS: Cradle Pivot, Geometry Failure, Internal Pump, Fixed Body.
- PROMPT: "The pivot test failed... Is it possible to make this a completely closed system like a water dispenser, pumping water internally without moving the pots?"
- AI ROLE: CRITIQUE & RE-FRAMER
- AI FEEDBACK: Proved the "balanced hinge" was physically unviable. Proposed shifting to a stationary, closed-system block using an internal pump and solenoid valves.
- REFLECTION & DECISION: I realized that any physical movement of boiling water carries inherent risks. I decided to completely abandon the mechanical tilt and solve the problem through internal liquid routing.

MECHANISM TESTING

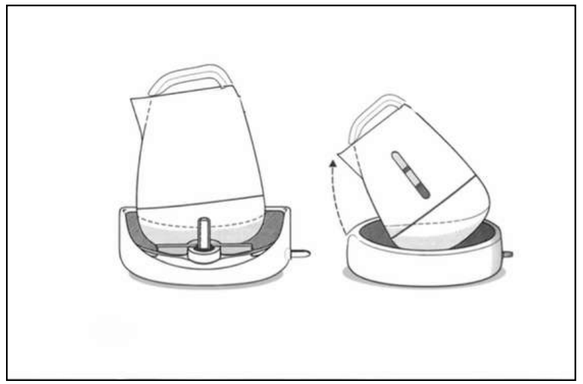

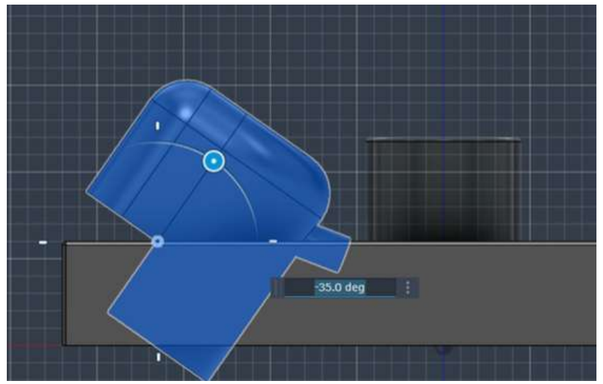

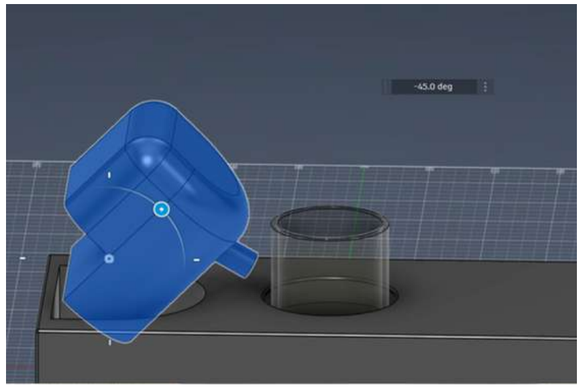

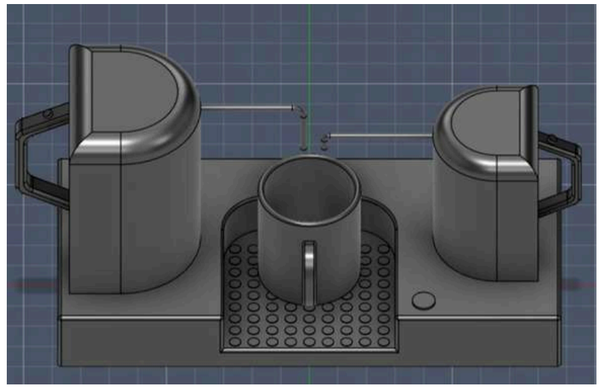

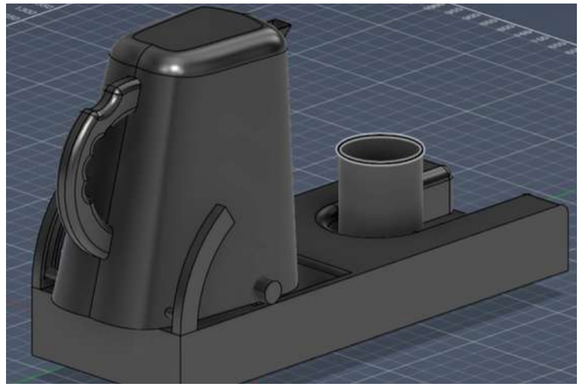

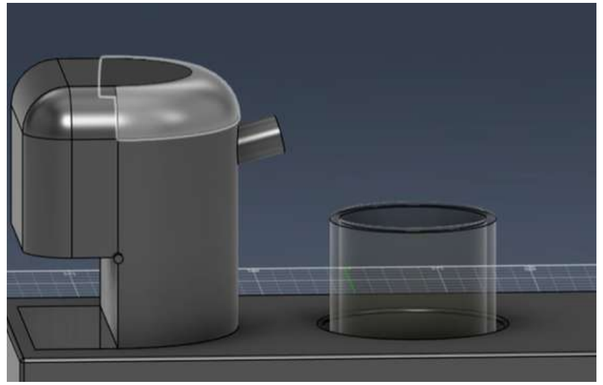

THE BREAKING POINT

Testing the pivot mechanism in 3D revealed critical structural and geometric flaws, proving the concept unviable.

- KEYWORDS: Geometry Failure, Dynamic Center of Gravity, Collision, Structural Tension.
- PROMPT: "The given measurements didn't work, test phase failed... Will this balanced hidden hinge system really work?"
- AI ROLE: CRITIQUE
- AI FEEDBACK: Proved that a "balanced hinge" is physically impossible due to the shifting dynamic center of gravity as liquids pour. It also highlighted severe structural tension on the joints.
- REFLECTION: I realized that even with small adjustments, the mechanical pivot system was fundamentally unpredictable and unsafe for a visually impaired user in a real scenario.
- DECISION: I decided to completely abandon the tilt/pivot mechanism and go back to the drawing board to find alternative, stationary solutions.

THE MAJOR SHIFT: INTERNAL ARCHITECTURE

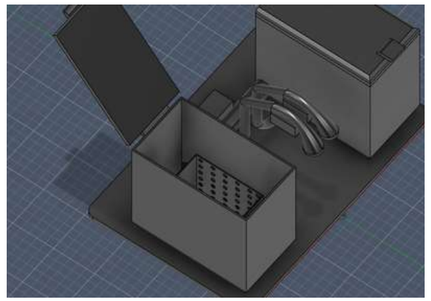
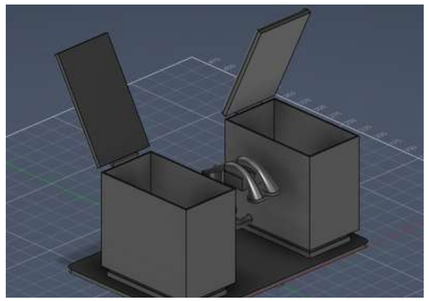
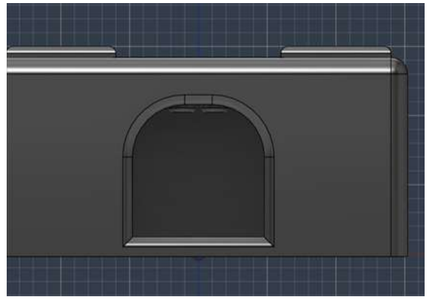
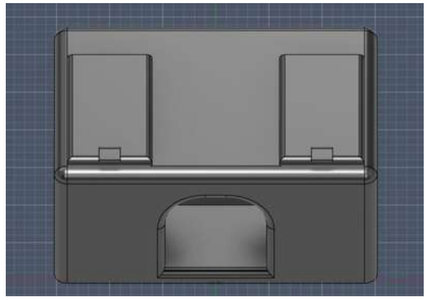

ACHIEVING AUTONOMOUS FIXED-BODY ARCHITECTURE

Eliminating movement entirely by shifting to a stationary, internal-pump system to guarantee absolute safety.

- KEYWORDS: Internal Pump, Solenoid Valve, Fixed Body, Lift-Free.
- PROMPT: "Is it possible to make this a completely closed system with dual pots? I need to transfer boiling water to the brewing chamber internally. Is this actually manufacturable?"
- AI ROLE: RE-FRAMER & ENGINEER
- AI FEEDBACK: Confirmed the system is 100% manufacturable using an internal water pump and a directional solenoid valve to safely route boiling water without user intervention.
- REFLECTION: I realized that keeping the boiling water entirely inside the machine is the ultimate safety solution.
- DECISION: Transitioned to a fixed-body design with hidden internal fluid transfer, eliminating the need to pour or tilt manually.

INTERACTION & SAFE MECHANISM

ENGINEERING FOR INDEPENDENCETo ensure absolute safety and ease of maintenance, AEQUA utilizes a fully closed, autonomous internal architecture.

- Internal Solenoid Valves: The system uses a directional solenoid valve to safely route boiling water either to the brewing chamber or directly into the cup. This completely eliminates the need for manual pouring.
- Removable Reservoirs: Both the water and tea pots feature spring-loaded check valves at their base. When lifted, the valves instantly seal, allowing the visually impaired user to detach and wash the reservoirs in the sink without any risk of leakage.
- Self-Cleaning Mode: To prevent tea residue buildup inside the closed pipes, a dedicated tactile "Clean" button activates a self-cleaning cycle. It flushes the internal routing system with hot water, ensuring long-term hygiene.

THE CONCEPT

FINAL EVALUATION: Discarding the mechanically unsafe pivot system in favor of the fixed-body pump architecture transformed the project from a risky concept into a highly viable, safe, and inclusive consumer product.

CONCLUSION AEQUA: successfully breaks the "medical device stigma" by offering an elegant, highly functional home appliance. Through iterative testing, structural analysis, and embracing failures, it now guarantees absolute independence and physical safety for visually impaired users.

ACCEPTED

- Fixed Closed-System: Eliminates all lifting and tilting burn risks.
- Automated Brewing Ratios: 3-level tactile buttons (Light, Normal, Strong).
- Cup Alignment Niche: Solves spatial awareness blindly.
- Integrated Dosing: A physical measuring scoop built into the base.

REJECTED

- Grip-Strength Focus: Did not address the primary burn hazard.
- Capsule Systems: Expensive and focused on convenience rather than inclusive safety.
- Tilting Pivot Mechanism: Structurally unsafe and dynamically unstable.

TRANSFORMED

- High-Tech Camera $\rightarrow$ Audio Feedback: Replaced complex visual AI with a reliable, low-tech voice-assisted water level alert.
- Manual Pouring $\rightarrow$ Internal Valves: Moved hot liquid transfer entirely inside the machine using Solenoid valves for zero-contact brewing.