DESIGN MILESTONES

İpek Özemre S046340

RESEARCH

MORNING COFFEE PREPARING SCENARIO

- **trigger:** Desire for coffee to sober up
- preparation: fill water, measure coffee, push the buttons to initiate the heating
- **waiting:** heating phase, listening to boiling sounds, waiting for the coffee to brew (time pressure, anxiety)
- **serving:** machine drips coffee into container, pour it into thermos (spill risk)
- **cleaning:** clean the filter, clean the container, wipe surface, empty leftover water, clean the thermos when you come back to dorm/home
- **storage:** place back on counter/cupboard, manage cable, limited space

User: people who prepare their coffee in the morning rush of getting ready to work/ school, who bring their coffee with them to the office/lecture

Context: weekday mornings, at home or dorm room, limited time

SHORT INTERVIEW

I interviewed a student who bring his coffee to the lecture every morning.

I **asked AI to behave like** an adult working in an office who brings their coffee with them in a thermos and I wanted AI to **answer my interview questions.**

OBSERVATIONS

- time pressure, no slow ritual
- coffee is functional, not for enjoyment
- user doesn't want to deal with cognitive work
- post-use cleaning is a burden (often postponed)
- uncleaned equipment cause stain and odor
- stress peaks at serving stage (machine → thermos)
- transportation cools coffee down and adds to the dishes

INSIGHTS

- need fast and flawless coffee preparation flow
- brewing wait time and post-use cleaning slow it down and create stress
- tight schedule interrupted
- risk of spills increased

OPPORTUNITY AREAS

- improve the post-use cleaning phase
- reduce the spill stress.
- remove the transportation phase

DESIGN ALTERNATIVES

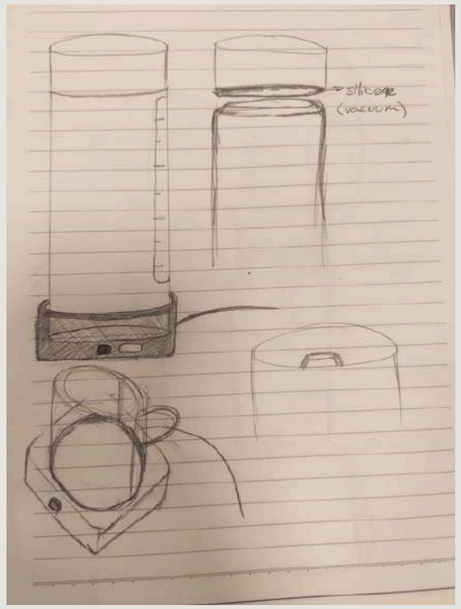

THERMOS HEATER

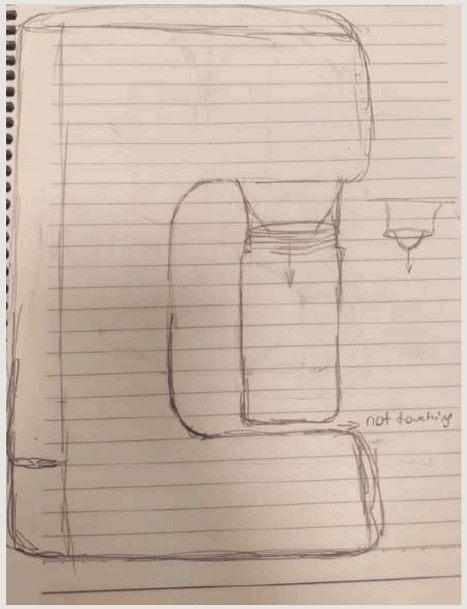

SCREW-ON POD MACHINE

*I uploaded my sketches to AI and wanted it to turn them into real product images

*I decided to focus on the screw-on pod machine to solve spill risk problems

CONCEPT: SCREW-ON POD MACHINE

- Faster and more practical
- Simple
- Less dish to wash
- No contact with air → less oxidation
- Heat insulation → no need to pre-heat the thermos

CHALLENGES & SOLUTIONS

*I detected the problems and asked AI for technical solutions.

*AI answered my questions and also **highlighted some other challenges** about the design like the need of air venting.

*I searched about the suggestions that AI made and decided on the solutions.

CHALLENGES

1. The thermos should fit snugly in the machine.
2. Attaching and detaching steps should be quick and easy.
3. Coffee should not drip while removing the thermos.

AI SOLUTIONS

1. solenoid valve
2. spring-loaded valve
3. bayonet mount
4. passive drainage channel
5. concentric pipe system

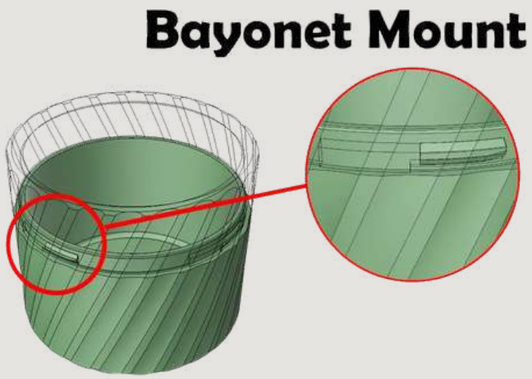

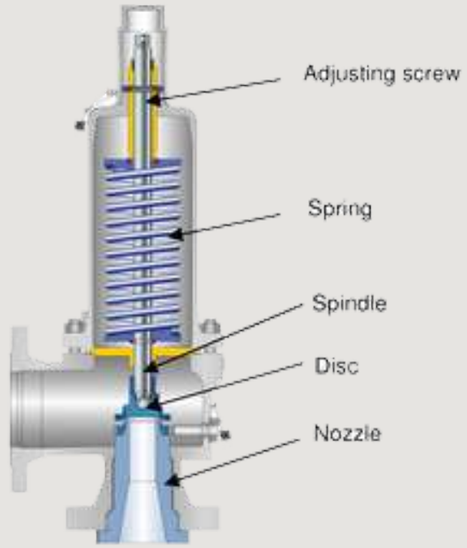

DECISIONS

1. bayonet mount for easy attachment
2. a locking light to ensure the thermos is locked-in
3. spring loaded valve to prevent dripping
4. air-venting hole

*I wanted AI to **visualize** the technical parts of my design using my initial concept and new decisions.

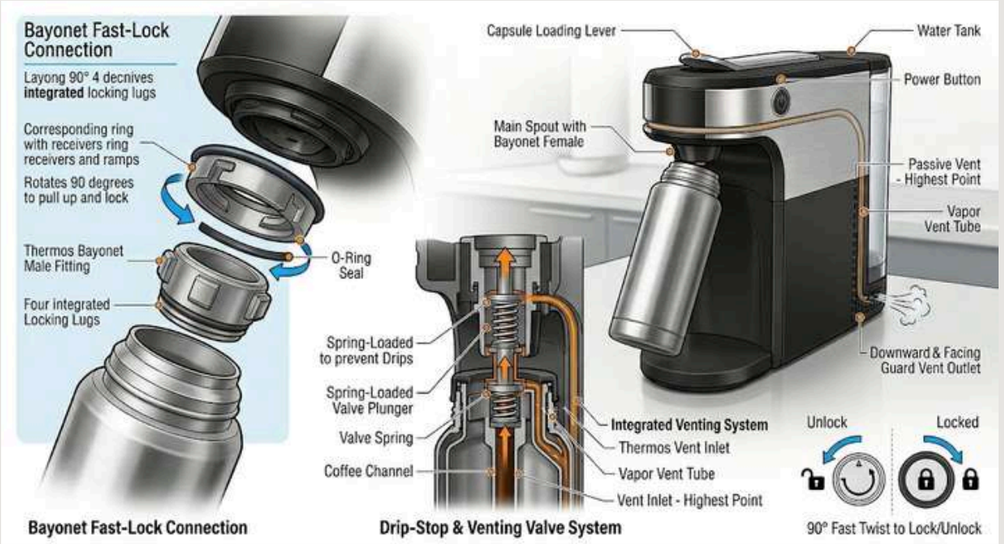

*I used AI to **make research** about:

- pod types and sizes
- milk and sugar container usage in other coffee machines
- coffee to milk ratios

STANDARD COFFEE POD VOLUMES

Pod Type	Standard Serving	Typical Volume (ml)
Nespresso Original	Ristretto / Espresso / Lungo	25ml / 40ml / 110ml
Nespresso Vertuo	Espresso / Double / Mug / Carafe	40ml / 80ml / 230ml / 535ml
Keurig (K-Cup)	Small / Medium / Large	180ml / 240ml / 300ml
Dolce Gusto	Varies by pod (e.g., Espresso vs. XL)	35ml up to 300ml

COFEE/MILK RATIO

Coffee Style	Coffee Volume	Milk Volume	Texture / Style
Caffè Latte	60ml (2 shots)	240ml	Mostly steamed milk, light foam.
Flat White	60ml (2 shots)	180ml	Stronger coffee taste, velvety "microfoam."
Café au Lait	150ml (Drip)	150ml	1:1 ratio of brewed coffee and warm milk.
"Standard" Splash	260ml (Drip)	30-40ml	Just enough to change the color to "tan."

DECISIONS

500 ml thermos

300 ml pod

350 ml transparent milk foamer with measurements written on it, attached to the spout of the machine

no sugar container because of the heat and moist

example milk containers I found on the internet

PROTOTYPE

*I made a mockup to answer the questions in my mind:

How does the screw-on mechanısm work?
Do ı really need a gap between the base and the thermos?

I used the water bottle as the thermos and glued the lid to the ceiling of the machine which will play the role of the dispenser. The bottle(thermos) screws on the lid (dispenser) by turning.

The bottle doesn't fit into the machine diagonally so the gap is needed.

I wanted AI to **visualize my prototype as a real product*

THERMOS DESIGN

*I uploaded my thermos sketches and visualized it with AI

*I added the bayonet mount to the thermos

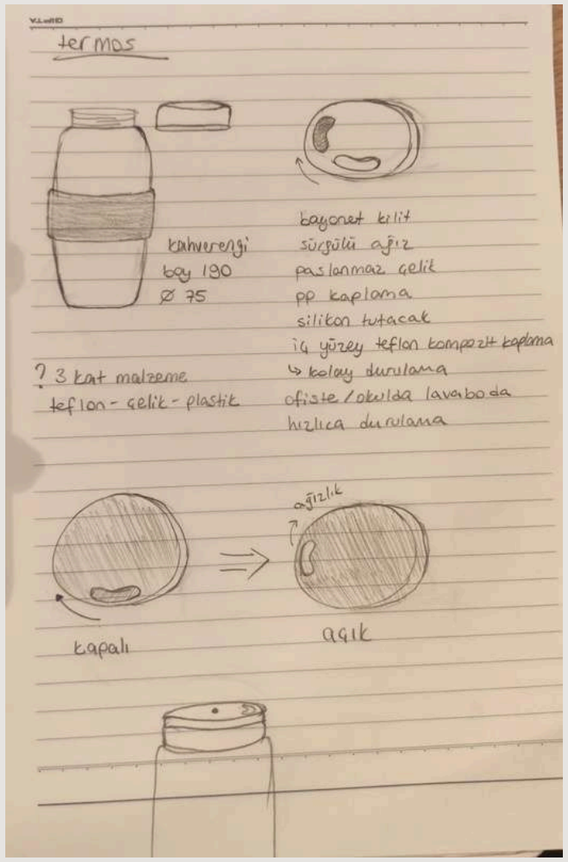

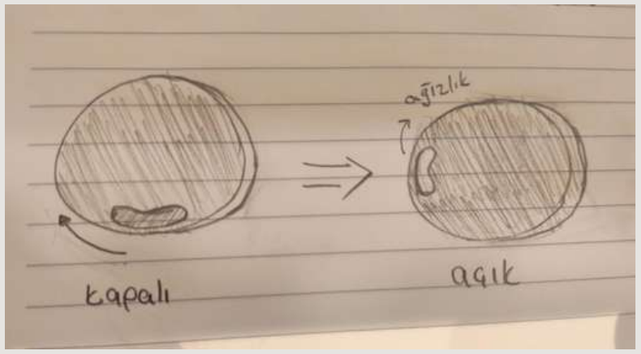

POD MACHINE DESIGN

*I turned my machine sketches into a real product using AI

*I added different alternatives of milk container

*I rejected the idea of milk container since milk foam is not needed for coffee in thermos and cleaning would be a burden

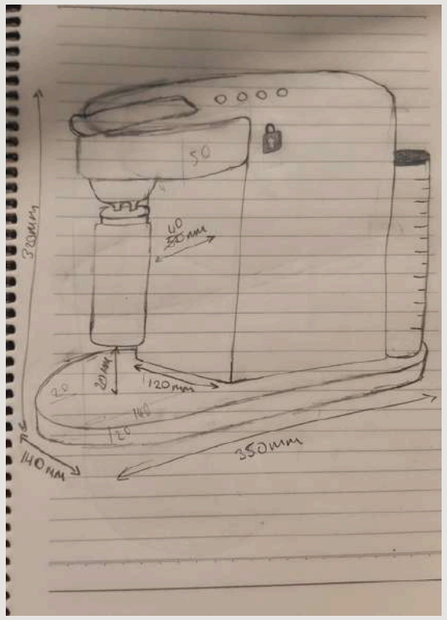

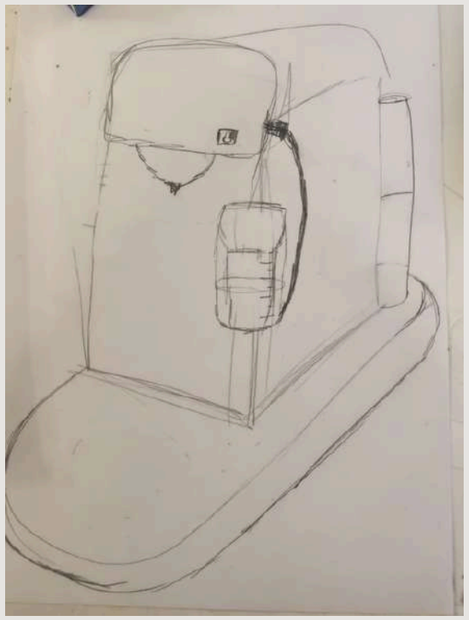

FINAL DESIGN
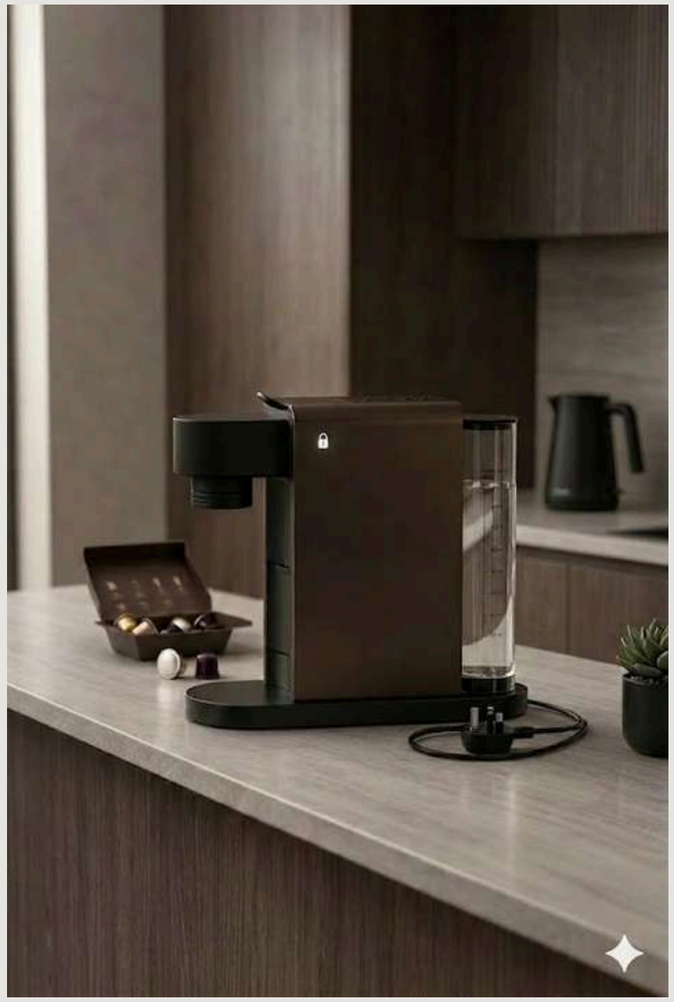
*I added my final thermos to the pod machine and finalized my design.