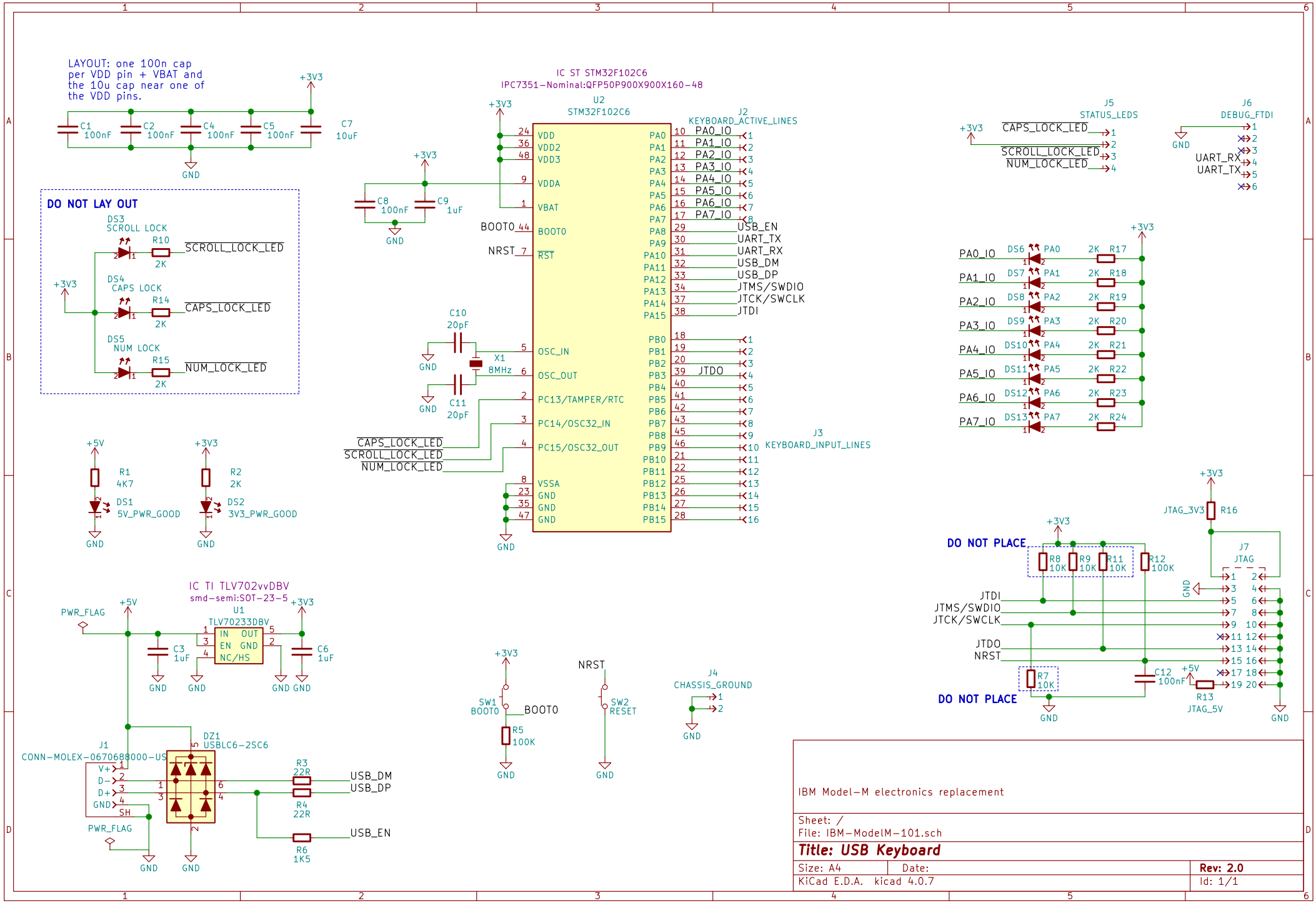
LAYOUT: one 100n cap per VDD pin + VBAT and the 10u cap near one of the VDD pins.
C1 100nF
C2 100nF
C4 100nF
C5 100nF
C7 10uF
+3V3
GND
DO NOT LAY OUT
DS3 SCROLL LOCK
R10 2K
SCROLL_LOCK_LED
DS4 CAPS LOCK
R14 2K
CAPS_LOCK_LED
DS5 NUM LOCK
R15 2K
NUM_LOCK_LED
IC ST STM32F102C6
IPC7351-Nominal:QFP50P900X900X160-48
U2
STM32F102C6
C8 100nF
C9 1uF
BOOT0
NRST
C10 20pF
C11 20pF
X1 8MHz
OSC_IN
OSC_OUT
PC13/TAMPER/RTC
PC14/OSC32_IN
PC15/OSC32_OUT
VDD
VDD2
VDD3
VDDA
VBAT
VSSA
GND
J2
KEYBOARD_ACTIVE_LINES
PA0_IO
PA1_IO
PA2_IO
PA3_IO
PA4_IO
PA5_IO
PA6_IO
PA7_IO
USB_EN
UART_TX
UART_RX
USB_DM
USB_DP
JTMS/SWDIO
JTCK/SWCLK
JTDI
JTDO
J3
KEYBOARD_INPUT_LINES
J5
STATUS_LEDS
J6
DEBUG_FTDI
R1 4K7
DS1 5V_PWR_GOOD
R2 2K
DS2 3V3_PWR_GOOD
IC TI TLV702vvDBV
smd-semi:SOT-23-5
U1
TLV70233DBV
IN OUT
EN GND
NC/HS
PWR_FLAG
C3 1uF
C6 1uF
J1
CONN-MOLEX-0670688000-US
V+
D-
D+
GND
SH
DZ1
USBLC6-2SC6
R3 22R
R4 22R
R6 1K5
SW1 BOOT0
R5 100K
SW2 RESET
J4
CHASSIS_GROUND
DO NOT PLACE
R8 10K
R9 10K
R11 10K
R12 100K
R7 10K
C12 100nF
R13 JTAG_5V
R16 JTAG_3V3
J7
JTAG
IBM Model-M electronics replacement
Sheet: /
File: IBM-ModelM-101.sch
Title: USB Keyboard
Size: A4
Date:
Rev: 2.0
KiCad E.D.A. kicad 4.0.7
Id: 1/1