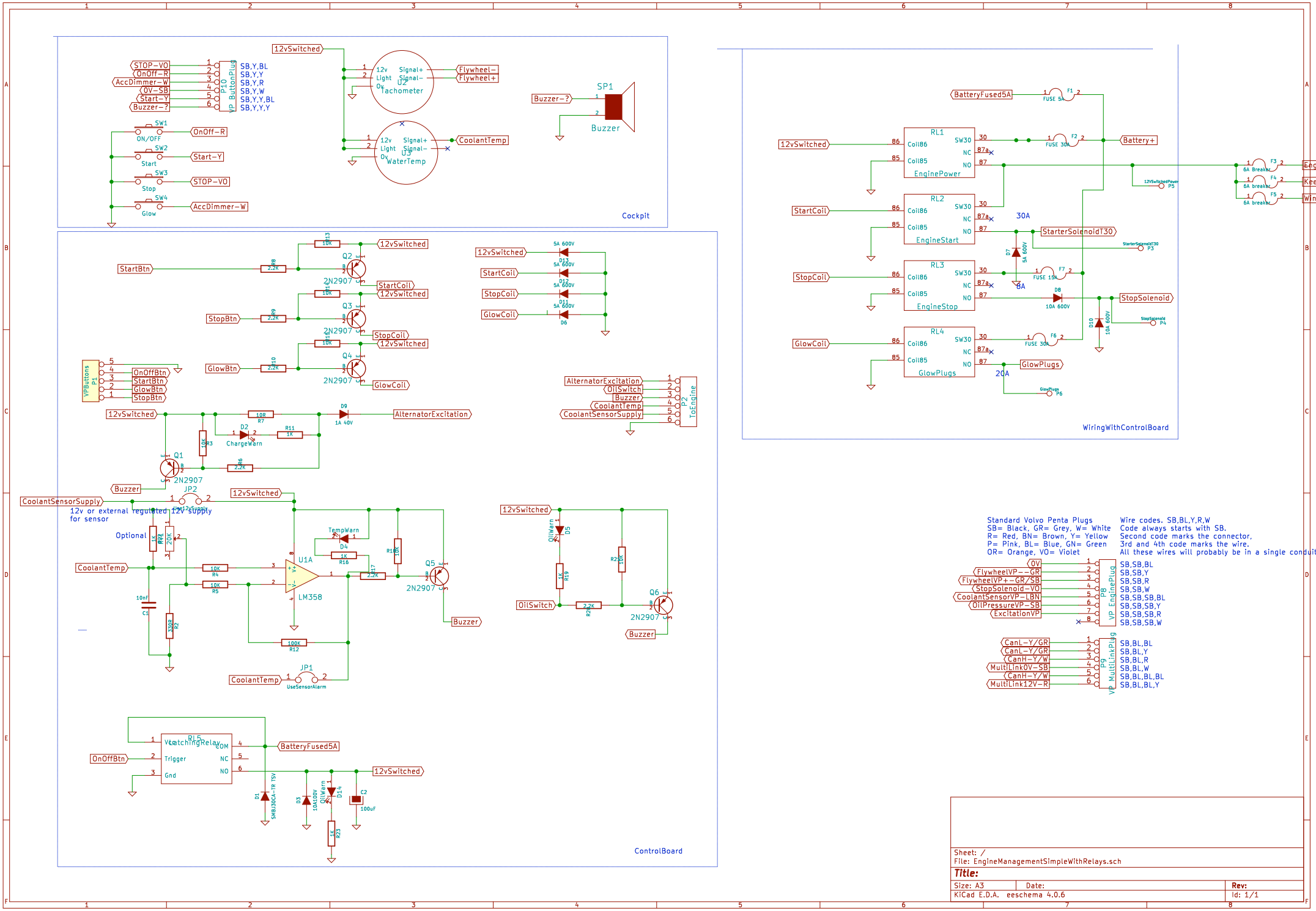
Cockpit
STOP-VO
OnOff-R
AccDimmer-W
0V-SB
Start-Y
Buzzer-?
P10 VP ButtonPlug
SB,Y,BL
SB,Y,Y
SB,Y,R
SB,Y,W
SB,Y,Y,BL
SB,Y,Y,Y
12vSwitched
U2 Tachometer
Flywheel-
Flywheel+
U3 WaterTemp
CoolantTemp
SP1
Buzzer
SW1 ON/OFF
SW2 Start
SW3 Stop
SW4 Glow
ControlBoard
StartBtn
StopBtn
GlowBtn
Q2 2N2907
Q3 2N2907
Q4 2N2907
StartCoil
StopCoil
GlowCoil
VPButtons P1
OnOffBtn
AlternatorExcitation
OilSwitch
CoolantSensorSupply
P2 ToEngine
D9 1A 40V
D2 ChargeWarn
Q1 2N2907
Buzzer
JP2
12v or external regulated 12V supply for sensor
Optional
CoolantTemp
U1A LM358
TempWarn
D4
Q5 2N2907
JP1 UseSensorAlarm
OilWarn
D5
Q6 2N2907
RL5 VLatchingRelay
Trigger
Gnd
COM
NC
NO
BatteryFused5A
D1 SMBJ30CA-TR 15V
D3 10A100V
D14
C2 100uF
WiringWithControlBoard
RL1 EnginePower
RL2 EngineStart
RL3 EngineStop
RL4 GlowPlugs
Coil86
Coil85
SW30
Battery+
StarterSolenoidT30
StopSolenoid
D7 5A 600V
D8 10A 600V
D10 10A 600V
F1 FUSE 5A
F2 FUSE 30A
F3 6A Breaker
F4 6A breaker
F5 6A breaker
F6 FUSE 30A
F7 FUSE 15A
30A
8A
20A
12VSwitchedPower P5
StarterSolenoidT30 P3
StopSolenoid P4
GlowPlugs P6
EngineRoo
KeelControl
WindlassCo
Standard Volvo Penta Plugs
SB= Black, GR= Grey, W= White
R= Red, BN= Brown, Y= Yellow
P= Pink, BL= Blue, GN= Green
OR= Orange, VO= Violet
Wire codes. SB,BL,Y,R,W
Code always starts with SB.
Second code marks the connector,
3rd and 4th code marks the wire.
All these wires will probably be in a single conduit.
P8 VP EnginePlug
0V
FlywheelVP--GR
FlywheelVP+-GR/SB
StopSolenoid-VO
CoolantSensorVP-LBN
OilPressureVP-SB
ExcitationVP
SB,SB,BL
SB,SB,Y
SB,SB,R
SB,SB,W
SB,SB,SB,BL
SB,SB,SB,Y
SB,SB,SB,R
SB,SB,SB,W
P9 VP MultiLinkPlug
CanL-Y/GR
CanH-Y/W
MultiLink0V-SB
MultiLink12V-R
SB,BL,BL
SB,BL,Y
SB,BL,R
SB,BL,W
SB,BL,BL,BL
SB,BL,BL,Y
Sheet: /
File: EngineManagementSimpleWithRelays.sch
Title:
Size: A3
Date:
Rev:
KiCad E.D.A. eeschema 4.0.6
Id: 1/1