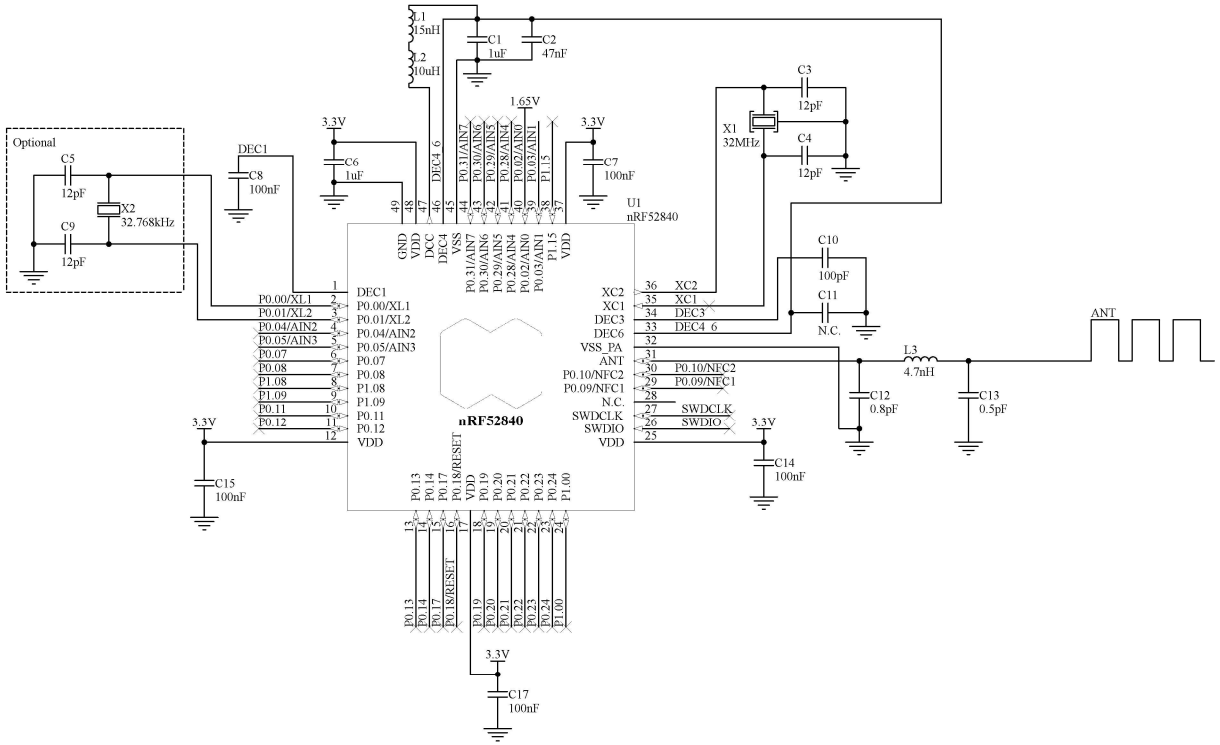

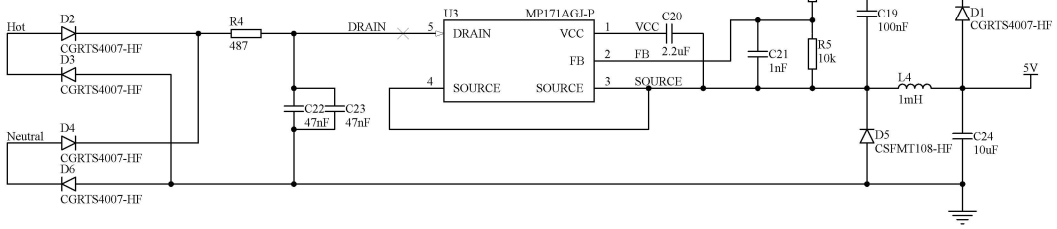

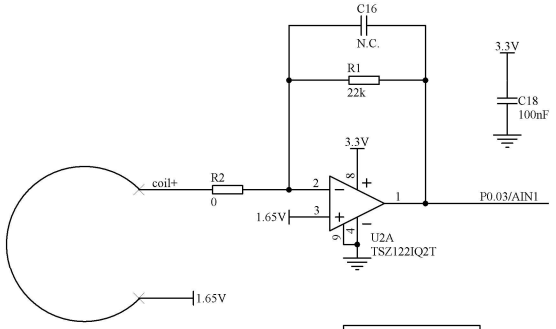

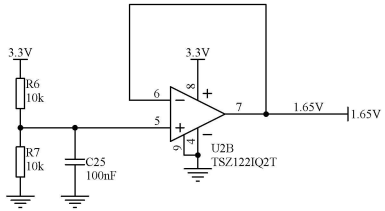

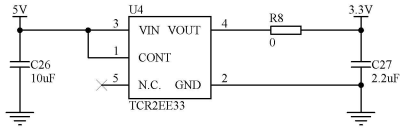

Title		
Size A3	Number	Revision
Date: 6-08-2022		Sheet of
File: C:\Users\..\Sheet1.SchDoc		Drawn By: