BLOCK WORK ACCESSORIES

SFSP manufactures Block Work Accessories in accordance with:
- BS EN 845-1:2013+A1:2016

Relevant Standards
- BS 1243:1978

Finishing
- Galvanized Steel according to BS EN 10346:2015
- Hot Dipped Galvanized according to BS EN ISO 1461:2009
- Stainless Steel according to BS EN 10088-2:2014

Materials

• **Hot rolled steel** S235JR as per EN 10025 / ASTM A-1011 CS Type B (formerly ASTM A569 or ASTM A570)

• **Cold rolled steel** DC01 as per EN 10130:2006 / ASTM A1008 CS Type B (formerly ASTM A-36) and then:

Manufacture Specifications:

- Steel Lintels - manufactured to BS 5977: Part 2 :1983 / BS EN 845-2:2013+A1:2016.
- Wall Ties - manufactured to BS EN 845-1:2003 (Formerly BS 1234).
- Block Reinforcement Ladder and Truss - manufactured as per ASTM A82 / ASTM A951 / BS EN 845-2:2013+A1:2016.

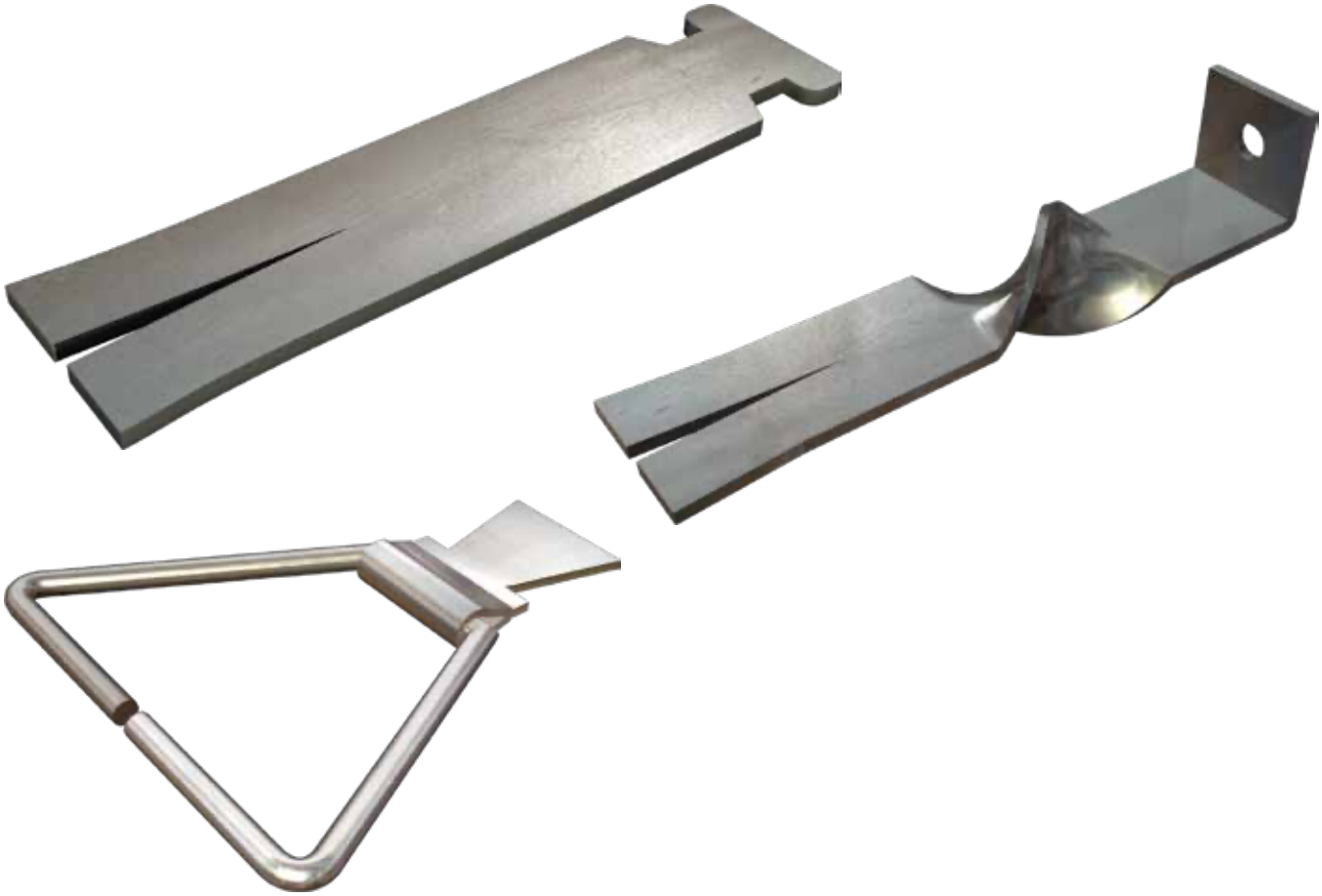

Head End Options

These ends have been manufactured to fit standard channel sections that is preset into concrete or surface fixed to any inner skin or structural ground

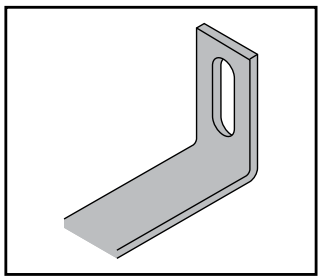

L-Angle Sloted

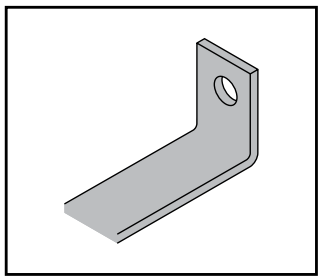

L-Angle Hole

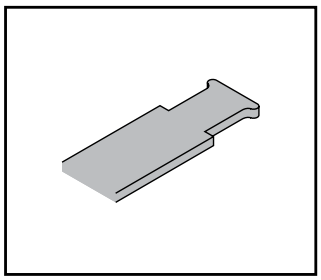

Plain

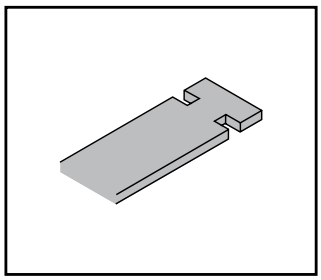

Plain

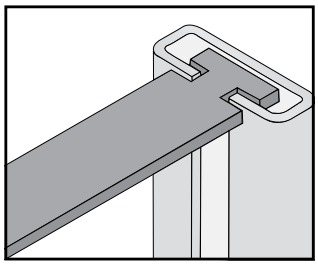

RCH / SCH Channel
REF: -/-/36

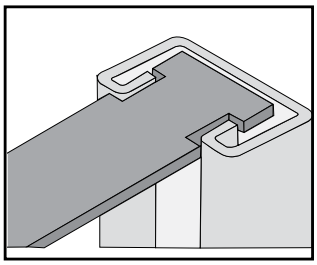

CCH Channel
REF: -/-/10

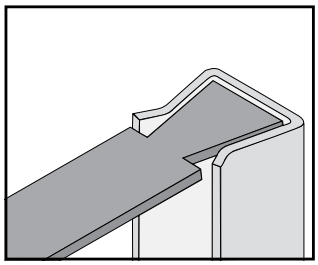

DCH Channel
REF: -/-/30

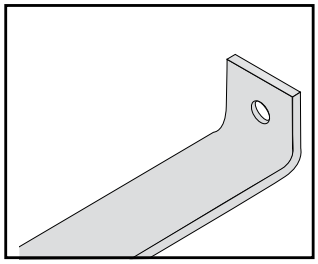

Bolt Screw Fixing
REF: -/-/50

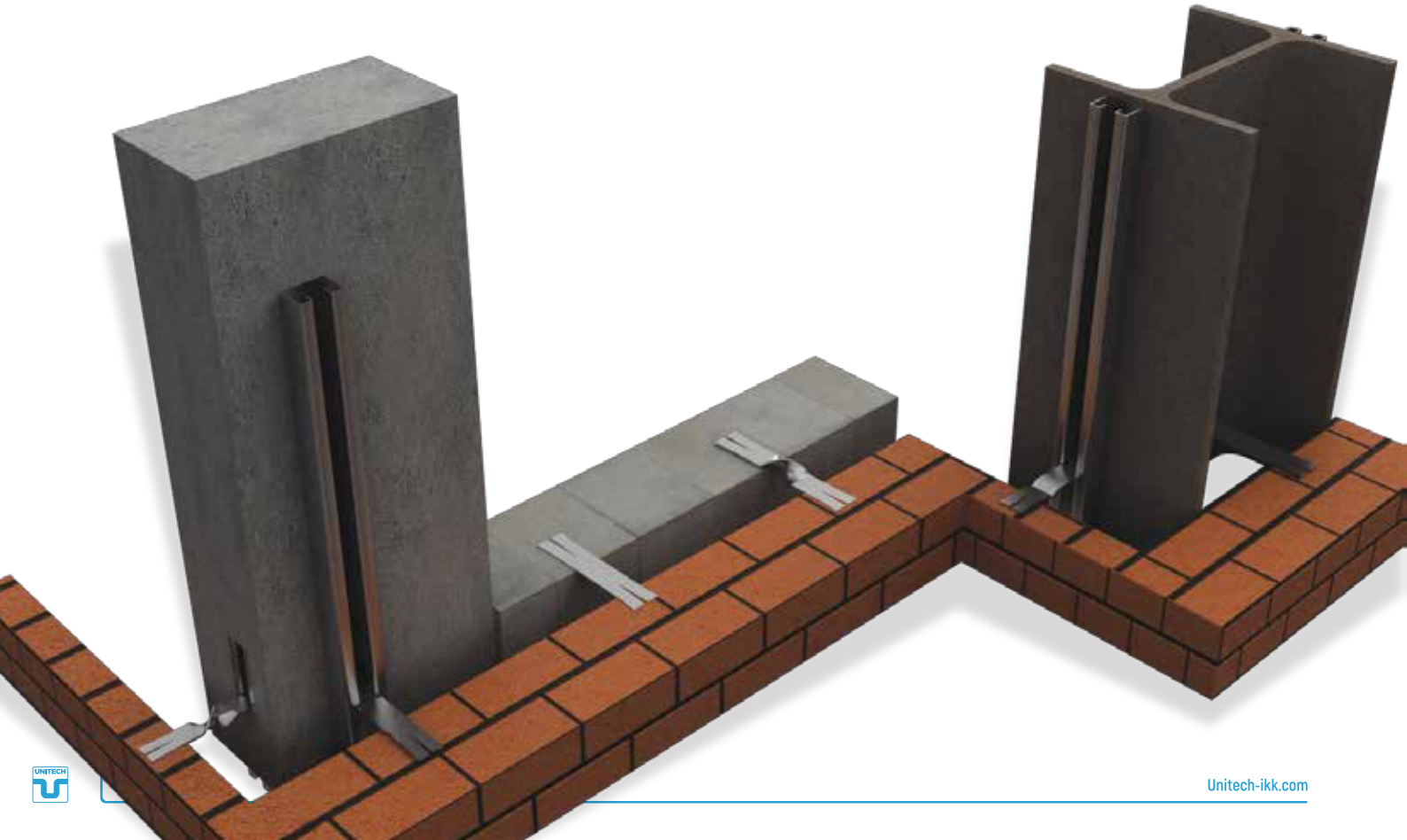

Tail End Options

The most common method of anchoring a tie to a slab facing, is by means of a round dowel into a drilled hole, split tangs on the tie may also be used. For bonding into brickwork the "Fishtailed" end is the traditional.

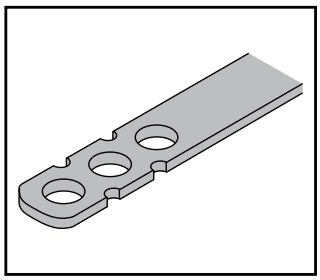

3 Holes

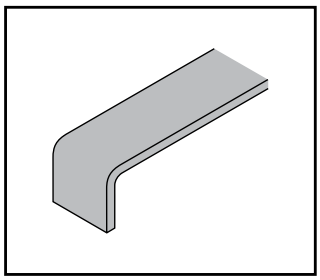

Turned Down

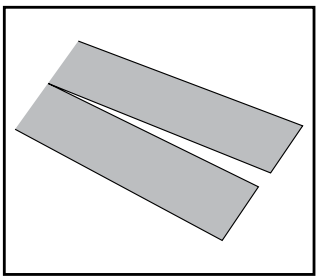

Split Tie

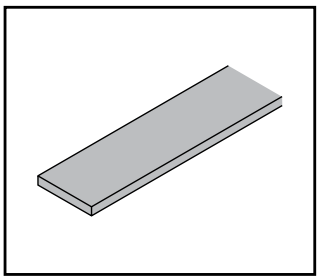

Plain

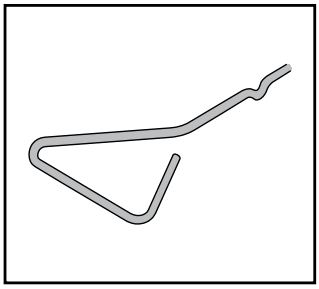

Returned Z

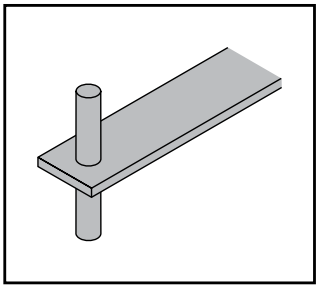

Plain with pin

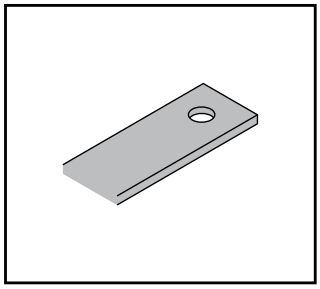

Plain 1 Hole

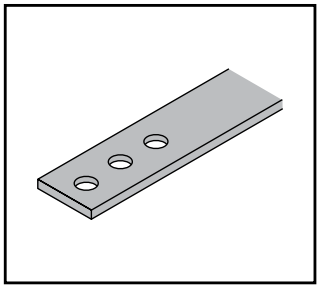

Plain 3 Holes

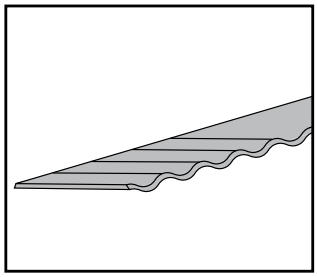

Corrugated

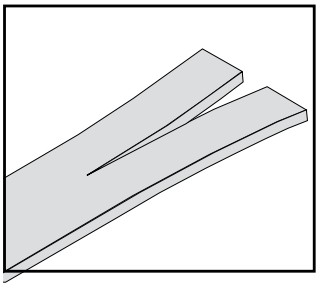

Fishtailed
REF: -/-/99

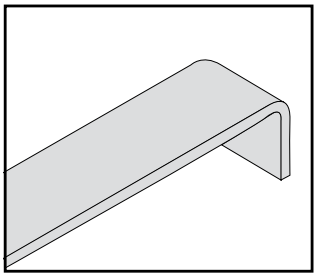

Turned Down
REF: -/-/88

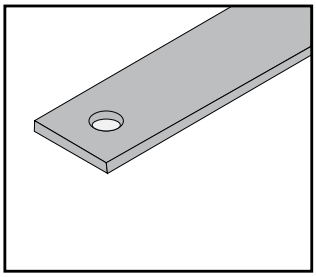

Dowel
REF: D/-/-

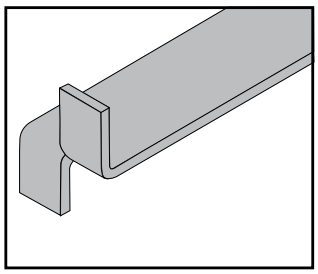

Split Tang
REF: S/-/-

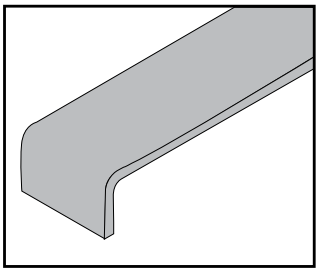

Turned Down
REF: T/-/-

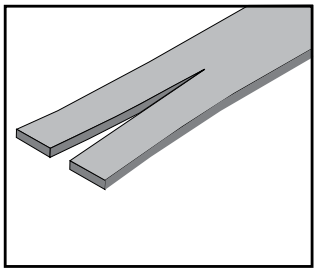

Fishtailed
REF: B/-/-

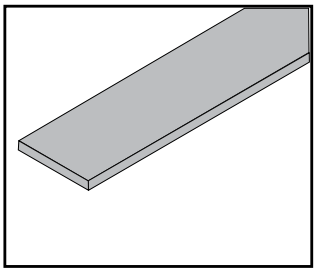

PLain
REF: P/-/-

Shank Options

Shanks may be plain or may include a drip to stop the passage of moisture across

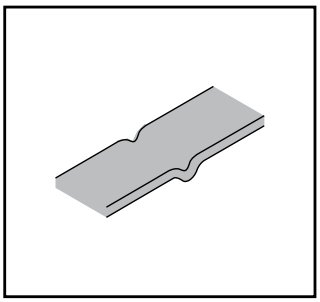

Drip

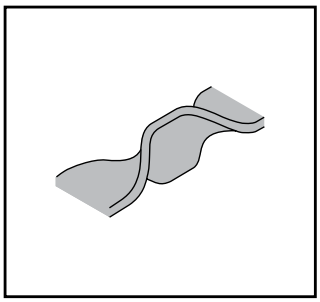

Double Twist

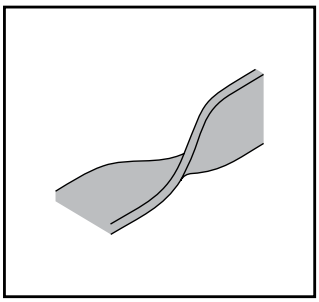

Half Twist

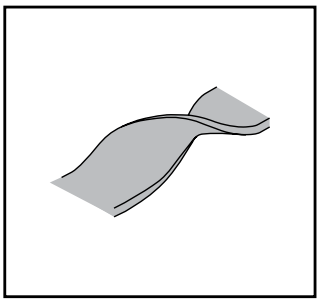

Full Twist

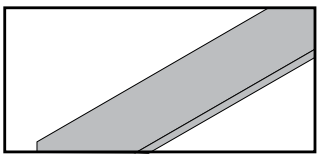

Plain
REF: -/P/-

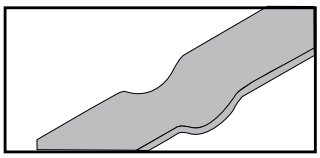

Dimpled
REF: -/D/-

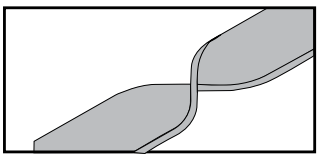

Full Twist
REF: -/F/-

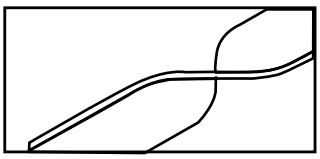

Half Twist
REF: -/H/-

Debonding Block Ties
REF: DS/-/-

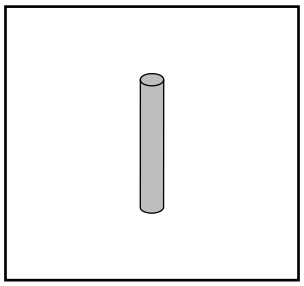

Pin

Rubber Sleeve
REF: S/-/-

Frame Cramps and Channel Ties

Frame cramps with a single 7mm diameter hole or an 8mm x 30mm vertical slot can be fixed to concrete, steelwork or masonry. M6 Single Expansion bolts are recommended for fixing to concrete, setscrews or self-drilling screws for steelwork, and suitable plugs and screws for fixing to masonry. Poor substrates will limit the capacity of frame crams and site treating is advisable in some cases. The performance will also be determined by the position of the fixing. Channel ties fixed to steelwork or concrete at the lowest point of slot will have a safe working load of approximately 1kN. The capacity will reduce as the fixing is moved further away from the bend and greater movement shall be expected than with other wall ties.

Block Ties Frame Cramps

Block Tie Corrugated with Bolt Screw Fixing

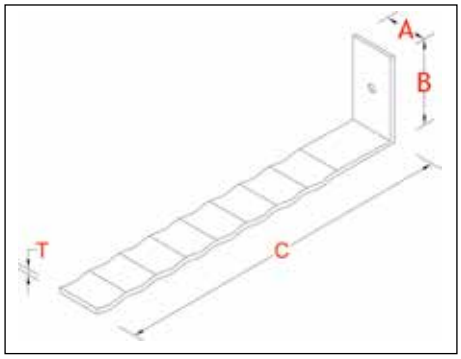

Item Number	Dimensions B x A x C x T (mm)	Material
SOBTL_F_00051209	30x50x150x1.50	MS (Mild Steel)
SOBTL_F_00055995	30x50x150x2.00	MS (Mild Steel)
SOBTL_F_00072009	30x50x200x2.00	MS (Mild Steel)
SOBTL_F_00061881	25x30x150x1.50	SS A4
SOBTL_F_00061887	25x30x150x2.00	SS A4
SOBTL_F_00051745	25x30x200x2.00	SS A4
SOBTL_F_00040664	25x40x150x2.00	SS A4
SOBTL_F_00041620	30x50x150x1.50	SS A4
SOBTL_F_00060949	30x50x150x2.00	SS A4
SOBTL_F_00058065	30x50x200x2.00	SS A4
SOBTL_F_00098679	50x50x200x2.00	SS A4
SOBTL_F_00083037	25x30x200x1.80	Galvanized
SOBTL_F_00067533	20x75x200x1.50	Galvanized
SOBTL_F_00040658	25x30x150x2.00	Galvanized
SOBTL_F_00075863	25x30x200x1.50	Galvanized
SOBTL_F_00051751	25x30x200x2.00	Galvanized
SOBTL_F_00047456	30x50x150x1.50	Galvanized
SOBTL_F_00054173	30x50x150x3.00	Galvanized
SOBTL_F_00040646	30x50x200x1.50	Galvanized
SOBTL_F_00070591	30x50x200x2.00	Galvanized
SOBTL_F_00047470	38x50x200x1.50	Galvanized
SOBTL_F_00040652	40x50x150x3.00	Galvanized

Three-Hole Block Tie

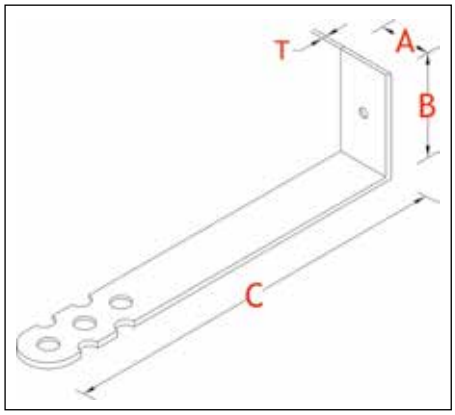

Item Number	Dimensions B x A x C x T (mm)	Material
SOBTL_F_00041440	30x50x150x1.50	Galvanized
SOBTL_F_00100265	20x30x150x3.00	Galvanized
SOBTL_F_00100277	20x30x250x3.00	Galvanized
SOBTL_F_00066019	20x30x255x3.00	Galvanized
SOBTL_F_00041352	25x30x150x1.50	Galvanized
SOBTL_F_00081473	25x30x200x1.50	Galvanized
SOBTL_F_00062449	25x30x200x1.80	Galvanized
SOBTL_F_00041382	25x30x200x2.00	Galvanized
SOBTL_F_00078877	30x40x200x1.50	Galvanized
SOBTL_F_00082981	30x40x200x2.00	Galvanized
SOBTL_F_00041418	30x40x300x2.00	Galvanized
SOBTL_F_00058771	25x30x200x2.00	SS A4
SOBTL_F_00062455	30x50x150x1.50	SS A4
SOBTL_F_00076763	30x50x200x1.50	SS A4
SOBTL_F_00108093	20x30x150x3.00	SS A6
SOBTL_F_00108099	20x30x250x3.00	SS A6
SOBTL_F_00100233	20x30x255x3.00	SS A6
SOBTL_F_00103203	25x30x200x2.00	SS A6

Block Tie Plain

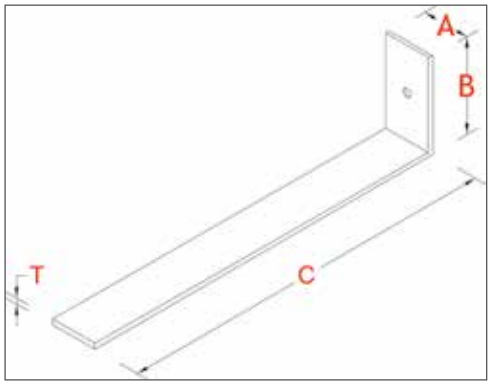

Item Number	Dimensions A x B x C x T (mm)	Material
SOBTL_F_00054089	27x80x150x2.00	Galvanized
SOBTL_F_00066031	20x30x150x3.00	Galvanized
SOBTL_F_00087065	20x30x200x3.00	Galvanized
SOBTL_F_00100271	20x30x250x3.00	Galvanized
SOBTL_F_00066025	20x30x255x3.00	Galvanized
SOBTL_F_00063351	25x20x175x2.00	Galvanized
SOBTL_F_00092561	25x30x100x1.50	Galvanized
SOBTL_F_00074445	25x30x150x1.50	Galvanized
SOBTL_F_00083007	25x30x150x1.80	Galvanized
SOBTL_F_00055601	25x30x150x3.00	Galvanized
SOBTL_F_00075813	25x30x175x2.00	Galvanized
SOBTL_F_00040462	25x30x200x1.80	Galvanized
SOBTL_F_00060781	25x30x200x2.00	Galvanized
SOBTL_F_00056241	25x50x120x1.80	Galvanized
SOBTL_F_00060861	25x50x200x1.50	Galvanized
SOBTL_F_00094155	25x50x250x1.80	Galvanized
SOBTL_F_00071285	27x30x120x1.50	Galvanized
SOBTL_F_00079703	27x40x120x2.00	Galvanized
SOBTL_F_00048196	27x45x125x1.50	Galvanized
SOBTL_F_00076497	27x45x125x2.00	Galvanized
SOBTL_F_00082997	27x45x140x2.00	Galvanized
SOBTL_F_00091779	27x50x125x2.00	Galvanized
SOBTL_F_00040698	27x50x150x1.50	Galvanized

Item Number	Dimensions A x B x C x T (mm)	Material
SOBTL_F_00110627	27x50x150x2.00	Galvanized
SOBTL_F_00104327	27x80x150x2.00	Galvanized
SOBTL_F_00040520	30x40x150x2.00	Galvanized
SOBTL_F_00089299	30x40x200x2.00	Galvanized
SOBTL_F_00060813	30x50x190x1.50	Galvanized
SOBTL_F_00076757	30x50x200x1.50	Galvanized
SOBTL_F_00058059	30x50x80x1.20	Galvanized
SOBTL_F_00047482	25x30x150x2.00	SS A4
SOBTL_F_00055589	25x30x150x3.00	SS A4
SOBTL_F_00060975	25x30x200x2.00	SS A4
SOBTL_F_00079719	27x40x120x2.00	SS A4
SOBTL_F_00041632	27x45x125x1.50	SS A4
SOBTL_F_00054061	27x45x125x2.00	SS A4
SOBTL_F_00051355	27x50x150x1.50	SS A4
SOBTL_F_00040704	27x80x150x2.00	SS A4
SOBTL_F_00060825	30x45x150x2.00	SS A4
SOBTL_F_00051349	30x50x150x1.50	SS A4
SOBTL_F_00060819	30x50x190x1.50	SS A4
SOBTL_F_00108105	20x30x250x3.00	SS A6
SOBTL_F_00100239	20x30x255x3.00	SS A6
SOBTL_F_00100251	27x45x125x1.50	SS A6
SOBTL_F_00082755	40x40x250x3.00	SS A6

Block Tie Plain

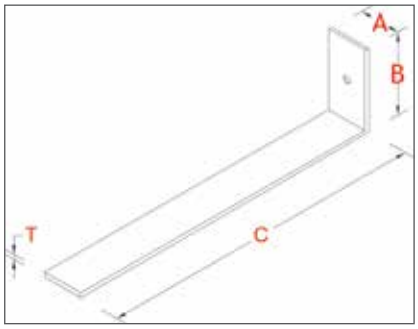

Item Number	Dimensions A x B x C x T (mm)	Material
SOBTL_F_00054089	27x80x150x2.00	Galvanized
SOBTL_F_00066031	20x30x150x3.00	Galvanized
SOBTL_F_00087065	20x30x200x3.00	Galvanized
SOBTL_F_00100271	20x30x250x3.00	Galvanized
SOBTL_F_00066025	20x30x255x3.00	Galvanized
SOBTL_F_00063351	25x20x175x2.00	Galvanized
SOBTL_F_00092561	25x30x100x1.50	Galvanized
SOBTL_F_00074445	25x30x150x1.50	Galvanized
SOBTL_F_00083007	25x30x150x1.80	Galvanized
SOBTL_F_00055601	25x30x150x3.00	Galvanized
SOBTL_F_00075813	25x30x175x2.00	Galvanized
SOBTL_F_00040462	25x30x200x1.80	Galvanized
SOBTL_F_00060781	25x30x200x2.00	Galvanized
SOBTL_F_00056241	25x50x120x1.80	Galvanized
SOBTL_F_00060861	25x50x200x1.50	Galvanized
SOBTL_F_00094155	25x50x250x1.80	Galvanized
SOBTL_F_00071285	27x30x120x1.50	Galvanized
SOBTL_F_00079703	27x40x120x2.00	Galvanized
SOBTL_F_00048196	27x45x125x1.50	Galvanized
SOBTL_F_00076497	27x45x125x2.00	Galvanized
SOBTL_F_00082997	27x45x140x2.00	Galvanized
SOBTL_F_00091779	27x50x125x2.00	Galvanized
SOBTL_F_00040698	27x50x150x1.50	Galvanized
SOBTL_F_00110627	27x50x150x2.00	Galvanized

Item Number	Dimensions A x B x C x T (mm)	Material
SOBTL_F_00104327	27x80x150x2.00	Galvanized
SOBTL_F_00094919	27x80x150x2.00	Galvanized
SOBTL_F_00040520	30x40x150x2.00	Galvanized
SOBTL_F_00089299	30x40x200x2.00	Galvanized
SOBTL_F_00060813	30x50x190x1.50	Galvanized
SOBTL_F_00076757	30x50x200x1.50	Galvanized
SOBTL_F_00058059	30x50x80x1.20	Galvanized
SOBTL_F_00047482	25x30x150x2.00	SS A4
SOBTL_F_00055589	25x30x150x3.00	SS A4
SOBTL_F_00055589	25x30x150x3.00	SS A4
SOBTL_F_00060975	25x30x200x2.00	SS A4
SOBTL_F_00079719	27x40x120x2.00	SS A4
SOBTL_F_00041632	27x45x125x1.50	SS A4
SOBTL_F_00054061	27x45x125x2.00	SS A4
SOBTL_F_00051355	27x50x150x1.50	SS A4
SOBTL_F_00040704	27x80x150x2.00	SS A4
SOBTL_F_00040704	27x80x150x2.00	SS A4
SOBTL_F_00054083	27x80x150x2.00	SS A4
SOBTL_F_00060825	30x45x150x2.00	SS A4
SOBTL_F_00051349	30x50x150x1.50	SS A4
SOBTL_F_00060819	30x50x190x1.50	SS A4
SOBTL_F_00108105	20x30x250x3.00	SS A6
SOBTL_F_00100239	20x30x255x3.00	SS A6
SOBTL_F_00100251	27x45x125x1.50	SS A6
SOBTL_F_00082755	40x40x250x3.00	SS A6

Block Tie Fish Tailed

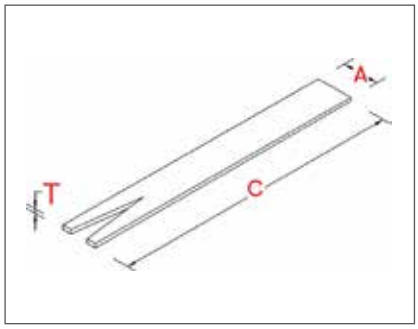

Item Number	Dimensions A x C x T (mm)	Material
SOBTS_F_00105757	25x250x2.00	Galvanized
SOBTS_F_00042500	25x200x1.50	Galvanized
SOBTS_F_00083025	25x200x1.80	Galvanized
SOBTS_F_00059167	25x200x2.00	Galvanized
SOBTS_F_00075635	25x200x3.00	Galvanized
SOBTS_F_00075647	25x200x3.00	Galvanized
SOBTS_F_00083053	25x250x2.00	Galvanized
SOBTS_F_00087297	25x300x2.00	Galvanized
SOBTS_F_00060799	30x200x1.50	Galvanized
SOBTS_F_00040670	30x200x1.80	Galvanized
SOBTS_F_00070597	30x200x2.00	Galvanized
SOBTS_F_00073211	30x220x1.50	Galvanized
SOBTS_F_00042536	30x225x2.00	Galvanized
SOBTS_F_00056073	30x300x2.00	Galvanized
SOBTS_F_00047506	35x100x1.20	Galvanized
SOBTS_F_00076545	50x200x2.00	Galvanized

Item Number	Dimensions A x C x T (mm)	Material
SOBTS_F_00076679	50x200x4.00	Galvanized
SOBTS_F_00071603	40x200x2.00	MS
SOBTL_F_00087877	50x200x3.00	SS A4
SOBTS_F_00057605	25x200x2.00	SS A4
SOBTS_F_00076779	25x200x2.50	SS A4
SOBTS_F_00075641	25x200x3.00	SS A4
SOBTS_F_00056649	25x225x2.00	SS A4
SOBTS_F_00109321	25x300x2.00	SS A4
SOBTS_F_00060793	30x200x1.50	SS A4
SOBTS_F_00058071	30x200x2.00	SS A4
SOBTS_F_00075819	30x225x2.00	SS A4
SOBTS_F_00057933	30x300x2.00	SS A4
SOBTS_F_00047494	35x100x1.20	SS A4
SOBTS_F_00105805	25x200x2.00	SS A6
SOBTS_F_00112815	30x200x2.00	SS A6
SOBTS_F_00112821	30x200x2.00	SS A6

DOVE TAIL (TWA)

Reference Codes

Each tie will consist of a tail element, for attachment to the facing material, a shank element, and a head element, for attachment to the structure.

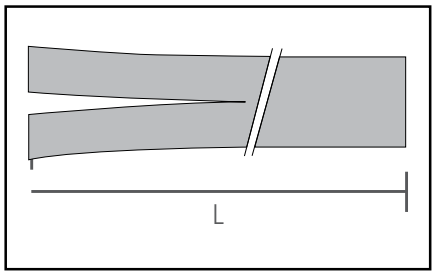

Fish Tail
REF: B/-/-

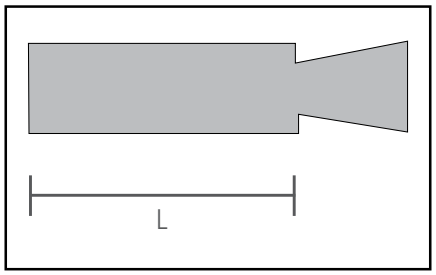

DCH -/-/30

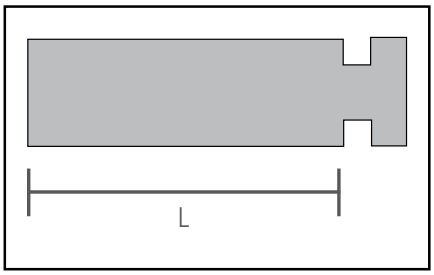

CCH -/-/10

ADJUSTABLE WALL TIE (AWT)

Device for connecting a masonry leaf across a cavity to another masonry leaf or to a structural frame to resist tension and compression forces while allowing limited differential movement in the plane of the wall.
Wall ties are an important element in the stability of cavity walls. The correct selection, spacing and installation of ties is recomended to avoid damp penetration and cracking of masonry. Wall ties may only be mounted in a horizontal position and in the plane (on level) between the masonry leaves of the cavity wall once the mortar has been applied on the block work, the tie must be embedded in the mortar, cover as well is top with mortar. The tie must be extend in the mortar joints at least 90 mm in the inner leaf and at least 65 mm in the outer leaf.
Wall ties are further sub classified as asymmetrical or symmetrical.
Wall ties is for us in the external walls, suitable for flat sites where basic wind speed is up to 30 m/s.

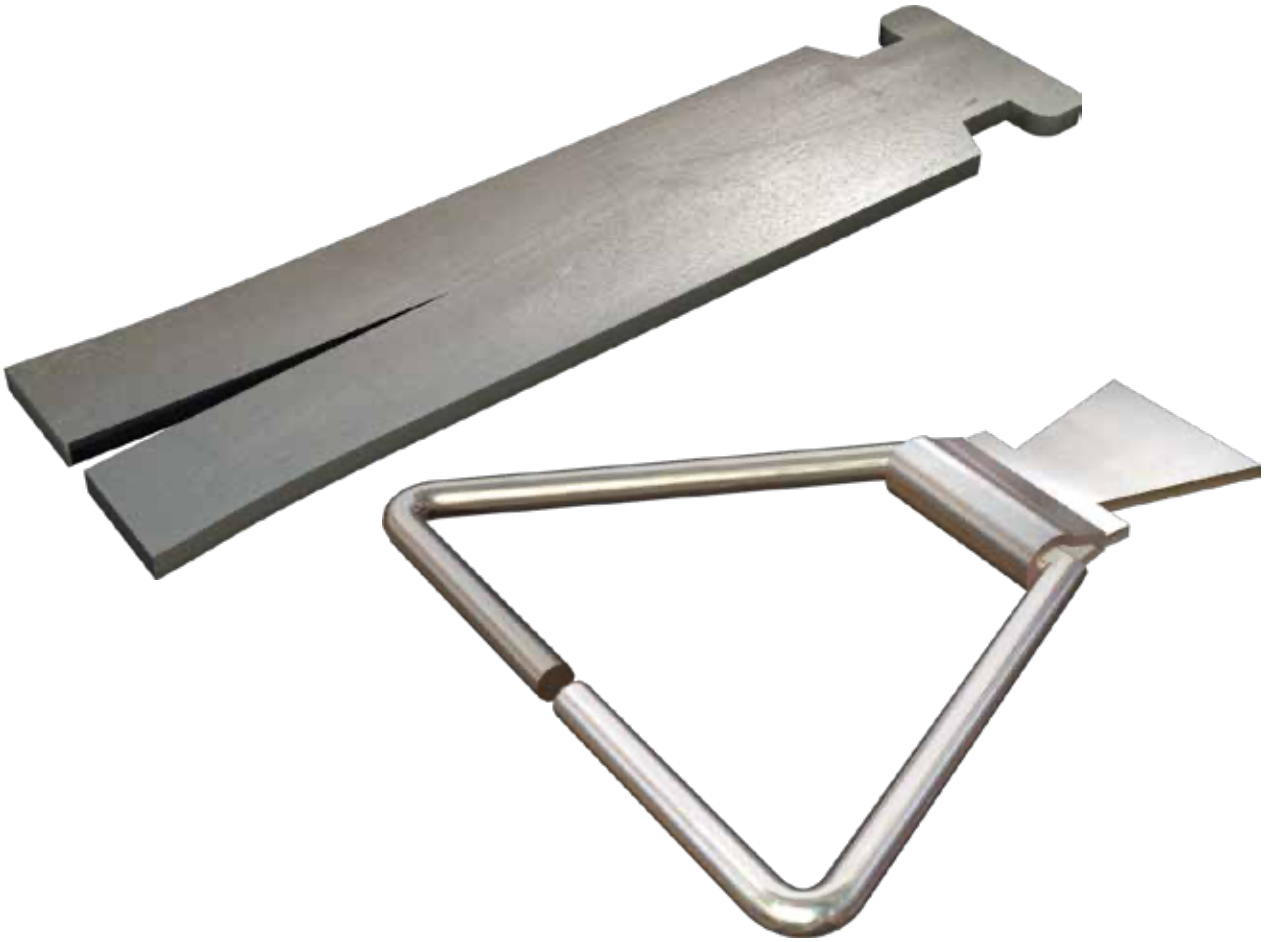

Installation of Ties

Wall ties shall be pressed down in and surrounded by fresh mortar.

To ensure cavity wall ties are effective at tying the leaves together they should be installed as the inner leaf is constructed not simply pushed into a joint.

Ties should be installed with a slight fall to the outer leaf, never towards the inner leaf as this could provide path for moisture to cross the cavity.

The drip part of the tie should point downwards and be positioned near the Centre of the open cavity.

Installed ties should be clear of mortar droppings to allow the drip to function and prevent water from crossing to the inner leaf of masonry.

LENGTH OF TIES IN MM TO SUIT CAVITY

				Cavity				
Tie	Reference Code	Description	Section Size (mm)	Length 0 - 20 (mm)	Length 15 - 45 (mm)	Length 40 -70 (mm)	Length 65 - 70 (mm)	Position of Drip (min) mm
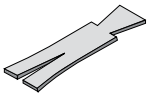	B/P/30	Brick Facing Tie	20 x 2.0 25 x 2.0	75	100	150	200	
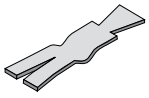	B/D/30	Brick Facing Tie	20 x 2.0 25 x 2.0		100	150	200	20
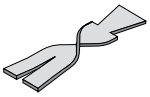	B/F/30	Brick Facing Tie	20 x 2.0 25 x 2.0			150	200	30
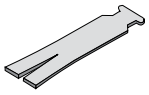	B/P/21	Brick Facing Tie	20 x 2.0 25 x 2.0	75	100	150	200	
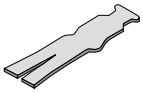	B/D/21	Brick Facing Tie	20 x 2.0 25 x 2.0		100	150	200	20
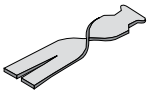	B/F/21	Brick Facing Tie	20 x 2.0 25 x 2.0		100	150	200	30
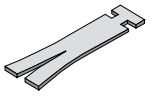	B/P/28	Brick Facing Tie	20 x 2.0 25 x 2.0	75	100	150	200	
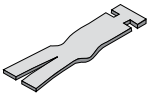	B/D/28	Brick Facing Tie	20 x 2.0 25 x 2.0		100	150	200	20
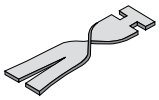	B/F/28	Brick Facing Tie	20 x 2.0 25 x 2.0			150	200	30
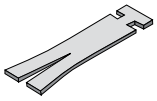	B/P/36	Brick Facing Tie	20 x 2.0 25 x 2.0	75	100	150	200	
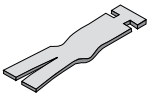	B/D/36	Brick Facing Tie	20 x 2.0 25 x 2.0		100	150	200	20
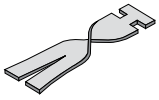	B/F/36	Brick Facing Tie	20 x 2.0 25 x 2.0			150	200	30

LENGTH OF TIES IN MM TO SUIT CAVITY

				Cavity				
Tie	Reference Code	Description	Section Size (mm)	Length 0 - 20 (mm)	Length 15 - 45 (mm)	Length 40 -70 (mm)	Length 65 - 70 (mm)	Position of Drip (min) mm
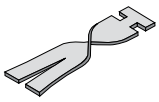	B/F/36	Brick Facing Tie	20 x 2.0 25 x 2.0			150	200	30
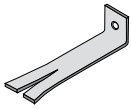	B/P/50	Brick Facing Tie	30 x 2.0 25 x 2.0	75	100			
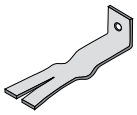	B/D/50	Brick Facing Tie	30 x 2.0 25 x 2.0		100			
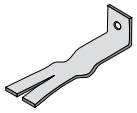	B/F/50	Brick Facing Tie	30 x 2.0 25 x 2.0					
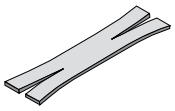	B/P/99	Cavity Wall Tie	30 x 2.0 25 x 2.0	150	200	250	300	
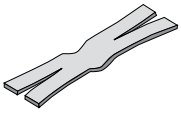	B/D/99	Cavity Wall Tie	30 x 2.0 25 x 2.0	150	200	250	300	
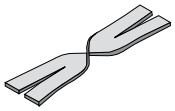	B/F/99	Cavity Wall Tie	30 x 2.0 25 x 2.0	150	200	250	300	
	C/C/30	Corrugated Strip	30 x 2.0 25 x 2.0	150	200	250	300	
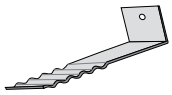	C/C/50	Corrugated Bracket	30 x 2.0 25 x 2.0	75	100	150	200	
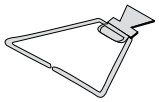	V/W/04	VEE Tie	ø 4,5,6	75	100	125	150	
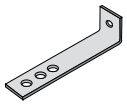	B/T/25	Wall Tie Anchor	30 x 2.0 25 x 2.0	75	100	125	150	
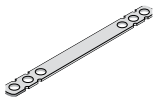	S/S/15	Cavity Wall Tie	30 x 2.0 25 x 2.0	150	200	250	300	

CAVITY WALL TIE INFORMATION

To comply with: DIN 1053, at least 5 pieces of cavity wall ties should be used per square meter in accordance with DIN 17440, material of SS. 1.4401 or SS 1.4571. Three additional wall ties are required for the edges of building.
The distance between the ties should be maximum 500 mm vertically, and not more than750 mm horizontally. The thickness of the wire tie depends on the height of the building and on the size of the wall cavity.
The minimum thickness is 3 mm. For walls that are higher than 12 m above ground level or where the gaps between the walls are more than 70 mm to 120 mm, a minimum of 5 wall ties with diameters of 4 mm are to be inserted.
If the gaps between the walls are more than 120 to 150 mm, a minimum of 7 wall ties with diameters of 4 mm or 5 wall ties with diameters of 5 mm are to be inserted. The length of the wall tie should be measured in such a way that the anchor is embedded 50 mm into the masonry and a further 25 mm is bent round. The thickness of the cavity and the thickness of the insulating material shall be added.

Cavity Wall Ties

Double Triangle Wall Tie, Butterfly & Three - Hole Wall Tie

Length of Tie and Embedment

Wall Ties should be of the correct length to ensure they are properly embedded in the masonry. The tie should have a minimum embedment of 50mm in each leaf but also take site tolerances into account for both cavity width and centering of the tie. For this reason, we suggest tie lengths which achieve an embedment of between 62.5mm and 75mm.
Recomended lengths to suit various cavity widths are shown for masonry-to-masonry wall ties.

Dimensional Standards

Fixed Dimensions
When Specifying ties certain set or minimum dimensions shall be followed, these are described as fixed dimensions and based on the limitations of material and the production processes.
Where a screw or bolt fixing is to be made a minimum length of 30mm is required.

Lengths
Lengths are generally measured to the extremity of the tie.
For ties fitting into channels the specified length is measured to the shoulder of the tie.

Wire Ties
A range of cavity wall ties are available manufactured in accordance with BS EN 845-1 which supersedes BS 1243. These are available in stainless steel, pre-galvanized or hot-dip galvanized steel, and to the dimensions shown.

Installation of ties

Wall ties should be pressed down in, and surrounded by, fresh mortar.
To ensure cavity wall ties are effective at tying the leaves together they should be installed as the inner leaf is constructed and not simply pushed into a joint. Ties should be installed with a slight fall to the outer leaf, never to wards the inner leaf as this could provide a path for moisture to cross the cavity. The drip part of the tie should point downwards and be positioned near the centre of the open cavity. Installed ties should be clear of mortar droppings to allow the drip to function and prevent water from crossing to the inner leaf of masonry.

BUTTERFLY TIE /TRIANGLE TIE

Wire Ties

A range of cavity wall ties are available manufactured in accordance with BS 123:1978. These are available in stainless steel, pre-galvanized or hot-dip galvanized steel, and to the dimensions shown.

BUTTERFLY TIE

Item Number	Dimensions (mm)	Material
SOBTS_F_00088791	30x190x3.00	SS A4
SOBTS_F_00088797	30x190x3.00	SS A4
SOBTS_F_00209271	30x200x1.50	SS A4
SOWR_F_00053777	75x200x3.00	SS A4
SOWR_F_00083659	65x200x4.00	SS A4
SOWR_F_00186287	75x250x3.00	SS A4
SOWR_F_00186293	75x200x3.00	Galvanized
SOWR_F_00186695	65x200x4.00	Galvanized
SOWR_F_00191971	75x200x4.00	Galvanized
SOWR_F_00192599	65x390x4.00	Galvanized
SOWR_F_00193189	65x360x4.00	Galvanized
SOWR_F_00193195	65x150x4.00	Galvanized
SOWR_F_00197769	65x250x4.00	Galvanized
SOWR_F_00209821	75x300x4.00	Galvanized

TRIANGLE TIE

Item Number	Dimensions (mm)	Material
SOWR_F_00056205	50x250x4.80	Galvanized
SOWR_F_00056211	65x250x4.80	Galvanized
SOWR_F_00056217	65x300x4.80	Galvanized
SOWR_F_00056655	50x250x4.80	Galvanized
SOWR_F_00056667	65x250x4.80	Galvanized
SOWR_F_00056679	65x300x4.80	Galvanized
SOWR_F_00057547	65x250x4.80	Galvanized
SOWR_F_00057553	65x300x4.80	Galvanized
SOWR_F_00059173	120X50X5.00	Galvanized
SOWR_F_00072175	80x250x4.80	Galvanized
SOWR_F_00081543	65x200x4.00	Galvanized
SOWR_F_00127819	75x250x4.00	Galvanized

TRIANGLE TIE

Item Number	Dimensions (mm)	Material
SOWR_F_00127825	75x300x4.00	Galvanized
SOWR_F_00140557	65x200x3.00	Galvanized
SOWR_F_00141359	65x200x3.00	Galvanized
SOWR_F_00143965	30x200x4.00	Galvanized
SOWR_F_00144499	65x200x4.00	Galvanized
SOWR_F_00054103	65x250x5.00	SS A4
SOWR_F_00056187	65x300x4.80	SS A4
SOWR_F_00056193	65x250x4.80	SS A4
SOWR_F_00056199	50x250x4.80	SS A4
SOWR_F_00056661	50x250x4.80	SS A4
SOWR_F_00056673	65x250x4.80	SS A4
SOWR_F_00056685	65x300x4.80	SS A4
SOWR_F_00057559	65x250x4.80	SS A4
SOWR_F_00059179	120X50X5.00	SS A4
SOWR_F_00064501	65x200x4.00	SS A4
SOWR_F_00072169	80x250x5.00	SS A4
SOWR_F_00086815	65x150x4.00	SS A4
SOWR_F_00098931	65x250x4.00	SS A4
SOWR_F_00196385	65x200x3.00	SS A4

Butterfly

Double Triangle

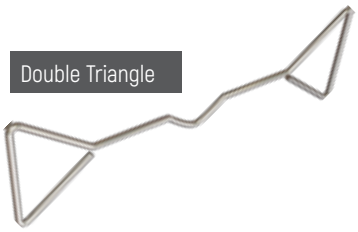

ARRANGEMENT OF ADDITIONAL TIE CRAMPS

For walls in which both leaves are 90mm or thicker, ties should be used at not less than 2.5 per square meter (900mm horizontal and 450mm vertical centers). This spacing may be varied by building regulations.

Ties should be evenly distributed over the wall area, except around openings, and should be preferable staggers.

At vertical edges of an opening, unreturned or unbounded edges, and vertical expansion joints, additional ties should be used. Such ties should be located at 300 mm vertical centers, positioned not more than 225 mm from the edge.

3 pieces wall ties per meter, additional ties should be installed:
- At edge (corner)
- Along expansion joints
- At opening
- At the upper end

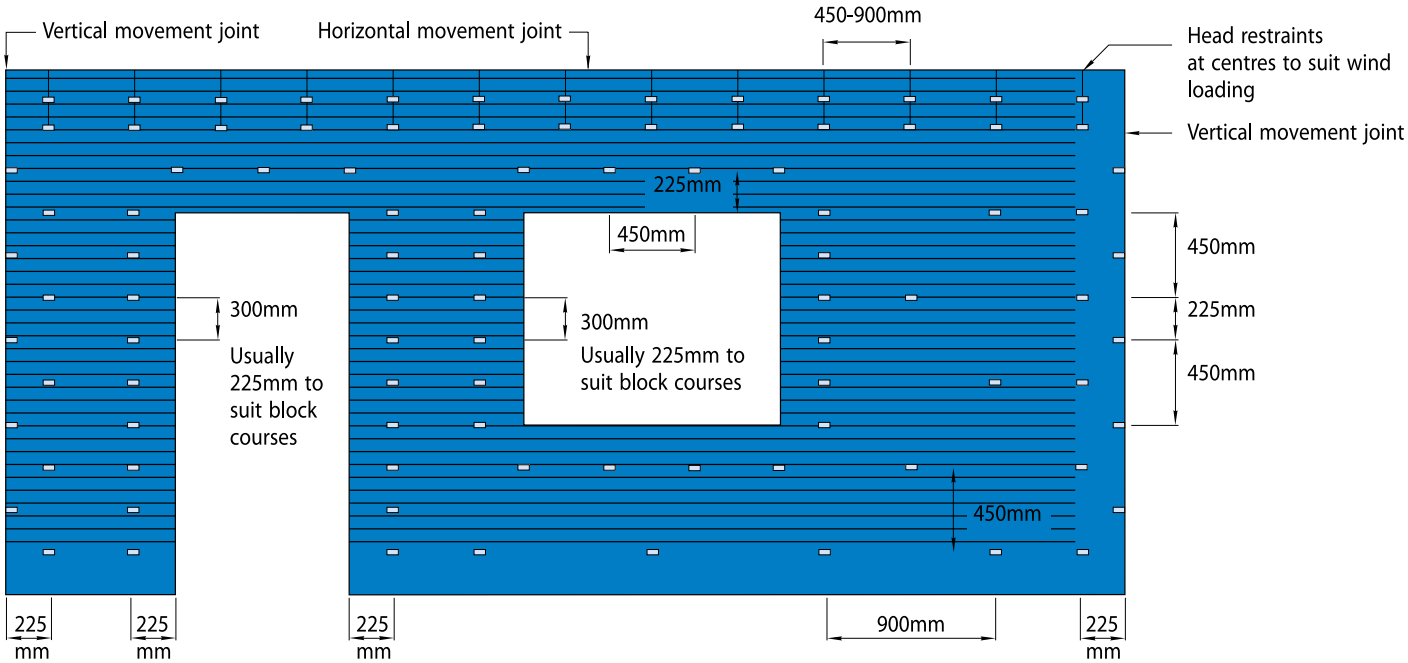

Cavity Tie Corrugated

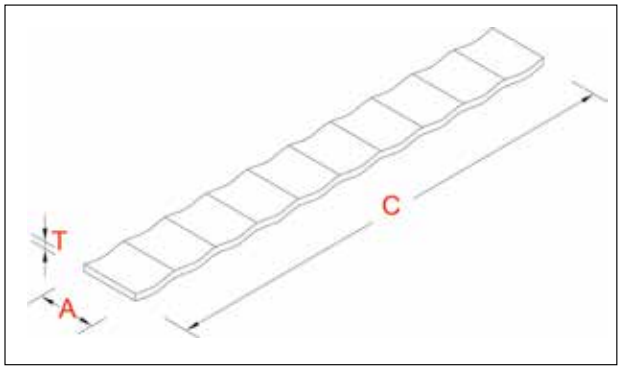

Item Number	Dimensions A x C x T (mm)	Material
SOBTS_F_00054161	25x200x2.00	Galvanized
SOBTS_F_00072153	25x200x3.00	Galvanized
SOBTS_F_00070927	30x200x1.50	Galvanized
SOBTS_F_00054167	25x200x2.00	AA S4
SOBTS_F_00047488	30x200x1.50	AA S4
SOBTS_F_00093737	30x250x2.00	AA S4
SOBTS_F_00105763	40x250x2.00	AA S4
SOBTS_F_00041650	25x200x3.00	AA S6
SOBTS_F_00041638	25x200x3.00	AA S6

Cavity Tie With 3Holes

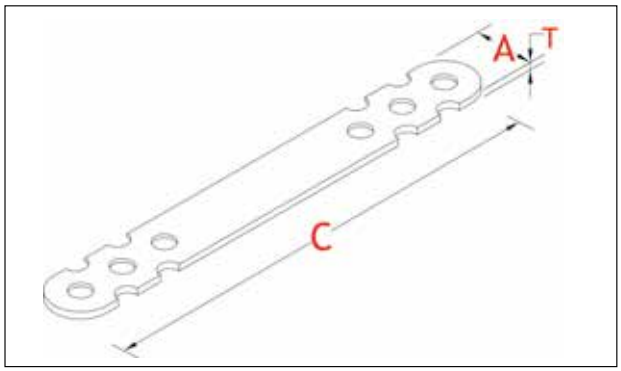

Item Number	Dimensions A x C x T (mm)	Material
SOBTS_F_00082303	20x200x3.00	Galvanized
SOBTS_F_00082291	20x255x3.00	Galvanized
SOBTS_F_00082297	20x255x3.00	Galvanized
SOBTS_F_00078577	25x200x1.80	Galvanized
SOBTS_F_00047500	25x200x2.00	Galvanized
SOBTS_F_00095639	25x250x2.00	Galvanized
SOBTS_F_00112385	30x300x1.50	Galvanized
SOBTS_F_00077039	30x300x1.50	Mild Steel
SOBTS_F_00058777	25x200x2.00	AA S4

Cavity Tie Fish Tailed

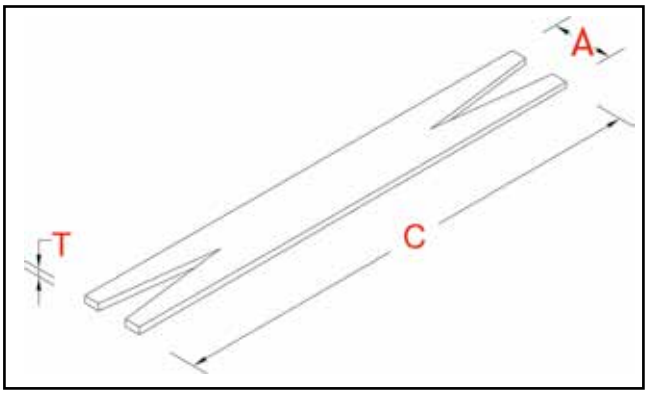

Item Number	Dimensions A x C x T (mm)	Material
SOBTS_F_00105757	25x250x2.00	Galvanized
SOBTS_F_00042500	25x200x1.50	Galvanized
SOBTS_F_00083025	25x200x1.80	Galvanized
SOBTS_F_00059167	25x200x2.00	Galvanized
SOBTS_F_00075635	25x200x3.00	Galvanized
SOBTS_F_00075647	25x200x3.00	Galvanized
SOBTS_F_00083053	25x250x2.00	Galvanized
SOBTS_F_00087297	25x300x2.00	Galvanized
SOBTS_F_00060799	30x200x1.50	Galvanized
SOBTS_F_00040670	30x200x1.80	Galvanized
SOBTS_F_00070597	30x200x2.00	Galvanized
SOBTS_F_00073211	30x220x1.50	Galvanized
SOBTS_F_00042536	30x225x2.00	Galvanized
SOBTS_F_00056073	30x300x2.00	Galvanized
SOBTS_F_00047506	35x100x1.20	Galvanized
SOBTS_F_00076545	50x200x2.00	Galvanized
SOBTS_F_00076679	50x200x4.00	Galvanized
SOBTS_F_00071603	40x200x2.00	Mild Steel

Item Number	Dimensions A x C x T (mm)	Material
SOBTL_F_00087877	50x200x3.00	AA S4
SOBTS_F_00057605	25x200x2.00	AA S4
SOBTS_F_00076779	25x200x2.50	AA S4
SOBTS_F_00075641	25x200x3.00	AA S4
SOBTS_F_00056649	25x225x2.00	AA S4
SOBTS_F_00109321	25x300x2.00	AA S4
SOBTS_F_00060793	30x200x1.50	AA S4
SOBTS_F_00058071	30x200x2.00	AA S4
SOBTS_F_00075819	30x225x2.00	AA S4
SOBTS_F_00057933	30x300x2.00	AA S4
SOBTS_F_00047494	35x100x1.20	AA S4
SOBTS_F_00105805	25x200x2.00	AA S4
SOBTS_F_00112815	30x200x2.00	AA S4
SOBTS_F_00112821	30x200x2.00	AA S4

DEBONDING CAVITY BLOCK TIE

Specifications:

Unitech Debonding Block Tie are manufactured from the following:
A. Galvanized Steel Sheet: BS 2989, ASTM A 653M, Commercial Steel, Z 180 zinc coating.
B. Stainless Steel Sheet: ASTM A 666, Type 304/Type 316.

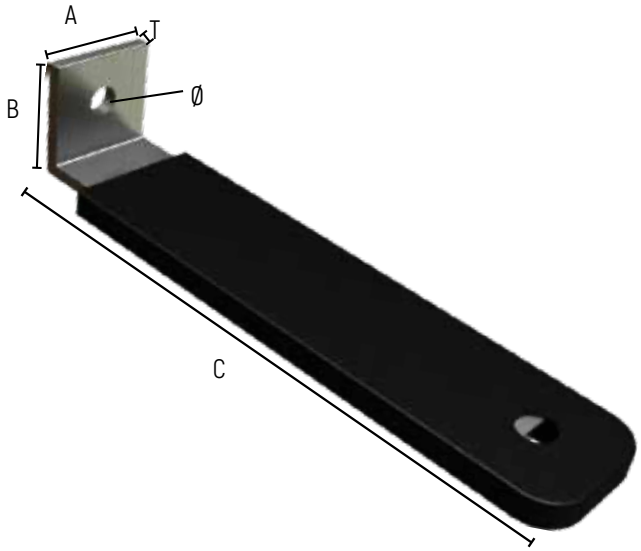

Item Number	Dimensions AxBxCxT (mm)	Material
SOBTL_F_00144677	25x30x300x1.50	Galvanized
SOBTL_F_00144689	25x30x300x3.00	Galvanized
SOBTL_F_00144701	25x30x75x1.50	Galvanized
SOBTL_F_00144713	25x30x75x3.00	Galvanized
SOBTL_F_00144733	30x40x300x1.50	Galvanized
SOBTL_F_00144769	30x40x300x3.00	Galvanized
SOBTL_F_00144903	30x40x75x1.50	Galvanized
SOBTL_F_00144915	30x40x75x3.00	Galvanized
SOBTS_F_00144933	25x150x1.50	Galvanized
SOBTS_F_00144927	25x300x1.50	Galvanized
SOBTS_F_00144945	25x300x3.00	Galvanized
SOBTL_F_00144683	25x30x300x1.50	AA S4
SOBTL_F_00144695	25x30x300x3.00	AA S4
SOBTL_F_00144707	25x30x75x1.50	AA S4
SOBTL_F_00144719	25x30x75x3.00	AA S4
SOBTL_F_00144755	30x40x300x1.50	AA S4
SOBTL_F_00144783	30x40x300x3.00	AA S4
SOBTL_F_00144909	30x40x75x1.50	AA S4
SOBTL_F_00144921	30x40x75x3.00	AA S4

DEBONDING CONTROL JOINTS FLAT TIE

Specifications:

SFSP Debonding Control Joints Tie are manufactured from the following:
A. Galvanized Steel Sheet: BS 2989, ASTM A 653M, Commercial Steel, Z 180 zinc coating.
B. Stainless Steel Sheet: ASTM A 666, Type 304/Type 316.

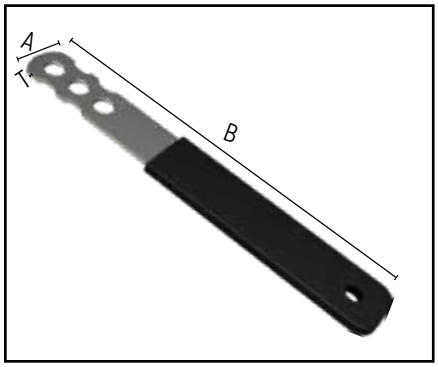

Item Number	Dimensions AxBxT (mm)	Material
SOBTS_F_00144933	25x150x1.5	GI
SOBTS_F_00144927	25x300x1.5	GI
SOBTS_F_00260705	25x150x3.0	GI
SOBTS_F_00144945	25x300x3.0	GI
SOBTS_F_00207939	30x150x1.5	GI
SOBTS_F_00260711	30x300x1.5	GI
SOBTS_F_00260717	30x150x3.0	GI
SOBTS_F_00144957	25x150x1.5	SS A2/A4
SOBTS_F_00144939	25x300x1.5	SS A2/A4
SOBTS_F_00260731	25x150x3.0	SS A2/A4
SOBTS_F_00144951	25x300x3.0	SS A2/A4
SOBTS_F_00207939	30x150x1.5	SS A2/A4
SOBTS_F_00260737	30x300x1.5	SS A2/A4
SOBTS_F_00260743	30x150x3.0	SS A2/A4
SOBTS_F_00260749	30x300x3.0	SS A2/A4

HAMMER-ON SECTION

Available in five sizes to accommodate a steel thickness from 7mm to 25mm, this fixing is simply hammered onto the flange. It can be utilized either on a column with a tie or on a beam with an internal head restraint.

The Hammer-On Section resists load in one direction only and should be installed on alternate sides of the flange.
Hammer-On Ties should be installed at 225mm vertical centres and Hammer-On Head Restraints at 450mm horizontal centres. The wall tie or head restraint should be positioned central to the masonry leaf when located in one of the five fixing slots.
Hammer-On Tie (Debonded HOS-TIE, pictured above, supplied complete with Hammer-On Section)
Hammer-On Ties can resist a load of 900N. When fixed at 225mm vertical centres, staggered on alternate sides of the column flange (effective centres 450mm on each side) the service load will be 2kN per metre in either direction.

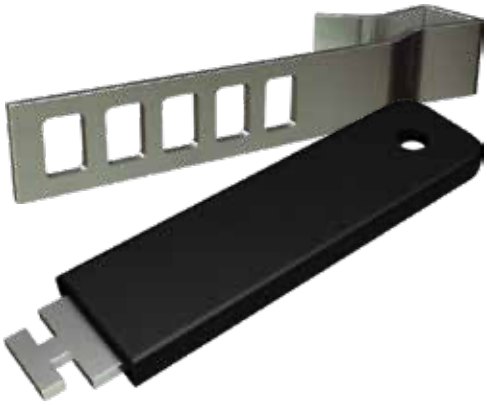

Hammer-On Ties installed to alternate sides of the column at 225mm vertical centres

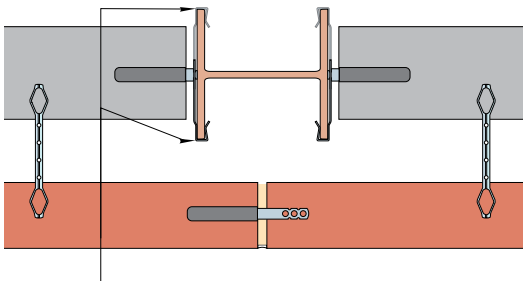

R2-TYPE WIRE TIE

Stainless steel wall tie manufactured in accordance with BS EN 845-1
- Diameter = 4mm, 5mm
Other sizes can be manufactured upon request

Item Number	Dimensions (mm)	Material
SOWR_F_00125253	65x150x5.00	GI
SOWR_F_00145343	65x200x5.00	GI
SOWR_F_00145355	65x200x4.00	GI
SOWR_F_00145361	65x250x4.00	GI
SOWR_F_00145381	65x300x4.00	GI
SOWR_F_00142105	50x200x4.00	SS A4
SOWR_F_00145337	65x150x5.00	SS A4
SOWR_F_00145349	65x200x5.00	SS A4
SOWR_F_00145375	65x250x4.0	SS A4
SOWR_F_00145387	65x300x4.00	SS A4

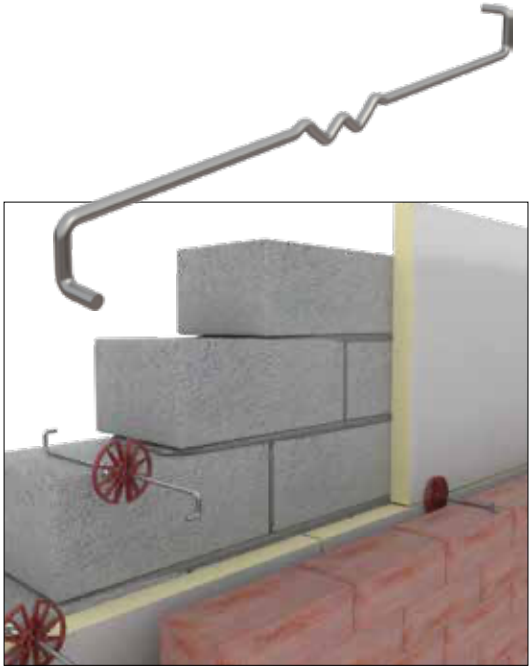

Z- TYPE WIRE TIE

-"Z" Wire Tie is used for tying masonry to masonry (Composite Wall Only).
-Not used in walls with air space and or insulation.
- Diameter = 4mm, 5mm
Other sizes can be manufactured upon request

Item Number	Dimensions (mm)	Material
SOWR_F_00125211	65x200x3.00	GI
SOWR_F_00125253	50x100x5.00	GI
SOWR_F_00133003	65x200x4.0	GI

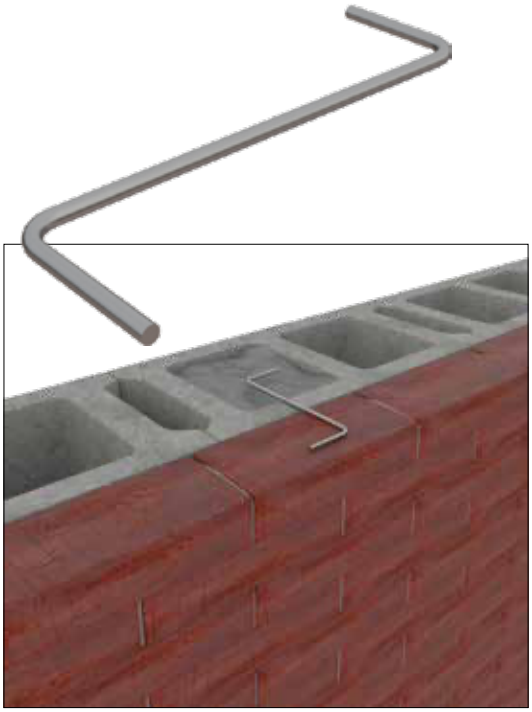

Adjustable Head Restraint (AHR)

Head Restraints

Head Restraints provide the necessary restraint to the top of masonry walls. They allow for vertical movement to accommodate shrinkage or thermal movement of the wall or structural frame, while restraining wind loads.

Internal Head Restraint

The Internal Head is used for restraining the top of internal walls or the top of the inner leaf of a cavity wall.

The opening at the front of the channel stem is sealed to prevent mortar ingress and to ensure that vertical movement can take place between the block work and the structure.

The base of the stem must be built within a bed joint with the centre of the stem no closer than 50mm from the edge of the block.

The vertical joint should be filled with mortar each side of the stem.

The maximum joint between the top of the block work and the underside of the frame is not normally greater than 25mm.

The standard of head restraint will suit a 215mm high block and can resist a load of 1.5kN*.

Where the gap at the top increases from 25mm to 50mm, the working load is reduced from 1.5kN to 1.0kN.

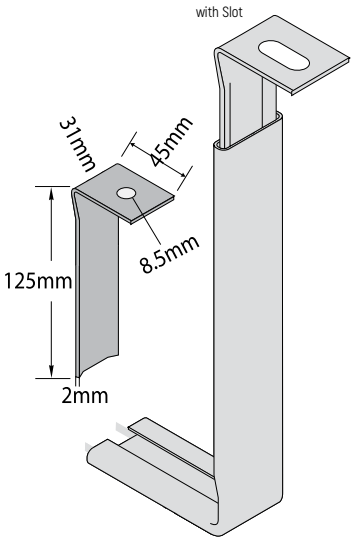

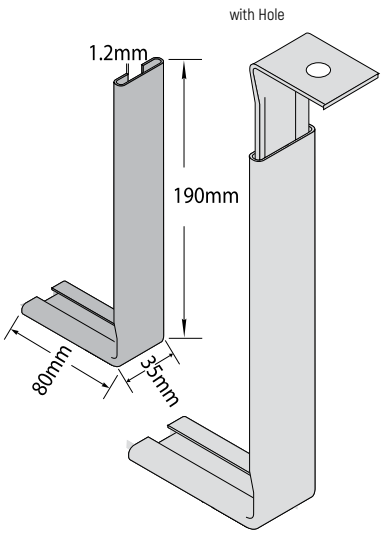

Item Number	Dimensions (mm)	Material
SOL_F_00072159	30x110x200x1.20	GI
SOL_F_00063427	30x140x200x1.20	GI
SOL_F_00100983	30x40x200x1.20	GI
SOL_F_00051377	30x80x150x1.20	GI
SOL_F_00083071	30x80x150x1.20	GI
SOL_F_00048182	30x80x190x1.20	GI
SOL_F_00094205	30x80x200x1.20	GI
SOL_F_00079697	30x90x200x1.20	GI
SOL_F_00083609	30x95x200x1.20	GI
SOL_F_00065897	30x95x200x1.50	GI
SOS_F_00092555	30x200x1.20	GI
SOL_F_00040714	30x110x200x1.20	SS A4
SOL_F_00054055	30x140x200x1.20	SS A4
SOL_F_00060839	30x80x150x1.20	SS A4
SOL_F_00041626	30x80x190x1.20	SS A4
SOL_F_00094221	30x80x200x1.20	SS A4
SOL_F_00079713	30x90x200x1.20	SS A4
SOL_F_00100245	30x80x190x1.20	SS A4
GNA_F_00066003	50X22X110X60X3.0	Hot Dip Galvanized
GNA_F_00092567	25x30x100x1.5-30x200x1.2	GI
GNA_F_00079729	27x40x120x2-30x200x90x1.2	GI
GNA_F_00053073	27x45x125x1.5-30x80x190x1.2	GI
GNA_F_00083077	27x45x125x2-30x80x150x1.2	GI
GNA_F_00072165	27x80x150x2-30x100x200x1.2	GI
GNA_F_00104333	27x80x150x2-30x140x200x1.2	GI
GNA_F_00053553	30X40X200X1.2-30X50X150X1.5	GI
GNA_F_00076503	27X45X125X2 30X80X190X1.2	GI
GNA_F_00094211	27X45X125X2 30X80X200X1.2	GI
GNA_F_00091785	27X50X125 30X80X190X1.2MM	GI
GNA_F_00079725	27x40x120x2-30x200x90x1.2	SS A4
GNA_F_00060845	30x80x150x1.2 tie 30x45x150x2.0	SS A4
GNA_F_00048206	27x45x125x1.5-30x80x190x1.2	SS A2
GNA_F_00041898	30X80X190X1.2-27X45X125X1.5	SS A2
GNA_F_00076487	27X45X125X2 - 30X80X190X1.2	SS A2
GNA_F_00095661	30X200X140X1.2-27X45X125X2.0	SS A2
GNA_F_00054095	30X200X110X1.2-27X80X150X2.0	SS A2
GNA_F_00094227	30X200X80X1.2-27X45X125X2.0	SS A2
GNA_F_00093689	30X200X110X1.2-27X80X150X2.0	GI
GNA_F_00054099	30X200X110X1.2MM-27X80X150X2.0	Hot Dip Galvanized

Partition Top Angle (PTA)

Angle Support

- Partition Top angle prevents a horizontal movement of the masonry wall.
- Supports the horizontal force on top of the block work due to human impact or wind pressure.
- To be fixed on both sides of the wall.
- To be fixed with 2x M6 Screw with plastic anchor.
- Provides support while preventing a solid connection between the wall and the ceiling.

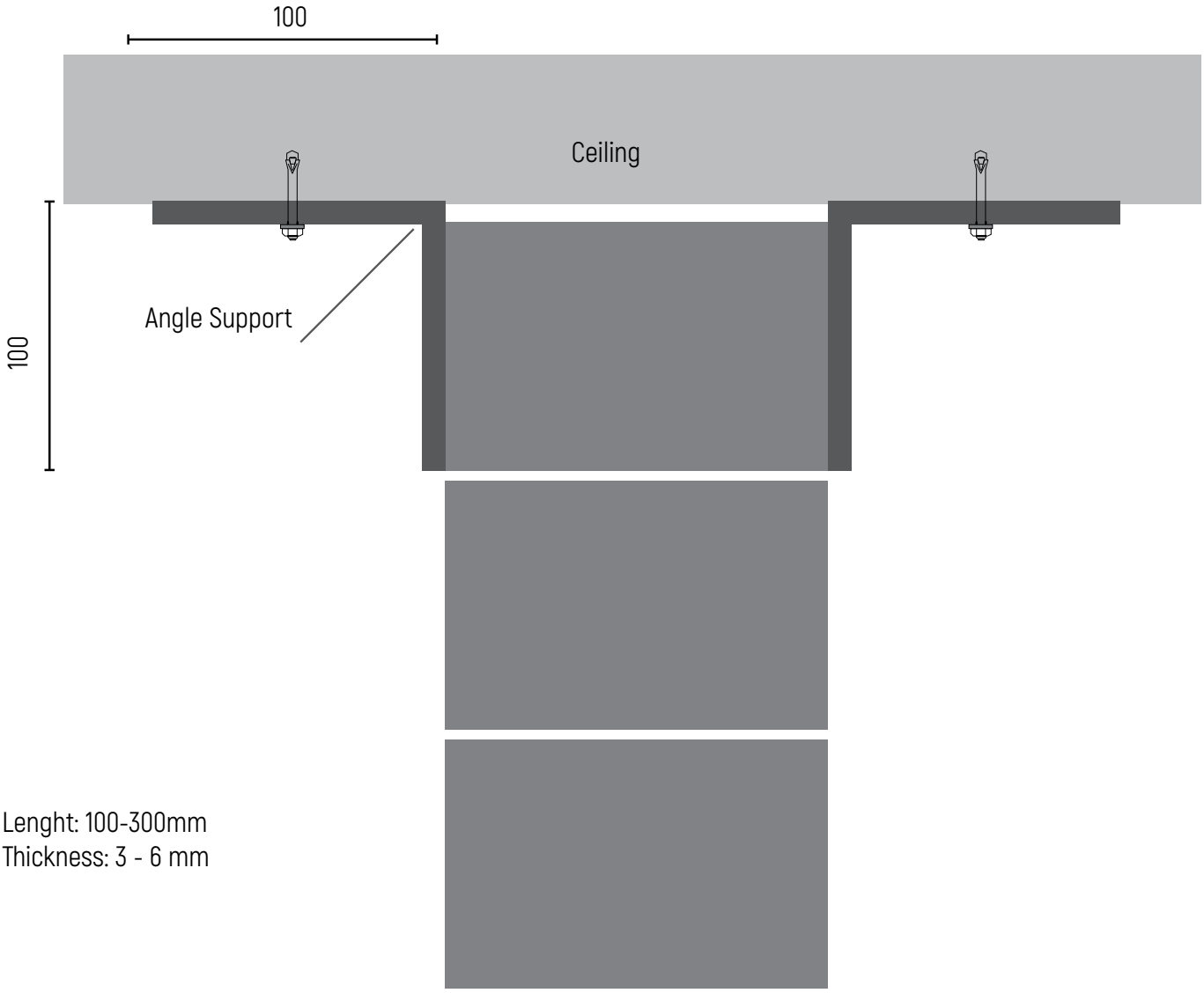

Lenght: 100-300mm
Thickness: 3 - 6 mm

Item Number	Description	Dimensions (mm)	Material
SOBTL_F_00083013	Block Tie	25x75x200x1.80	GI
SOBTL_F_00075869	Block Tie	30x75x250x2.00	GI
SOBTL_F_00047512	Block Tie	30x75x250x2.00	SS A4

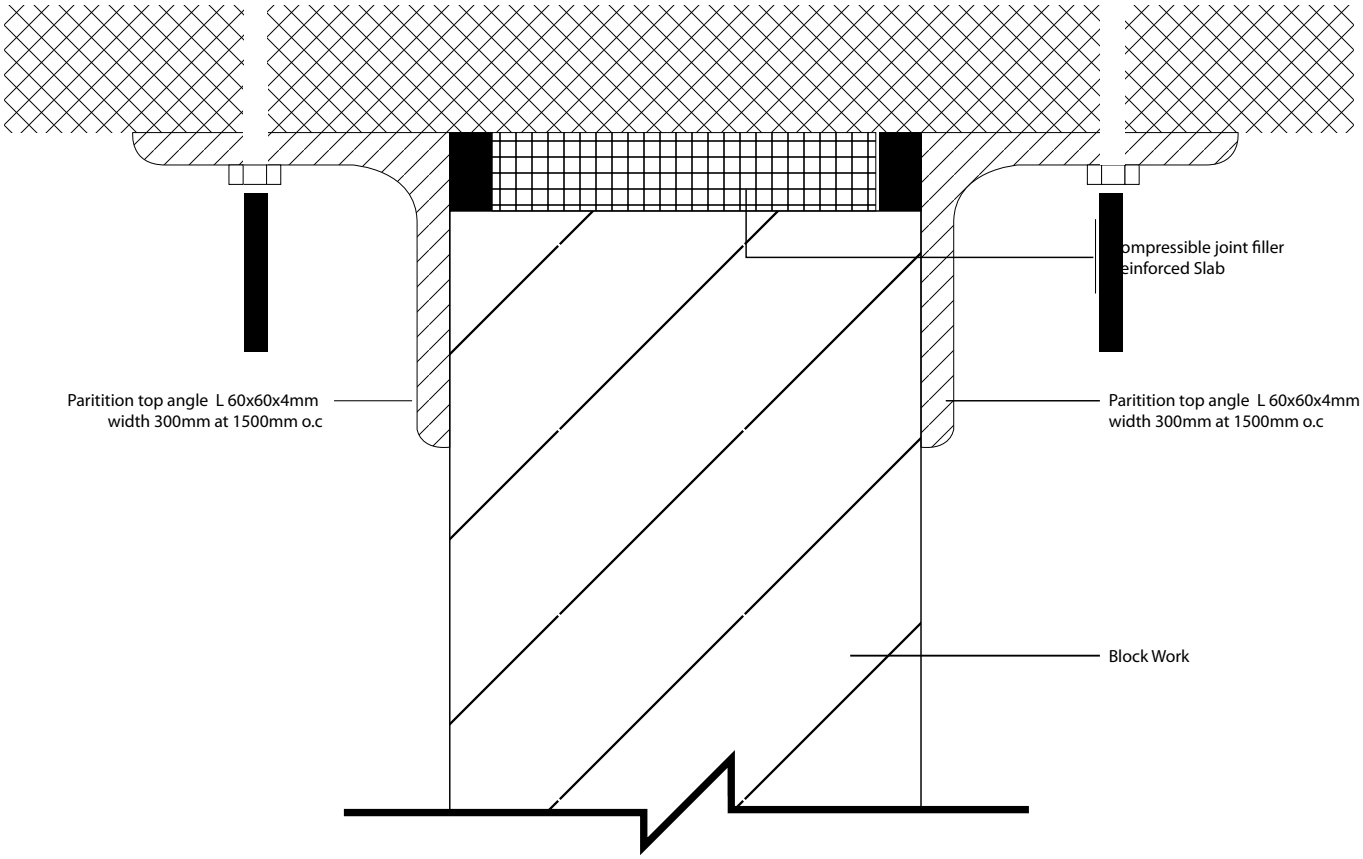

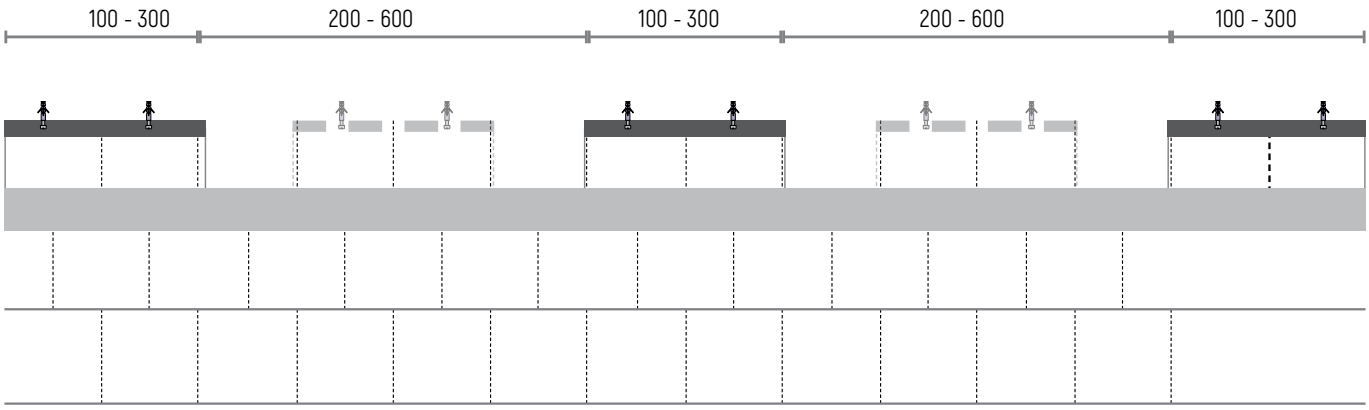

PARTITION TOP ROD ANCHORS (PTRA)

Partition Top Anchors have been developed to provide lateral shear resistance at the upper limit of masonry walls. They permit vertical deflection of the slab above, without transferring compressive loads to the masonry wall below. Partition Top Anchors are suitable for construction using steel.
Partition Top Anchors Tube with expansion filler is placed over rod anchor, which has been attached to concrete or steel by any of the methods illustrated.

Materials:

ASTM A 1008 (cold- rolled)
ASTM A1011 (Hot-rolled)

Finishes:

Hot Dip Galvanized –ASTM A153
ROD
Hot-Dip Galvanized ASTM A153
Plastic Tube : Manufactured from UPVC according to ASTM D542 and D696,D257

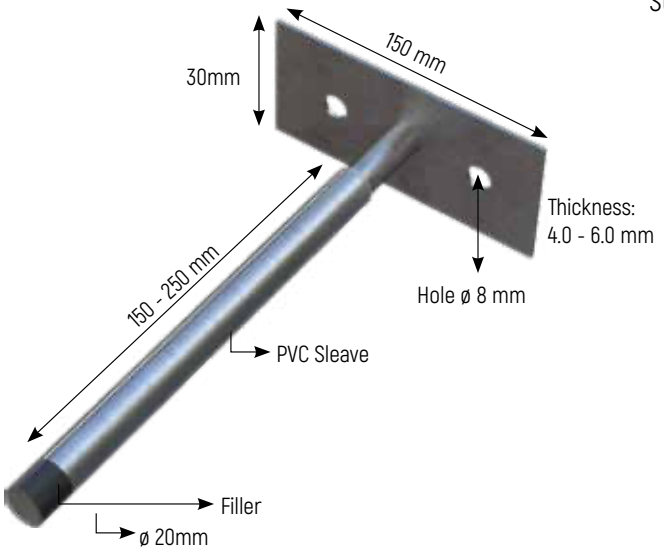

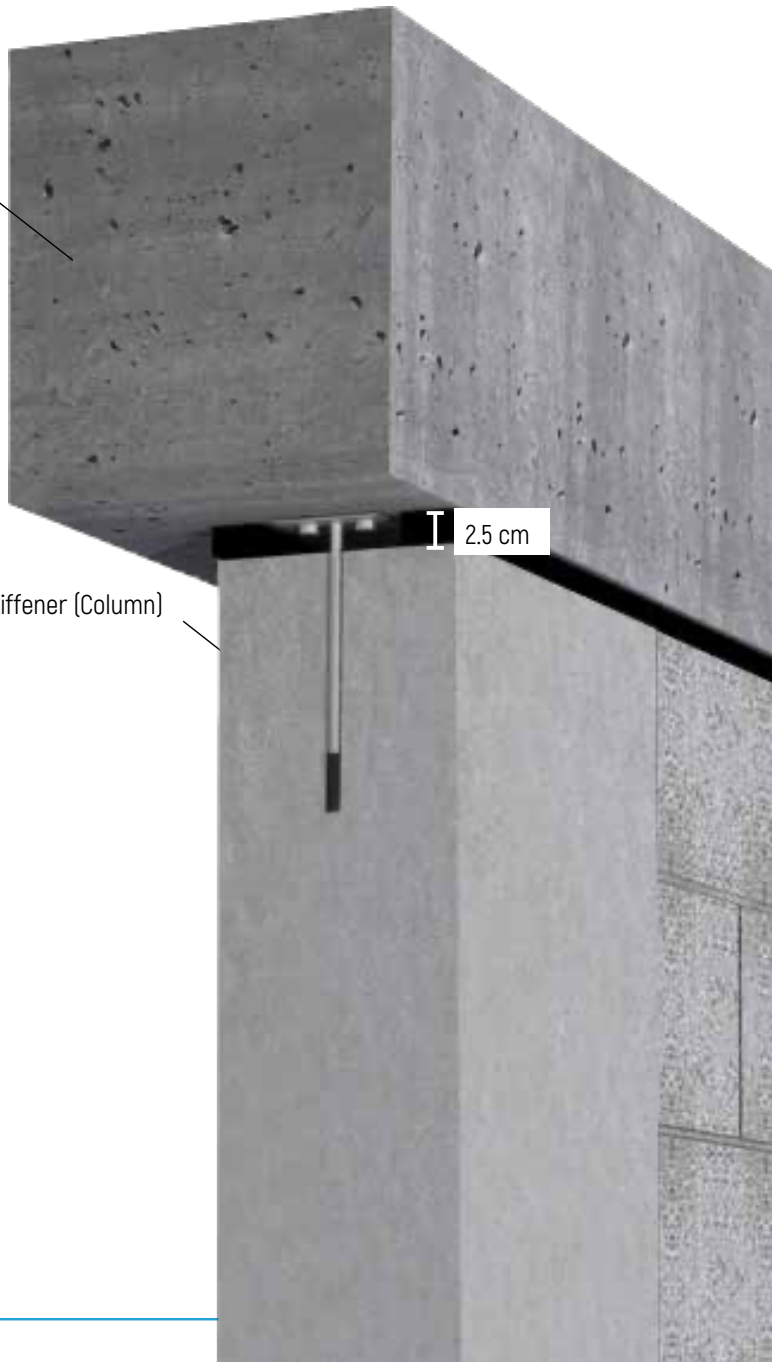

Partition Top Anchors have been developed to provide lateral shear resistance at the upper limit of masonry walls.

They permit vertical deflection of the slab above, without transferring compressive loads to the masonry wall below.

PTA are suitable for construction using steel or concrete.

PTA Tube with expansion filler is placed over rod anchor, which has been attached to concrete or steel by any of the methods illustrated.

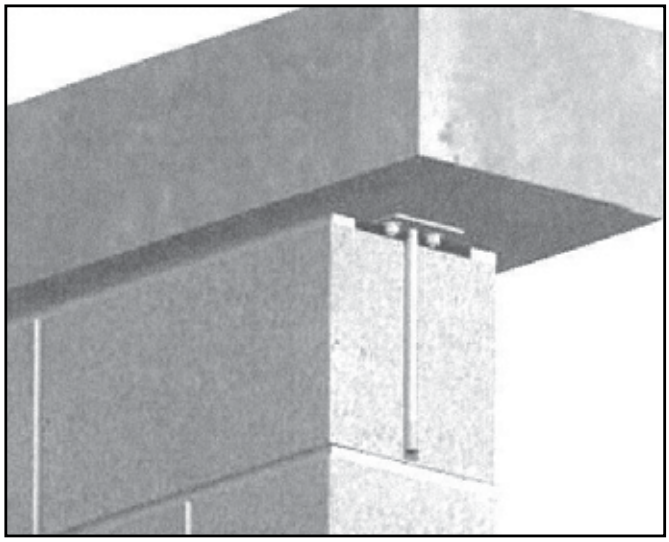

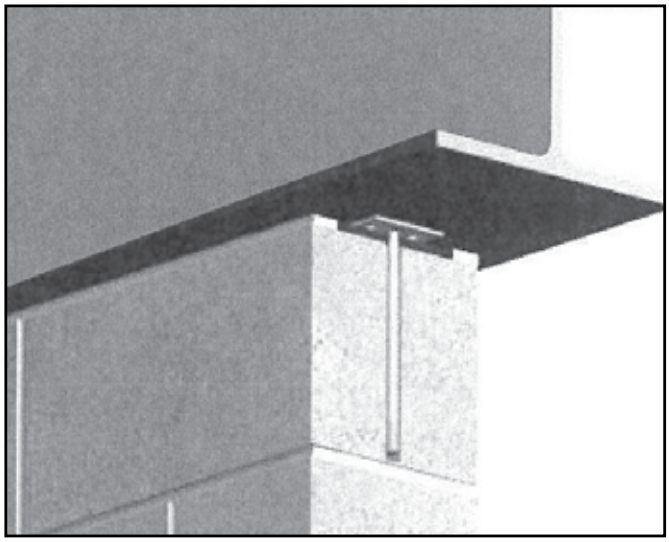

Finishes:

Sheet Metal:
Hot-Dip Galvanized - ASTM A153/A153M-B2 class B (sheet metal ties and anchors hot-dip galvanized after fabrication)

Sheet Metal (Stainless Steel):
ASTM A167 - AISI Type 304 Stainless Steel (sheet metal ties and anchors) (type 316 available on special order)

Rod:
Hot-Dip Galvanized - ASTM A153/A153M-B2 Stainless Steel Type 304 - ASTM A582/A582MPTA Tube: Manufactured from Clear Butyrate.

Dimensions:
- Rod 9.5 mm length 150mm Other diameters and gauges available
- Plate 50 x 75mm thickness 2.5mm

SURE - TIE FOR STEEL

Sure-Tie quickly and accurately pierces insulation and/or wallboard to abut steel/studs in brick veneer applications.

- One-piece design provides superior strength.
- 12-24 Self Driller.
- Accommodates 1/2" and 5/8" wall board and various thicknesses of insulation.
- Silver-Gray Climaseal® finish resulted in 0% red rust at 1000 hours exposure to ASTM B-117 salt spray testing.

Triangle Wire Tie

Seismic Wire Tie

Single Wire Tie

Seismic Anchor System

Stud Anchor

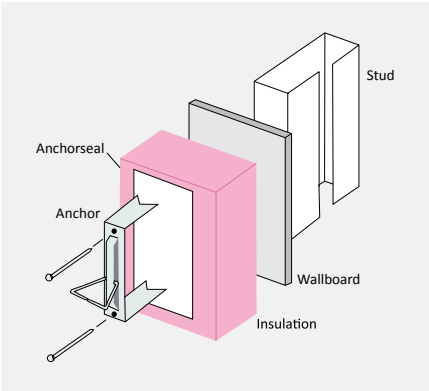

REBAR POSITIONERS

Rebar Postioners
RB Rebar Positioners are for positioning and stabilizing rebars installed into concrete block cores in reinforced masonry.

TWIN Rebar Postioners
TWIN Rebar Positioners are similar to the standard RB model but with double loops to hold 4 rebars.

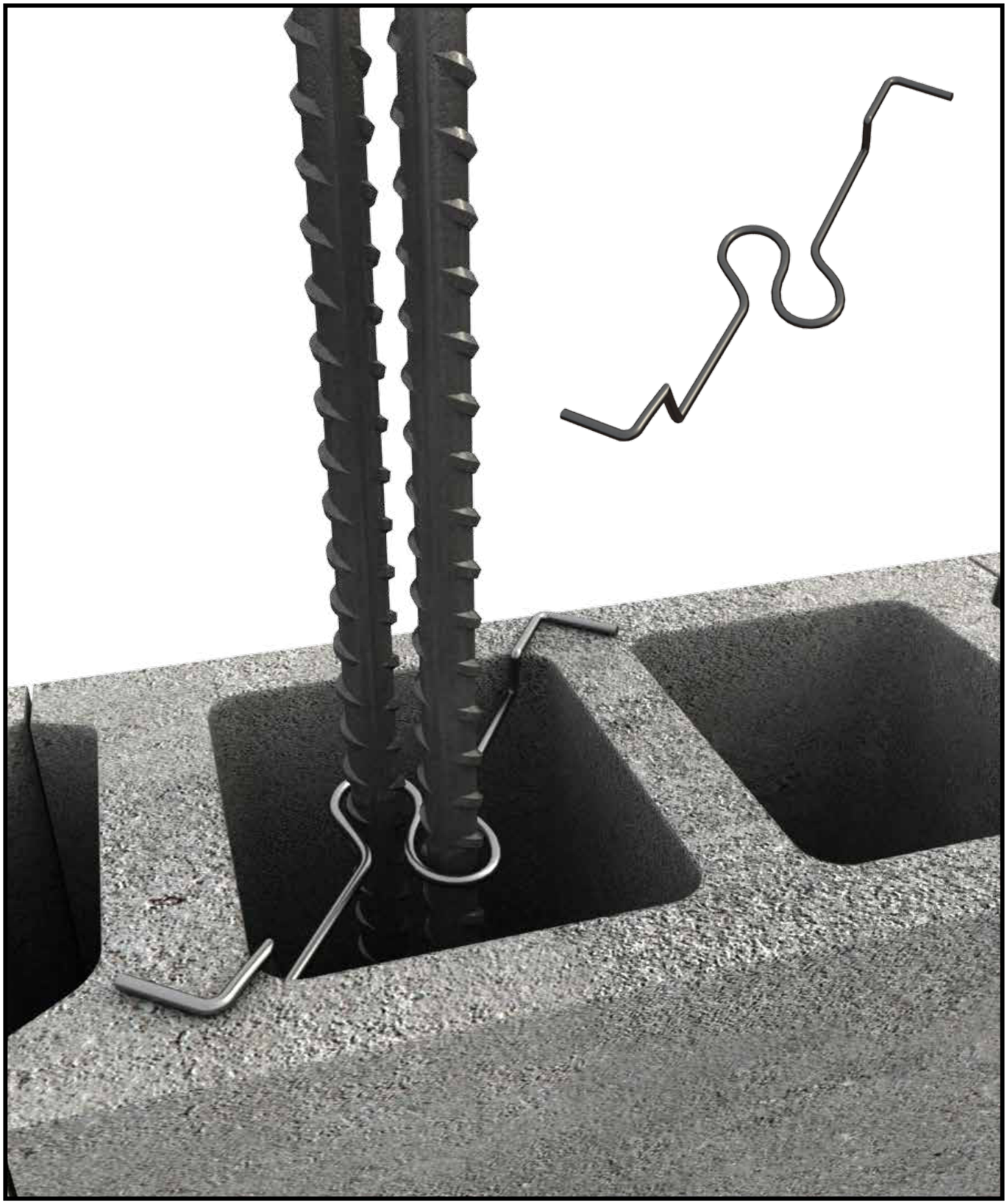

BLOCK WALL REINFORCEMENT

SFSP ladder and truss types are used for the reinforcement of brick and block masonry to give improved tensile strength to walls subjected to lateral loading e.g. wind and seismic.

SFSP block reinforcements reduces the risk of cracking either at stress concentration around opening. Calculations are provided by our design office in Stuttgart, Germany.

SPECIFICATIONS

SFSP reinforcement truss type are manufactured by resistance welding of ASTM A82 cold drawn steel wire deformed at predetermined centers conforming to BS 4483:2005.

DIMENSIONS

• Hot-dip galvanized.
- Main wire diameter = 4.0 mm 4.8 mm
- Rung and diagonal wire diameter = 4.0 mm 4.8 mm
- Rung wire centers = 400 mm

• Stainless steel AISI 304
- Main wire diameter = 4.0 mm 4.8 mm
- Rung and diagonal wire diameter = 4.0 mm 4.8 mm
- Round wire centers = 400 mm

The production of cold reduced steel wires complies to BS 4483:2005 and ASTM A951 / A951M - 11 Standard Specification for Steel Wire for Masonry Joint Reinforcement

a) Mechanical Properties
- Specified characteristic strength: 460 N/mm^2 (Mpa)
- Tensile strength min 510 N/mm^2 (Mpa)

b) Chemical composition of steel
- Carbon C max. 0,25 %, Sulphur S:max 0.06 %
- Carbon equivalent value Ceq: max 0.4 %, Ceq=C+Mn/6+ (Cr + V + Mo)/5+ (Cu x Ni)/15

SFSP Block ladder (Ladder type and Truss type) are continuous lengths of joint reinforcement that are embedded into the horizontal joints of masonry walls.

Block reinforcement offers the following benefits:
- Increases lateral flexural strength.
- Reduces cracking that can arise from thermal stresses.
- Bonds exterior and interior masonry withes together in composite or cavity walls.
- Bonds masonry at intersecting walls and corners.
- Increases performance of masonry wall under various stresses

LADDER TYPE

Item Number	Type	Dimensions (mm)	Length (mm)	Material
SOBLLS_F_00074797	T Shape	100x5.00/400	3000	GI
SOBLLS_F_00058459	T Shape	150x4.0/400	3000	GI
SOBLLS_F_00074801	T Shape	150x5.00/400	3000	GI
SOBLLS_F_00043736	T Shape	175x4.00/400	3000	GI
SOBLLS_F_00058463	T Shape	200x4.00/400	3000	GI
SOBLLS_F_00043764	T Shape	200x5.00/400	3000	GI
SOBLLS_F_00043744	T Shape	225x5.00/400	3000	GI
SOBLLS_F_00043748	T Shape	250x4.00/400	3000	GI
SOBLLS_F_00043768	Overlap	250x5.00/400	3000	GI
SOBLLS_F_00058451	T Shape	50x4.00/400	3000	GI
SOBLLS_F_00074793	T Shape	50x5.00/400	3000	GI
SOBLLS_F_00055973	T Shape	75x4.00/400	3000	GI
SOBLLS_F_00108923	Overlap	100x4.00/400	3000	Hot Dip Galvanized
SOBLLS_F_00057001	T Shape	100x4.00/400	3000	Hot Dip Galvanized
SOBLLS_F_00043604	Overlap	100x5.00/400	3000	Hot Dip Galvanized
SOBLLS_F_00074455	T Shape	100x4.00/400	3000	Hot Dip Galvanized
SOBLLS_F_00043528	Overlap	150x4.00/400	3000	Hot Dip Galvanized
SOBLLS_F_00063347	T Shape	150x4.00/400	3000	Hot Dip Galvanized
SOBLLS_F_00043608	Overlap	150x5.00/400	3000	Hot Dip Galvanized
SOBLLS_F_00074459	T Shape	150x5.00/400	3000	Hot Dip Galvanized
SOBLLS_F_00043564	Overlap	175x4.00/400	3000	Hot Dip Galvanized
SOBLLS_F_00040484	T Shape	175x4.00/400	3000	Hot Dip Galvanized
SOBLLS_F_00043576	Overlap	200x4.00/400	3000	Hot Dip Galvanized
SOBLLS_F_00065105	T Shape	200x4.00/400	3000	Hot Dip Galvanized
SOBLLS_F_00043612	Overlap	200x5.00/400	3000	Hot Dip Galvanized
SOBLLS_F_00074805	T Shape	200x5.00/400	3000	Hot Dip Galvanized
SOBLLS_F_00043572	Overlap	225x4.00/400	3000	Hot Dip Galvanized
SOBLLS_F_00040588	T Shape	225x4.00/400	3000	Hot Dip Galvanized
SOBLLS_F_00043588	Overlap	250x4.00/400	3000	Hot Dip Galvanized
SOBLLS_F_00065121	T Shape	250x4.00/400	3000	Hot Dip Galvanized
SOBLLS_F_00043624	Overlap	250x5.00/400	3000	Hot Dip Galvanized
SOBLLS_F_00040534	T Shape	250x5.00/400	3000	Hot Dip Galvanized
SOBLLS_F_00040564	Overlap	50x4.00/400	3000	Hot Dip Galvanized
SOBLLS_F_00056961	T Shape	50x4.00/400	3000	Hot Dip Galvanized
SOBLLS_F_00043592	Overlap	50x5.00/400	3000	Hot Dip Galvanized
SOBLLS_F_00065129	T Shape	50x5.00/400	3000	Hot Dip Galvanized
SOBLLS_F_00040622	Overlap	75x4.00/400	3000	Hot Dip Galvanized
SOBLLS_F_00022440	T Shape	75x4.00/400	3000	Hot Dip Galvanized
SOBLLS_F_00022428	T Shape	50x4.00/400	3000	Hot Dip Galvanized

Item Number	Type	Dimensions (mm)	Length (mm)	Material
SOBLLS_F_00058459	Overlap	100x4.0/400	3000	Hot Dip Galvanized
SOBLLS_F_00044082	Overlap	100x4.00/400	3000	SS A4
SOBLLS_F_00058431	Overlap	100x4.00/400	3000	SS A4
SOBLLS_F_00044088	T Shape	150x4.00/400	3000	SS A4
SOBLLS_F_00058435	T Shape	150x4.00/400	3000	SS A4
SOBLLS_F_00044094	Overlap	200x4.00/400	3000	SS A4
SOBLLS_F_00058447	T Shape	200x4.00/400	3000	SS A4
SOBLLS_F_00095665	T Shape	200x5.00/400	3000	SS A4
SOBLLS_F_00060407	T Shape	250x4.00/400	3000	SS A4
SOBLLS_F_00077079	Overlap	50x4.00/400	3000	SS A4
SOBLLS_F_00058427	T Shape	50x4.00/400	3000	SS A4
SOBLLS_F_00044042	T Shape	50x5.00/400	3000	SS A4
SOBLTS_F_00057435	T Shape	100x4.00/400	3000	SS A4
SOBLTS_F_00057487	T Shape	100x5.00/400	3000	SS A4
SOBLTS_F_00057447	T Shape	150x4.00/400	3000	SS A4
SOBLTS_F_00057459	T Shape	200x4.00/400	3000	SS A4
SOBLTS_F_00057519	T Shape	200x5.00/400	3000	SS A4
SOBLTS_F_00057471	T Shape	250x4.00/400	3000	SS A4
SOBLTS_F_00057523	T Shape	250x5.00/400	3000	SS A4
SOBLTS_F_00057423	T Shape	50x4.00/400	3000	SS A4
SOBLTS_F_00057477	T Shape	50x5.00/400	3000	SS A4
SOBLLS_F_00043972	Overlap	100x4.00/400	3000	SS A6
SOBLLS_F_00101077	T Shape	100x4.00/400	3000	SS A6
SOBLLS_F_00043978	Overlap	150x4.00/400	3000	SS A6
SOBLLS_F_00101083	T Shape	150x4.00/400	3000	SS A6
SOBLLS_F_00069993	Overlap	150x5.00/400	3000	SS A6
SOBLLS_F_00100027	Overlap	200x4.00/400	3000	SS A6
SOBLLS_F_00101099	T Shape	200x4.00/400	3000	SS A6
SOBLLS_F_00069999	Overlap	200x5.00/400	3000	SS A6
SOBLLS_F_00043960	Overlap	250x4.00/400	3000	SS A6
SOBLLS_F_00069975	Overlap	50x4.00/400	3000	SS A6
SOBLLS_F_00101071	T Shape	50x4.00/400	3000	SS A6
SOBLLS_F_00069963	Overlap	50x5.00/400	3000	SS A6

Accessories

Bends, Tee-branches, and intersections can be manufactured upon request. Corner units provide continuity y of reinforcement this can be cut and bent on site.

L - Junction Ladder

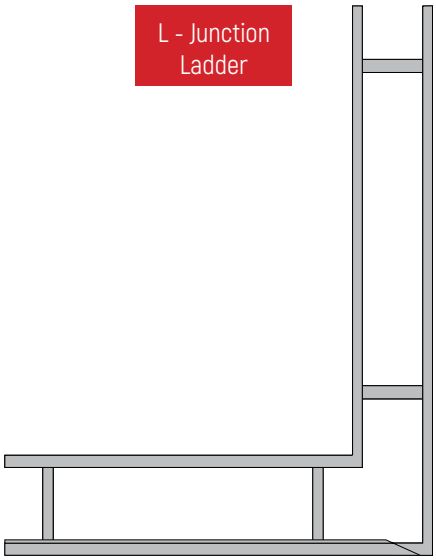

Item Number	Type	Dimensions (mm)	Material
SOBLLA_F_00007062	Overlap	100x4.00/400	GI
SOBLLA_F_00007260	Overlap	100x5.00/400	GI
SOBLLA_F_00007118	Overlap	150x400/400	GI
SOBLLA_F_00007284	Overlap	150x500/400	GI
SOBLLA_F_00007164	Overlap	200x4.00/400	GI
SOBLLA_F_00007308	Overlap	200x5.00/400	GI
SOBLLA_F_00007196	Overlap	250x4.00/400	GI
SOBLLA_F_00007588	Overlap	250x5.00/400	GI
SOBLLA_F_00007220	Overlap	50x4.00/400	GI
	Overlap	50x5.00/400	GI
SOBLLA_F_00010894	Overlap	100x4.00/400	Hot Dip Galvanized
SOBLLA_F_00082143	Overlap	100x5.00/400	Hot Dip Galvanized
SOBLLA_F_00010902	Overlap	150x400/400	Hot Dip Galvanized
SOBLLA_F_00082151	Overlap	150x500/400	Hot Dip Galvanized
SOBLLA_F_00010910	Overlap	200x4.00/400	Hot Dip Galvanized
SOBLLA_F_00082159	Overlap	200x5.00/400	Hot Dip Galvanized
SOBLLA_F_00010918	Overlap	250x4.00/400	Hot Dip Galvanized
SOBLLA_F_00082167	Overlap	250x5.00/400	Hot Dip Galvanized
SOBLLA_F_00010886	Overlap	50x4.00/400	Hot Dip Galvanized
SOBLLA_F_00082135	Overlap	50x5.00/400	Hot Dip Galvanized
SOBLLA_F_00050573	Overlap	100x4.00/400	SS A4
SOBLLA_F_00050603	Overlap	100x5.00/400	SS A4
SOBLLA_F_00050579	Overlap	150x400/400	SS A4
SOBLLA_F_00050609	Overlap	150x500/400	SS A4
SOBLLA_F_00050585	Overlap	200x4.00/400	SS A4
SOBLLA_F_00050615	Overlap	200x5.00/400	SS A4
SOBLLA_F_00050591	Overlap	250x4.00/400	SS A4
SOBLLA_F_00050621	Overlap	250x5.00/400	SS A4
SOBLLA_F_00050567	Overlap	50x4.00/400	SS A4
SOBLLA_F_00050597	Overlap	50x5.00/400	SS A4
SOBLLA_F_00050649	Overlap	100x4.00/400	SS A6
SOBLLA_F_00050679	Overlap	100x5.00/400	SS A6
SOBLLA_F_00050655	Overlap	150x400/400	SS A6
SOBLLA_F_00050685	Overlap	150x500/400	SS A6
SOBLLA_F_00050661	Overlap	200x4.00/400	SS A6
SOBLLA_F_00050691	Overlap	200x5.00/400	SS A6
SOBLLA_F_00050667	Overlap	250x4.00/400	SS A6
SOBLLA_F_00050697	– Overlap	250x5.00/400	SS A6
SOBLLA_F_00050643	Overlap	50x4.00/400	SS A6
SOBLLA_F_000 50673	Overlap	50x5.00/400	SS A6

Item Number	Type	Dimensions (mm)	Material
SOBLLA_F_00007968	Overlap	100x4.00/400	GI
SOBLLA_F_00008068	Overlap	100x5.00/400	GI
SOBLLA_F_00007996	Overlap	150x400/400	GI
SOBLLA_F_00008092	Overlap	150x500/400	GI
SOBLLA_F_00008020	Overlap	200x4.00/400	GI
SOBLLA_F_00008130	Overlap	200x5.00/400	GI
SOBLLA_F_00008036	Overlap	250x4.00/400	GI
SOBLLA_F_00008164	Overlap	250x5.00/400	GI
SOBLLA_F_00005464	Overlap	50x4.00/400	GI
SOBLLA_F_00008060	Overlap	50x5.00/400	GI
SOBLLA_F_00050711	Overlap	100x4.00/400	SS A4
SOBLLA_F_00050751	Overlap	100x5.00/400	SS A4
SOBLLA_F_00050719	Overlap	150x400/400	SS A4
SOBLLA_F_00050759	Overlap	150x500/400	SS A4
SOBLLA_F_00050727	Overlap	200x4.00/400	SS A4
SOBLLA_F_00050767	Overlap	200x5.00/400	SS A4
SOBLLA_F_00050735	Overlap	250x4.00/400	SS A4
SOBLLA_F_00050775	Overlap	250x5.00/400	SS A4
SOBLLA_F_00050703	Overlap	50x4.00/400	SS A4
SOBLLA_F_00050743	Overlap	50x5.00/400	SS A4
SOBLLA_F_00050791	Overlap	100x4.00/400	SS A6
SOBLLA_F_00050831	Overlap	100x5.00/400	SS A6
SOBLLA_F_00050799	Overlap	150x400/400	SS A6
SOBLLA_F_00050839	Overlap	150x500/400	SS A6
SOBLLA_F_00050807	Overlap	200x4.00/400	SS A6
SOBLLA_F_00050847	Overlap	200x5.00/400	SS A6
SOBLLA_F_00050815	Overlap	250x4.00/400	SS A6
SOBLLA_F_00050855	Overlap	250x5.00/400	SS A6
SOBLLA_F_00050783	Overlap	50x4.00/400	SS A6
SOBLLA_F_00050823	Overlap	50x5.00/400	SS A6
SOBLLA_F_00010982	Overlap	100x4.00/400	Hot Dip Galvanized
SOBLLA_F_00011022	Overlap	100x5.00/400	Hot Dip Galvanized
SOBLLA_F_00010990	Overlap	150x400/400	Hot Dip Galvanized
SOBLLA_F_00011030	Overlap	150x500/400	Hot Dip Galvanized
SOBLLA_F_00010998	Overlap	200x4.00/400	Hot Dip Galvanized
SOBLLA_F_00011038	Overlap	200x5.00/400	Hot Dip Galvanized
SOBLLA_F_00011006	Overlap	250x4.00/400	Hot Dip Galvanized
SOBLLA_F_00011046	Overlap	250x5.00/400	Hot Dip Galvanized
SOBLLA_F_00010974	Overlap	50x4.00/400	Hot Dip Galvanized
SOBLLA_F_00011014	Overlap	50x5.00/400	Hot Dip Galvanized

T - Junction Ladder

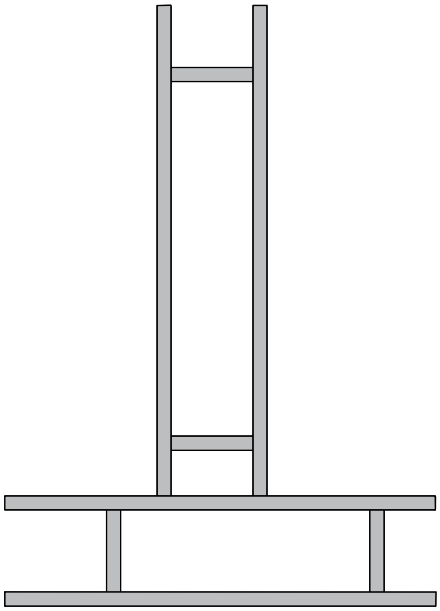

TRUSS TYPE

Item Number	Type	Dimensions (mm)	Length (mm)	Material
SOBLTS_F_00075203	T-Shape	100x4.00/400	3000	GI
SOBLTS_F_00012766	T-Shape	100x5.00/400	3000	GI
SOBLTS_F_00075207	T-Shape	150x4.00/400	3000	GI
SOBLTS_F_00012770	T-Shape	150x5.00/400	3000	GI
SOBLTS_F_00082987	T-Shape	200x4.00/400	3000	GI
SOBLTS_F_00012774	T-Shape	200x5.00/400	3000	GI
SOBLTS_F_00012758	T-Shape	250x4.00/400	3000	GI
SOBLTS_F_00012778	T-Shape	250x5.00/400	3000	GI
SOBLTS_F_00075199	T-Shape	50x4.00/400	3000	GI
SOBLTS_F_00012762	T-Shape	50x5.00/400	3000	GI
SOBLTS_F_00022456	T-Shape	100x4.00/400	3000	Hot Dip Galvanized
SOBLTS_F_00022476	T-Shape	100x5.00/400	3000	Hot Dip Galvanized
SOBLTS_F_00022460	T-Shape	150x400/400	3000	Hot Dip Galvanized
SOBLTS_F_00022480	T-Shape	150x500/400	3000	Hot Dip Galvanized
SOBLTS_F_00022464	T-Shape	200x4.00/400	3000	Hot Dip Galvanized
SOBLTS_F_00022484	T-Shape	200x5.00/400	3000	Hot Dip Galvanized
SOBLTS_F_00022468	T-Shape	250x4.00/400	3000	Hot Dip Galvanized
SOBLTS_F_00022488	T-Shape	250x5.00/400	3000	Hot Dip Galvanized
SOBLTS_F_00022472	T-Shape	50x5.00/400	3000	Hot Dip Galvanized
SOBLTS_F_00080145	T-Shape	150x400/400	3000	MS Hot Dip Galvanized
SOBLTS_F_00080149	T-Shape	200x4.00/400	3000	MS Hot Dip Galvanized
SOBLTS_F_00080153	T-Shape	250x4.00/400	3000	MS Hot Dip Galvanized
SOBLTS_F_00080137	T-Shape	50x4.00/400	3000	MS Hot Dip Galvanized
SOBLTS_F_00082175	T-Shape	75x4.00/400	3000	MS Hot Dip Galvanized
SOBLTS_F_00057275	Overlap	100x4.00/400	3000	SS A6
SOBLTS_F_00057399	T-Shape	100x5.00/400	3000	SS A6
SOBLTS_F_00057383	T-Shape	150x4.00/400	3000	SS A6
SOBLTS_F_00057403	T-Shape	150x5.00/400	3000	SS A6
SOBLTS_F_00057387	T-Shape	200x4.00/400	3000	SS A6
SOBLTS_F_00057407	T-Shape	200x5.00/400	3000	SS A6
SOBLTS_F_00057391	T-Shape	250x4.00/400	3000	SS A6
SOBLTS_F_00057411	T-Shape	250x5.00/400	3000	SS A6
SOBLTS_F_00057271	T-Shape	50x400/400	3000	SS A6

Accessories

Bends, Tee-branches, and intersections can be manufactured upon request.
Corner units provide continuity of reinforcement this can be cut and bent on site.

Item Number	Type	Dimensions (mm)	Material
SOBLTA_F_00075659	T-Shape	100x4.00/400	GI
SOBLTA_F_00075679	T-Shape	150x4.00/400	GI
SOBLTA_F_00075665	T-Shape	200x4.00/400	GI
SOBLTA_F_00075653	T-Shape	50x4.00/400	GI
SOBLTA_F_00085437	T-Shape	150x4.00/400	MS Hot Dip Galvanized
SOBLTA_F_00108909	T-Shape	50x4.00/400	MS Hot Dip Galvanized

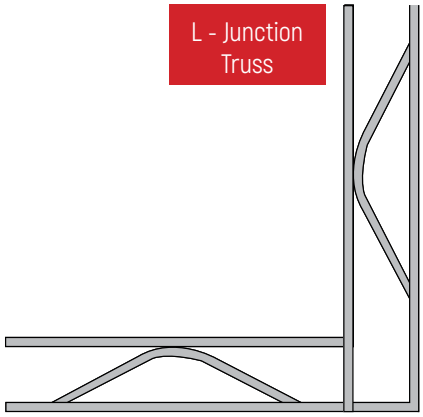

Item Number	Type	Dimensions (mm)	Material
SOBLTA_F_00011222	Overlap	100x4.00/400	Hot Dip Galvanized
SOBLTA_F_00011262	Overlap	100x5.00/400	Hot Dip Galvanized
SOBLTA_F_00011230	Overlap	150x4.00/400	Hot Dip Galvanized
SOBLTA_F_00011270	Overlap	150x5.00/400	Hot Dip Galvanized
SOBLTA_F_00011238	Overlap	200x4.00/400	Hot Dip Galvanized
SOBLTA_F_00011278	Overlap	200x5.00/400	Hot Dip Galvanized
SOBLTA_F_00011246	Overlap	250x4.00/400	Hot Dip Galvanized
SOBLTA_F_00011286	Overlap	250x5.00/400	Hot Dip Galvanized
SOBLTA_F_00011214	Overlap	50x4.00/400	Hot Dip Galvanized
SOBLTA_F_00011254	Overlap	50x5.00/400	Hot Dip Galvanized
SOBLTA_F_00069481	T-Shape	100x4.00/400	GI
SOBLTA_F_00069465	T-Shape	150x4.00/400	GI
SOBLTA_F_00012686	Overlap	150x5.00/400	GI
SOBLTA_F_00069497	T-Shape	200x4.00/400	GI

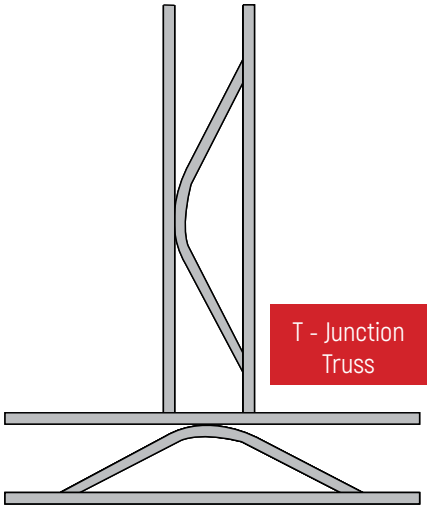

PULLOUT BOX

The GI Pullout Box is supplied in retainer boxes made from galvanized sheet steel, for the reliable transmission of shear forces. The GI Pullout Box, designed to ensure the exact distance between rods, in which the holes are made slightly bigger than the rod diameter. Material Used: Galvanized sheet, different zinc coatings. Gi Pullout Box Length: 1.2m, 2.44m, 3m (other length can be manufactured upon request.)
Gi Pullout Box Width: 100mm – 400mm (other widths, smaller or larger can be arranged.)
Hole Diameter: 10mm – 25mm (other punching required, can be done.) Material Thickness: 0.4mm – 1.5mm as standard (other thicknesses can be manufactured upon request) Covers: According to the requirements.

Item Number	Dimensions (mm)	Material
SCUC_F_00088339	498x34-34x0.90x1000	GI
SCUC_F_00084769	198x34-34x0.70x1000	GI
SCUC_F_00091761	198x34-34x0.80x1000	GI
SCUC_F_00102843	180x40x0.70x2400	GI
SCUC_F_00107875	220x40 x0.70x2400	GI
SCUC_F_00102829	280x40x0.70x2400	GI
SCUC_F_00102859	178x39x0.70x2400	GI
SCUC_F_00107887	218x39x0.70x2400	GI
SCUC_F_00107881	218x40x0.70x2400	GI
SCUC_F_00102849	278x39x0.70x2400	GI
GNA_F_00073505	250x35-35x0.80x1000	GI
GNA_F_00073501	250x35-35x0.80x1200	GI
GNA_F_00073497	260x35-35x0.80x1000	GI
SCUC_F_00073485	200x30-30x0.80x1200	GI
SCUC_F_00073479	200x30-30x0.80x1200	GI
SCUC_F_00073473	200x30-30x0.80x1200	GI
SCUC_F_00091265	200x35-35x0.70x1000	GI
SCUC_F_00062363	200x35-35x0.70x1200	GI
SCUC_F_00062363	200x35-35x0.70x1200	GI
SCUC_F_00093351	200x35-35x0.80x1000	GI

Item Number	Dimensions (mm)	Material
SCUC_F_00093473	200x35-35x0.80x1200	GI
SCUC_F_00065295	200x40-40x0.70x2400	GI
SCUC_F_00065289	215x40-40x0.70x2400	GI
SCUC_F_00062369	250x35-35x0.70x1200	GI
SCUC_F_00091271	250x35-35x0.80x1000	GI
SCUC_F_00093467	250x35-35x0.80x1200	GI
SCUC_F_00093345	260x35-35x0.80x1000	GI
SCUC_F_00093461	260x35-35x0.80x1200	GI
SCUC_F_00075467	280x35-35x0.70x1200	GI
SCUC_F_00110621	290x25-25x0.8x2000	GI
SCUC_F_00108479	290x35-35x0.9x1500	GI
SCUC_F_00108485	290x35-35x0.9x1600	GI
SCUC_F_00108491	290x35-35x0.9x1800	GI
SCUC_F_00108473	290x35-35x0.9x2100	GI
SCUC_F_00084717	300x35-35x0.70x1000	GI
SCUC_F_00062357	300x35-35x0.70x1200	GI
SCUC_F_00106347	300x35-35x0.80x1200	GI
SCUC_F_00084731	325x35-35x0.70x1000	GI
SCUC_F_00084737	350x35-35x0.70x1000	GI
SCUC_F_00084743	400x35-35x0.70x1000	GI
SCUC_F_00087829	450x35-35x0.70x1000	GI
SCUC_F_00088837	475x35-35x0.90x1000	GI
SCUC_F_00062351	75x35-35x0.70x2400	GI
SCUC_F_00084775	298x34-34x0.70	GI
SCUC_F_00084787	323x34-34x0.70x1000	GI
SCUC_F_00084805	348x34-34x0.70x1000	GI
SCUC_F_00084817	398x34-34x0.70x1000	GI
SCUC_F_00087835	448x34-34x0.70x1000	GI
SCUC_F_00073491	198x30-30x0.70x1200	GI
SCUC_F_00099377	198x34-34x0.70x1200	GI
SCUC_F_00108503	288x34-34x0.8x1500	GI
SCUC_F_00108509	288x34-34x0.8x1600	GI
SCUC_F_00108515	288x34-34x0.8x1800	GI
SCUC_F_00108497	288x34-34x0.8x2100	GI
SCUC_F_00088329	473x34-34x0.80x1000	GI

Designed by Multi-d - www.multid-ikk.com