ADNOC GAS OPERATIONS & MARKETING LLC

ADDENDUM TO AGES-SP-07-003 REQUIREMENTS FOR MATERIALS IN SEVERE SERVICE

EPCm CONTRACT NO.: 3000076501

ADNOC GAS PROJECT NO.: 30201-50150-LT-HE

LONG TERM - EXECUTE STAGE

PROJECT 5.0 (P5)

EPCm FOR HABSHAN DBN

0	ISSUED FOR CONSTRUCTION (IFC)	04-JUN-25	Dana M	Shashank S / Hashir N	Shailesh K
A	ISSUED FOR REVIEW (IFR)	20-MAY-25	Dana M	Shashank S / Hashir N	Shailesh K
REV.	DESCRIPTION	DATE	PREPARED	CHECKED	APPROVED
			wood.		

TABLE OF CONTENTS

1.0 INTRODUCTION 4
1.1 BACKGROUND 4
1.2 LONG TERM EPCM PROJECT OBJECTIVES 4
1.3 SCOPE BATTERY LIMIT 5
2.0 PURPOSE OF THIS DOCUMENT 5
3.0 DEFINITIONS 5
3.1 GENERAL DEFINITIONS 5
3.2 TECHNICAL DEFINITIONS 6
4.0 AMENDMENTS 8
4.1 AMENDMENTS TO SECTION 1 – GENERAL 8
4.2 AMENDMENTS TO SECTION A – GENERAL 10
4.3 AMENDMENTS TO SECTION B – TECHNICAL REQUIREMENTS 16
4.4 AMENDMENTS TO SECTION C – OTHER REQUIREMENTS 37
4.5 AMENDMENTS TO SECTION E – MATERIAL TESTING 37
4.6 AMENDMENTS TO APPENDIX A5 38
APPENDIX-01 TESTING AND INSPECTION REQUIREMENTS FOR CS PRODUCTS IN SEVERE SERVICE 39
APPENDIX-02 AGES-SP-07-003 40

LIST OF TABLES

Table 3-1: General Definitions 5
Table 3-2: Technical Definitions 6
Table 4-1: Abbreviations 9
Table 4-2: ADNOC Specifications 11
Table 4-3: Project Documents 11

HOLD LIST

PARAGRAPHS HOLD IN THIS ISSUE			
Hold No.	Section / Para No.	Page No.	Holds Description

1.0 INTRODUCTION

1.1 BACKGROUND

ADNOC aims to increase oil production to produce 5.0 MMBOPD by year-end 2027. Accordingly, associated gas production is anticipated to increase. Also, to meet the future oil and gas demand, non-associated gas developments are considered. Hence, the overall gas supply scenarios for major ADNOC Gas (hereafter referred to as COMPANY) assets i.e., Das Facilities, Bab and Habshan Complex (Habshan 0, 1, 2, 4, and 5), Asab and Bu Hasa, is anticipated to change depending on their feed sources, profiles including rates, compositions, and operating conditions. These changes will also subsequently impact the COMPANY downstream facilities, particularly, products handling and transferring facilities i.e., Sales Gas Network, NGL Pipeline Network, Ruwais Fractionation Trains (1, 2, 3, 4 and upcoming new Train 5 part of Bab Cap Gas SELECT Study), Sulphur Handling Facilities, and Condensate systems, etc.

COMPANY has carried out the Long Term DEFINE for the project with M/s Amec International Ltd. (M/s Wood) and subsequently decided to proceed with Long Term EXECUTE phase execution to ensure the readiness of COMPANY facilities to accommodate increased gas supply by December 2027.

Accordingly, COMPANY has awarded EPCm contract to M/s Amec International Ltd. (M/s Wood) to carry out the Long Term scope requirements. M/s Wood shall act as a single entity in the performance of the services and a single point of accountability to ADNOC Gas for the successful completion of Long Term EXECUTE phase.

1.2 LONG TERM EPCM PROJECT OBJECTIVES

The main objective of the Long Term EPCm is to execute the Habshan DBN Project to support ADNOC to achieve oil production target of 5.0 million BOPD so that Associated and Non-Associated Gas can be processed within the overall processing capacity of Habshan. The Long Term EPCm scope includes the following major areas as a minimum:

1. Habshan Complex (H0, H1 Train 1/2, H2, H4, H3 for SS-300 Tie-in)
2. Bab CDS and Bab NGL
3. Habshan 5
4. Pipeline scope activities including below new pipelines
   I. Bab CDS to Habshan Complex HP pipeline
   II. Bab CDS to Habshan Complex MP pipelines (2 no.s)
   III. Habshan 5 to Habshan 2 pipeline

The scope also includes adequacy checks for Ruwais NGL Fractionation Trains, MERAM,

Habshan Sulphur Granulation Plant, Sales gas, NGL, Condensate and interconnecting Pipeline network and Utilities for all impacted AG facilities.

The Long Term EPCM scope includes the following major activities as a minimum:

1. Detailed Engineering and design services
2. Procurement Services
3. Construction Management services
4. Pre-commissioning, Commissioning, Start-up services
5. Final documentation handover and Project close-out

Project also involves major interface activities with other on-going projects. Refer Project Interface management plan (Doc Num: PP-30201_50150_LT_HE-GG-000-50-00-006) for complete list of interface projects.

1.3 SCOPE BATTERY LIMIT

Refer Design Basis (Doc Num: BOD-30201_50150_LT_HE-GG-000-00-00-001) for the scope battery limits, Gas allocation and detailed Design basis.

2.0 PURPOSE OF THIS DOCUMENT

The subject document is an addendum to AGES-SP-07-003 Requirements for Materials in Severe Service. This addendum outlines the materials and fabrication requirements for severe service in gas processing facilities under the PROJECT scope.

This document shall be read in conjunction with the attached COMPANY specification AGES-SP-07-003 Rev. 1.

3.0 DEFINITIONS

3.1 GENERAL DEFINITIONS

For this document, the following general definitions are applicable.

Table 3-1: General Definitions

DEFINITION	DESCRIPTION
COMPANY	ADNOC GAS (AG) for whom the SERVICES are being performed by the EPCm CONTRACTOR.
EPCm CONTRACTOR	Amec International Limited – Abu Dhabi (WOOD) appointed by COMPANY to perform Engineering, Procurement, Construction management, Pre-Commissioning and Commissioning stage for Long Term Solution (under

DEFINITION	DESCRIPTION
	EXECUTE phase).
FACILITIES	Habshan Complex (H0, H1 Train 1/2, H2, H4, H3 for SS-300 Tie-in), Bab CDS, Bab NGL, Habshan 5 and interconnecting pipelines.
LICENSOR	Supplier of packaged units and responsible for the operating and design performance.
MANUFACTURER/ VENDOR/ SUPPLIER	The Party (parties) which manufactures and/or supplies material, equipment, technical documents or drawings and/or services to perform the duties specified by the COMPANY
PMC	Project Management Consultant appointed by COMPANY for the PROJECT
PMT	Project Management Team
PROJECT	PROJECT 5.0 (P5), Long Term EPCm for HABSHAN DBN
SERVICES	The scope of work to be completed during the EXECUTE stage (EPCm) of the PROJECT.
VENDOR	The party(s) which manufactures and/or supplies piping, equipment and services to perform the duties specified
SHALL	The use of the word “shall” indicate a mandatory requirement
SHOULD	The use of the word “should” indicate a strong recommendation to comply with the requirements of this document
EPCm CONSTRUCTION CONTRACTOR	Subcontractor appointed by EPCm CONTRACTOR to carry out Construction works at site for respective construction packages.
SUB-CONTRACTOR	The COMPANY approved party, which carries out services subcontracted by EPCm CONTRACTOR.

3.2 TECHNICAL DEFINITIONS

For this document, the following technical definitions are applicable.

Table 3-2: Technical Definitions

DEFINITION	DESCRIPTION
Acid Gas	A gas stream containing predominantly H_2S and/or CO_2 from an Acid Gas Removal Unit

DEFINITION	DESCRIPTION
Condensate	A hydrocarbon liquid stream containing Pentane+ compounds
Dehydrated Gas	A gas stream that has been dehydrated to remove water
Dry Gas	A gas stream containing no liquids at flowing conditions, but which may still contain water and hydrocarbons that will fall out if there is a change in flowing conditions.
Feed Gas - Associated Gas	A Gas stream that is produced from an oil well during the extraction of crude oil.
Feed Gas – Non-associated Gas	Hydrocarbon gas originating from gas reservoirs.
GMP 2023	Gas Master Plan 2023
Lean Gas	Lean nature of gas is defined based C2+ in the gas stream. If C2+ is less than 15% then stream is defined as Lean gas
Mixed Feed Gas Stream	Mixed associated and non-associated gas stream
NGL	A liquid stream with primarily C2, C3, C4 and some C5+ compounds.
Rich Gas	Rich gas is defined based C2+ in the gas stream. If C2+ is more than 15% it is considered rich gas
Sales Gas	Residue gas sent to the Sales gas network.
Sour Gas	A gas stream containing significant amounts of H_2S and/or CO_2.
Sustainable Profile (GMP 2023)	GMP 2023 High Supply Scenario – unconstrained oil production from GMP Guidelines Document from all associated gas fields
Sweet Gas	A gas stream in which the H_2S and CO_2 are not present in significant amounts.

DEFINITION	DESCRIPTION
Technical Profile	AON provided profile for technical case for associated gas.
Technical Optimized case	The ADNOC Gas facilities (Das, Asab-0/3, Buhasa, Ruwais, associated pipelines) will be sized to accommodate technical rates from associated gas fields. Habshan facilities will be sized to accommodate technical rate from all associated gas fields (Bab, Buhasa, NEB, Offshore) but not simultaneously. All inlet facilities / inlet compression shall be designed for technical rate.
Unconstrained Production Profile / High Supply Scenario	This shall be based on Upstream's OPEC Unconstrained Oil production case. This scenario corresponds to sustainable projects profiles

4.0 AMENDMENTS

The following amendments and additions shall apply to COMPANY AGES-SP-07-003 Requirements for Materials in Severe Service Specification (Rev.1).

Clauses not amended shall be considered applicable requirements of the specification.

Wherever amendments have been specified, these are noted with guide words such as "REPLACE", "ADD", "DELETE" or "MODIFY".

(Add) New paragraph or supplemental requirements and/or clarifications added to an existing paragraph.

(Replace) Replace the complete paragraph / section.

(Modify) Where the words in an existing clause have been modified but not a substitution that invalidates the paragraph.

(Delete) Where the clause no longer applies and is removed, either in full or in part.

4.1 AMENDMENTS TO SECTION 1 – GENERAL

4.1.1 Amendments to Section 1.1 – Introduction

- Replace 2nd sentence at 1st paragraph in Section 1.1 Introduction:

  General requirements for severe services are given before the Specification is split into specific requirements for upstream oil and gas processing facilities, and downstream refineries.

  With:

The requirements for severe services in general are given in Section 6, while the specific requirements applicable for the PROJECT are given in Section 7.

4.1.2 Amendments to Section 1.2 – Purpose

- Replace the whole paragraph in Section 1.2 Purpose:

  The purpose of this Specification is to provide an introduction and definition of the common severe services found with upstream and downstream oil and gas processes, provide insight to mitigation strategies for potential damage mechanisms, and to assist in writing material and fabrication specifications when selecting materials for said services. Requirements of this specification are intended to reduce the risk of cracking when exposed to these severe environments.

  With:

  The purpose of this Specification is to provide an introduction and definition of the applicable severe services found within the PROJECT, provide insight to mitigation strategies for potential damage mechanisms, and to assist in writing material and fabrication specifications when selecting materials for said services. Requirements of this Specification are intended to reduce the risk of cracking when exposed to these severe environments.

4.1.3 Amendments to Section 1.3 – Definitions and Abbreviations

- Replace the definition of “COMPANY”, “CONTRACTOR”, “MANUFACTURER” and “SUPPLIER” with definition specified in Table 3-1, Section 3 of this document.
- Add:

  Wherever “CONTRACTOR” is specified, it shall be read as “EPCm CONTRACTOR”.
- Delete following abbreviations in “Table 1-1 List of Abbreviations”:
  - ACSCC
  - FCCU
  - LSS
  - REAC
- Add following abbreviations (in “Table 4-1”) to “Table 1-1 List of Abbreviations” in Section 1.3.

Table 4-1: Abbreviations

Abbreviation	Description
ADNOC	Abu Dhabi National Oil Company
AG	ADNOC Gas
AGES	ADNOC Group Engineering Specification

Abbreviation	Description
BOD	Basis of Design
BOP	Balance of Plant
BOPD	Barrels of Oil per Day
EPC	Engineering, Procurement and Construction
GMP	Gas Master Plan
HSE	Health Safety and Environment
MMBOPD	Million Barrels of Oil per Day
MMSCFD	Metric Million Standard Cubic Feet per Day
NACT	Normalizing and Accelerated Cooling & Tempering
NGL	Natural Gas Liquids
PSR	Process Safety Requirement
SCC	Stress Corrosion Cracking

4.2 AMENDMENTS TO SECTION A – GENERAL

4.2.1 Amendments to Section 2.1 – International Code and Standards

- **AMERICAN PETROLEUM INSTITUTE (API)**

  Delete the following:

  - API RP 17B
  - API Spec 17J

  Add the following:

  - API RP 577 Welding Processes, Inspection, and Metallurgy
  - API RP 581 Risk-Based Inspection Methodology

- **AMERICAN SOCIETY OF MECHANICAL ENGINEERS**

  Add the following:

  - ASME BPVC Section II Materials Part B – Nonferrous Material Specifications
  - ASME BPVC Section II Materials Part C – Specifications for Welding Rods, Electrodes, and Filler Metals

4.2.2 Amendments to Section 2.2 – ADNOC Specifications

- Replace section title:

2.2 ADNOC Specifications

With:

2.2 ADNOC Specifications and Project References

- Replace the whole paragraph under Section 2.2 – ADNOC Specifications with following table:

Table 4-2: ADNOC Specifications

Sl. No.	Document Number	Document Title
1	AGES-GL-07-001	Material Selection Guidelines
2	AGES-SP-07-009	Galvanizing
3	AGES-SP-07-011	Preservation & Export Packing Specification
4	AGES-SP-13-001	Criticality Rating Specification
5	AGES-SP-13-002	Procurement Inspection and Certification Requirement in Projects
6	AGES-SP-13-003	Traceability of Shop & Field Piping Materials
7	AGES-GL-13-001	Contractors QA/QC Requirement
8	AGES-GL-13-002	Positive Material Identification of Equipment and Piping Guidelines

- Add the following table in Section 2.2:

Table 4-3: Project Documents

Sl. No.	Document Number	Document Title
1	30201_50150_LT_HE-ADD-SP-04-002	ADDENDUM TO AGES-SP-04-002 CONTROL VALVE SPECIFICATION
2	30201_50150_LT_HE-ADD-SP-04-005	ADDENDUM TO AGES-SP-04-005 EMERGENCY SHUTDOWN AND ON OFF VALVES SPECIFICATION

Sl. No.	Document Number	Document Title
3	30201_50150_LT_HE-ADD-PH-04-001	ADDENDUM TO AGES-PH-04-001 AUTOMATION AND INSTRUMENTATION DESIGN PHILOSOPHY
4	30201_50150_LT_HE-ADD-SP-05-001	ADDENDUM TO AGES-SP-05-001 CENTRIFUGAL PUMP (API 610) SPECIFICATION
5	30201_50150_LT_HE-ADD-SP-05-002	ADDENDUM TO AGES-SP-05-002 CENTRIFUGAL COMPRESSORS (API 617) SPECIFICATION
6	30201_50150_LT_HE-ADD-SP-06-002	ADDENDUM TO AGES-SP-06-002 PRESSURE VESSEL SPECIFICATION
7	30201_50150_LT_HE-ADD-SP-06-003	ADDENDUM TO AGES-SP-06-003 SHELL AND TUBE HEAT EXCHANGER SPECIFICATION
8	30201_50150_LT_HE-ADD-SP-06-004	ADDENDUM TO AGES-SP-06-004 AIR COOLED HEAT EXCHANGER SPECIFICATION
9	30201_50150_LT_HE-ADD-SP-06-005	ADDENDUM TO AGES-SP-06-005 ABOVE GROUND VERTICAL STORAGE TANKS SPECIFICATION
10	30201_50150_LT_HE-ADD-SP-06-009	ADDENDUM TO AGES-SP-06-009 WATER TUBE BOILERS SPECIFICATION
11	30201_50150_LT_HE-ADD-SP-06-011	ADDENDUM TO AGES-SP-06-011 VESSEL TRAYS AND INTERNALS SPECIFICATION
12	30201_50150_LT_HE-ADD-SP-06-012	ADDENDUM TO AGES-SP-06-012 PLATE AND FRAME HEAT EXCHANGERS SPECIFICATION
13	30201_50150_LT_HE-ADD-SP-07-	ADDENDUM TO AGES-SP-07-007

Sl. No.	Document Number	Document Title
	007	WELDING AND NON-DESTRUCTIVE EXAMINATION (NDE)
14	30201_50150_LT_HE-ADD-SP-09-001	ADDENDUM TO AGES-SP-09-001 PIPING BASIS OF DESIGN
15	30201_50150_LT_HE-ADD-SP-09-002	ADDENDUM TO AGES-SP-09-002 PIPING MATERIAL SPECIFICATION
16	30201_50150_LT_HE-ADD-SP-09-003	ADDENDUM TO AGES-SP-09-003 MANUAL PIPING AND PIPELINE VALVES
17	30201_50150_LT_HE-ADD-SP-09-005	ADDENDUM TO AGES-SP-09-005 SPECIFICATION FOR GASKETS AND FASTENERS
18	30201_50150_LT_HE-ADD-SP-09-007	ADDENDUM TO AGES-SP-09-007 SPECIFICATION OF SHOP AND FIELD FABRICATION OF PIPING
19	30201_50150_LT_HE-ADD-SP-09-009	ADDENDUM TO AGES-SP-09-009 PIPING TIE-INS AND HOT TAPPING
20	30201_50150_LT_HE-ADD-SP-09-013	ADDENDUM TO AGES-SP-09-013 SPECIFICATION FOR METALLIC PIPE, FITTINGS AND FLANGES
21	30201_50150_LT_HE-ADD-SP-09-014	ADDENDUM TO AGES-SP-09-014 FIBRE REINFORCED PLASTIC PIPING AND PIPELINE SYSTEM
22	30201_50150_LT_HE-ADD-SP-09-015	ADDENDUM TO AGES-SP-09-015 CLAD PIPES, FITTINGS AND FLANGES SPECIFICATION
23	30201_50150_LT_HE-ADD-SP-10-001	ADDENDUM TO AGES-SP-10-001 SPECIFICATION FOR LINEPIPE
24	30201_50150_LT_HE-ADD-SP-10-003	ADDENDUM TO AGES-SP-10-003 ONSHORE PIPELINES DESIGN AND

Sl. No.	Document Number	Document Title
		CONSTRUCTION SPECIFICATION
25	30201_50150_LT_HE-ADD-SP-10-006	ADDENDUM TO AGES-SP-10-006 CRA CLAD AND LINED STEEL PIPE (AMENDMENTS_SUPPLEMENTS TO API SPEC 5LD)
26	30201_50150_LT_HE-ADD-9510-004	ADDENDUM TO DGS-9510-004 FOR ONSITE, NON PIGGABLE PIPING MATERIALS
27	30201_50150_LT_HE-ADD-6300-004	ADDENDUM TO DGS-6300-004 PIPELINE WELDING SPECIFICATIONS

4.2.3 Amendments to Section 3 –Document Precedence

- Replace the whole paragraph in Section 3 –Document Precedence, with:

  In the event of any conflict between the applicable documents, the order of precedence shall be as follows:

  1. UAE Statutory Legislation and Environmental Regulations
  2. ADNOC HSE Regulations, HSE Standards and HSE Code of Practice
  3. Data Sheets
  4. Design Basis
  5. Project Specifications and addendum to AGES / DGS (Note-1)
  6. COMPANY Standards / Specifications and AGES / DGS (Note-1)
  7. International Codes and Standards

  Note-1 AGES Addendum/AGES shall be considered wherever AGES addendum/AGES is available. DGS Addendum/DGS shall be considered only in case AGES Addendum/AGES is not available.

  However, in case of conflict between the various specifications, standards and the requisition, most stringent requirements shall govern. EPCm CONTRACTOR/VENDOR shall refer any such conflict, and any other matter, which requires further interpretation, to the attention of COMPANY and COMPANY's interpretation shall be final. Resolution of any conflict shall be obtained from COMPANY in writing before proceeding.

  Any deviation from COMPANY standard accepted in the existing facility design shall not be considered as basis for this PROJECT design and any deviations shall be submitted to COMPANY for approval before proceeding.

4.2.4 Amendments to Section 4 – Specification Deviation / Concession Control

- Replace below 2nd paragraph in Section 4 – Specification Deviation / Concession Control:

  In the absence of a list of deviations, it will be assumed that the MANUFACTURER complies fully with this Specification.

  With:

  In the absence of a list of deviations, it will be assumed that EPCm CONTRACTOR / MANUFACTURER complies fully with this Specification. Any technical deviation to this specification and its Appendices shall be sought by EPCm CONTRACTOR / MANUFACTURER only through a CONCESSION REQUEST format. CONCESSION REQUEST requires COMPANY'S review and approval prior to the proposed technical changes being implemented. Technical changes implemented prior to COMPANY approval are subject to rejection.

4.3 AMENDMENTS TO SECTION B – TECHNICAL REQUIREMENTS

4.3.1 Amendments to Section 5.1 – General

- Replace below 1st sentence in Section 5.1 – General:

  Severe services, as defined later in this Specification, include cracking mechanisms applicable to both “upstream oil and gas production facilities” and “downstream oil refineries”.

- With:

  Severe services, as defined later in this Specification, include cracking mechanisms applicable to “upstream oil and gas production facilities” under the PROJECT.

4.3.2 Amendments to Section 5.1.1 – Classification

- Replace the whole paragraph below in Section 5.1.1 – Classification:

  The following process environments defined in this Specification shall be considered as severe service:

  1. Sour service / Wet H_2S service;
  2. Alkaline carbonate services;
  3. Amine services with any concentration;
  4. Caustic services with any concentration;
  5. Ammonium bisulphide NH4HS with concentration > 2 wt%.

  With:

  The following process environments shall be considered as severe service under the PROJECT:

  1. Sour service / Wet H2S service
  2. Amine services with any concentration
  3. Caustic services with any concentration
  4. Sulphuric acid with any concentration

4.3.3 Amendments to Section 5.6 – Severe Service Environment – Refinery Environments

- Delete the whole section and sub-section (including its enclosed paragraph) of Section 5.6 Severe Service Environment – Refinery Environment:

4.3.4 Amendments to Section 5.7.1 – Damage Mechanisms

- Replace below Table 5.1 and its notes:

Table 5.1 List of Damage Mechanisms

Severe Service Environment	Material				
	CS	Austenitic SS	Martensitic SS	DSS / SDSS	Nickel Alloy
Sour Service / Wet H_2S	HIC / SWC SOHIC SSC / SZC	CLSCC (Note 1)	HIC / SWC SOHIC SSC / SZC	CLSCC Note 1 SSC GHSC	SSC SCC (Note 5)
Amine / Carbonate	ASCC ACSCC	ASCC (Note 2) SSC GHSC	ASCC SSC GHSC	ASCC SSC GHSC	-
Caustic	CSCC	CSCC	CSCC	CSCC	CSCC (Note 3)
Ammonium Bisulphide	HIC / SWC SOHIC SSC / SZC	Note 4	HIC / SWC SOHIC SSC / SZC	SSC SCC	(Note 4)

With:

Table 5.1 List of Damage Mechanisms

Severe Service Environment	Material				
	CS	Austenitic SS	Martensitic SS	DSS / SDSS	Nickel Alloy
Sour Service / Wet H_2S	HIC / SWC SOHIC SSC / SZC	CLSCC (Note 1)	HIC / SWC SOHIC SSC / SZC	CLSCC (Note 1) SSC GHSC	SSC SCC (Note 2)
Amine	ASCC	ASCC (Note 3) SSC GHSC	ASCC SSC GHSC	ASCC SSC GHSC	-
Caustic	CSCC	CSCC	CSCC	CSCC	CSCC (Note 4)

Notes:

1. ASS and DSS / Super DSS (SDSS) is susceptible to CLSCC / SSC in sour service / wet H_2S environments dependent on the concentration level of chlorides as well as other variable limits. Further parameters are given in NACE MR0175 / ISO 15156-3.
2. Certain grades of nickel alloys are prone to SSC and SCC if elemental Sulphur is present along with H_2S. Refer to NACEMR0175 / ISO 15156-3 for material grades that are resistant to elemental sulphur in wet H_2S service.
3. ASS is prone to pitting corrosion in presence of heat stable amine salts above the temperature of 136 °C (dependent on the type of amine; typically, MDEA).

4. CSCC is applicable to nickel-based alloys only at temperatures above 300 °C.

4.3.5 Amendments to Section 5.7.3 – Downstream Refinery Environments- Damage Mechanisms

- Delete the whole Section 5.7.3 Downstream Refinery Environments - Damage Mechanisms (including its enclosed paragraph).

4.3.6 Amendments to Section 5.8.1 – Requirements for Materials in Severe Services

- Replace below point (a) in Section 5.8.1 Requirements for Materials in Severe Services:

  a. Section 6 covers general requirements applicable to sour service / wet H_2S service and applies for both upstream oil and gas production systems and downstream refinery environments.

  With:

  a. Section 6 covers requirements applicable to sour service / wet H_2S service for upstream oil and gas production systems in general.

- Delete below point (c) in Section 5.8.1 Requirements for Materials in Severe Services:

  c. Section 8 addresses the requirement applicable only to downstream refinery environment.

4.3.7 Amendments to Section 5.8.2 – Severe Service

- Delete the whole Section 5.8.2 Severe Service (including its enclosed paragraph).

4.3.8 Amendments to Section 6 – General Requirements for Sour Service / Wet H_2S Service

- Replace below 1st sentence in Section 6 – General Requirements for Sour Service / Wet H_2S Service:

  Requirement applicable to product forms, i.e. plates, pipes, forging etc., are discussed in following sections and shall be applicable to both upstream oil and gas production systems and downstream refinery environments.

  With:

  Requirement applicable to product forms, i.e. plates, pipes, forging etc., are discussed in following sections and shall apply to upstream oil and gas production systems under the PROJECT.

4.3.9 Amendments to Section 6.1.1 – General Requirements

- Replace point (g) below:

  g. The following formula shall be used to calculate the Carbon Equivalent (CE) (all values are wt%):

$$CE = \%C + \frac{\%Mn}{6} + \frac{\%Ni+\%Cu}{15} + \frac{\%Cr+\%Mo+\%V}{5}$$

With:

g. The following formula shall be used to calculate the Carbon Equivalent (CE) (all values are wt%):

$$CE = \%C + \frac{\%Mn}{6} + \frac{\%Ni+\%Cu}{15} + \frac{\%Cr+\%Mo+\%V}{5}$$

For steels with Nb + V > 0.015wt%, CE is defined as:

$$CE = \%C + \frac{\%Si + \%Mo}{2.5} + \frac{\%Mn+\%Cr}{5} + \frac{\%Cu}{10} + \frac{\%Ni}{18} + \frac{\%V}{5} + \frac{\%Nb}{2}$$

4.3.10 Amendments to Section 6.1.2.2 – Chemical Analysis

- Delete below Note 1 under Table 6.1 in section 6.1.2.2 Chemical Analysis:

  Note 1. For downstream refinery applications, S=0.010 is acceptable for “NOT” and “LOW” process severity categories.

4.3.11 Amendments to Section 6.1.2.3 – Plate Grades

- Add below under 2nd paragraph in section 6.1.2.3 Plate Grades:

  In case plates in normalized condition is not feasible to meet mechanical and toughness properties, Normalizing and Accelerated Cooling & Tempering (NACT) condition can be acceptable for plate with higher thickness > 60mm provided it meets below additional requirements:

  1. Tempering temperature shall be at least 15°C more than maximum PWHT temperature.
  2. HIC test shall be done with 1 Cycle simulated PWHT coupon.
  3. Welding procedures shall be qualified on project materials.
  4. Welding Procedures shall be qualified for (3 or 4 cycle as per equipment requirement and additional 1 cycle PWHT) shall be qualified on actual material used for equipment manufacturing with highest carbon equivalent & minimum and maximum thickness used fabrication of Vessels.
  5. Except PWHT, no other Heat treatment above 620◦C shall be permitted on NACT plates.
  6. Through thickness test also required as per ASTM A 770 with Z35% quality level.
  7. The maximum hardness for the plates will be limited to 227 HV10, and PQR will be qualified to meet hardness requirements.
  8. Fiber elongation shall not exceed 5%.
  9. Vessel Datasheets, GA drawings and project documents shall indicate material plate delivered heat treatment condition.

4.3.12 Amendments to Section 6.1.2.5 – HIC Requirement for Plates

- Replace the whole paragraph below in Section 6.1.2.5 – HIC Requirement for Plates:

  HIC requirements for plate materials are specific to upstream and downstream process requirements and can be found in Section 7.1.2.1 and 8.1.2.2.1, respectively.

  With:

  HIC requirements for plate materials specific to upstream oil and gas production systems can be found in Section 7.1.2.1.

4.3.13 Amendments to Section 6.1.3.2 – Seamless Pipe to ASTM Specifications

- Replace below Table 6.2 and its notes:

  Table 6.2 Element wt.% Maximum Chemistry Requirements for Process Piping

C	Mn	Si	S	P	Cr	Mo	Cu	Ni	V
0.23 (Note 1,2)	1.4	0.3	0.010	0.02	0.3	0.12	0.2	0.4	0.02

  With:

  Table 6.2 Element wt.% Maximum Chemistry Requirements for Process Piping

C	Mn	Si	S	P	Cr	Mo	Cu	Ni	V
0.18	1.4	0.3	0.010	0.02	0.3	0.12	0.2	0.4	0.02

  Notes:

  1. The Carbon Equivalent (CE) shall be a maximum of 0.43.
  2. Microalloying elements (Nb, V, Ti, B) shall not be deliberately added.

4.3.14 Amendments to Section 6.1.3.4 – Welded Pipe to ASTM Specifications

- Delete point (c) below under <u>Specifications and Grades</u>:

  c. For downstream applications, especially for large diameter pipe, following killed & fine grain grades maybe used, if prior approval from CONTRACTOR / COMPANY is obtained:

     i. ASTM A671 class 32 gr CC60 or CC65;

     ii. ASTM A672 class 32 gr C 55, C60 or C65.

- Replace below sentence under <u>HIC Testing of Pipe:</u>

  HIC requirements for welded pipe are specific to upstream and downstream process requirements and can be found in Section 7.1.3.1 and 8.1.2.3.1, respectively.

  With:

  HIC requirements for plate materials specific to upstream oil and gas production systems

can be found in Section 7.1.2.1.

- Replace below the last sentence under Maximum Hardness:

  Hardness requirement for upstream and downstream refinery application shall be as per NACE MR0175 / ISO 15156, and NACE MR0103 / ISO 17945 / NACE SP0472 as applicable.

  With:

  Hardness requirement for upstream application shall be as per NACE MR0175 / ISO 15156.

- Replace below Notes 1 Table 6.3 under Manufacturing Procedure Qualification:

  Notes:

  1. Hardness requirement for upstream and downstream refinery application shall be as per NACE MR0175 / ISO 15156, and NACE MR0103 / ISO 17945 / NACE SP0472 as applicable.

  With:

  Note:

  1. Hardness requirement for upstream application shall be as per NACE MR0175 / ISO 15156.

4.3.15 Amendments to Section 6.1.3.5 – Welded Pipe to API 5L for Process Piping

- Replace below sentence under Hardness:

  The maximum hardness requirement of parent pipe, seam weld, or HAZ is specific to the process and can be found for upstream and downstream in Section 7 and section 8 respectively.

  With:

  The maximum hardness requirement of parent pipe, seam weld, or HAZ is specific to the process and can be found in Section 7.

4.3.16 Amendments to Section 6.1.4.1 – Seamless Pipe to API 5L for Transmission Pipeline

- Replace below sentence in Section 6.1.4.1 Seamless Pipe to API 5L for Transmission Pipeline:

  Seamless linepipe shall confirm to AGES-SP-10-001 and API 5L PSL 2 + Annex H. In addition to the requirements of AGES-SP-10-001: the maximum sizing ratio in cold sizing shall not exceed 0.012 for sour service / wet H_2S service pipe.

  With:

  Seamless linepipe shall confirm to Annex H (PSL2) of Addendum to AGES-SP-10-001 Specification for Linepipe (Doc. No. 30201_50150_LT_HE-ADD-SP-10-001) and as

supplemented in this Specification. In addition, the maximum sizing ratio in cold sizing shall not exceed 0.012 for sour service / wet H_2S service pipe.

4.3.17 Amendments to Section 6.1.4.2 – SAW Pipe to API 5L for Transmission Pipeline

- Replace below 1st sentence in Section 6.1.4.2 SAW Pipe to API 5L for Transmission Pipeline:

  Linepipe shall comply with AGES-SP-10-001 as supplemented by this Specification. The maximum strength grade shall be X70 / L485.

  With:

  Linepipe shall comply with Addendum to AGES-SP-10-001 Specification for Linepipe (Doc. No. 30201_50150_LT_HE-ADD-SP-10-001) and as supplemented by this Specification. The maximum strength grade shall be X65 / L450.

- Replace below sentence under Non-destructive Examination:

  NDE shall be as per Annex H and Annex K of API 5L.

  With:

  NDE shall be as per Annex H and Annex K of Addendum to AGES-SP-10-001 Specification for Linepipe (Doc. No. 30201_50150_LT_HE-ADD-SP-10-001).

- Replace below sentence under Manufacturing Procedure Qualification:

  The MPQ test regime shall be identical to “first-day production” tests in AGES-SP-10-001.

  With:

  The MPQ test regime shall be identical to “first-day production” tests in Addendum to AGES-SP-10-001 Specification for Linepipe (Doc. No. 30201_50150_LT_HE-ADD-SP-10-001).

4.3.18 Amendments to Section 6.1.6 – Castings

- Replace below sentence under Hardness:

  See Sections 7.1.4 and 8.1.2.5 for specific requirements for upstream and downstream, respectively.

  With:

  See Sections 7.1.4 for specific hardness requirements for upstream facilities.

4.3.19 Amendments to Section 6.1.8.2 – Forming

- Replace below sentence in Section 6.1.8.2 – Forming:

  Forming requirements can be found in the specific sections for upstream and downstream, 7.1.5.1 and 8.1.2.7, respectively.

With:

Forming requirements can be found in the specific section 7.1.5.1 for upstream facilities.

4.3.20 Amendments to Section 6.1.8.4 – Welding of Vessels and Piping Systems

- Replace below the last sentence in Section 6.1.8.4 – Welding of Vessels and Piping Systems:

  The requirements of COMPANY welding specifications and project specification will be applicable in addition to the requirement of this Section.

  With:

  The requirements of Addendum to AGES-SP-07-007 Welding & Non Destructive Examination (NDE) Specification (Doc No. 30201_50150_LT_HE-ADD-SP-07-007) will be applicable in addition to the requirement of this Section.

4.3.21 Amendments to Section 6.1.8.4.2 – Welding Procedure Qualification Record (WPQR)

- Replace below 2nd and 3rd paragraph under <u>Macro Examinations and Hardness Survey</u>:

  Following satisfactory macro examination, a Vickers hardness survey using a 10 Kg load (HV10) shall be made on the macro specimens. The general procedure shall be in accordance with ASTM E384 and NACE SP0472 for downstream and NACEMR0175 / ISO15156-2 for upstream applications.

  APPENDIX A4 of this Specification shows suitable hardness survey layouts for typical weld designs. Survey layouts for weld repair qualifications and other weld geometries shall follow the same principles according to NACE MR0103 / ISO 17945 and NACE MR0175 / ISO 15156-2 as applicable.

  With:

  Following satisfactory macro examination, a Vickers hardness survey using a 10 Kg load (HV10) shall be made on the macro specimens. The general procedure shall be in accordance with ASTM E384 and NACEMR0175 / ISO15156-2 for upstream applications.

  APPENDIX A4 of this Specification shows suitable hardness survey layouts for typical weld designs. Survey layouts for weld repair qualifications and other weld geometries shall follow the same principles according to NACE MR0175 / ISO 15156-2.

- Replace below sentence under <u>Maximum Hardness</u>:

  See Sections 7.1.5.2 and 8.1.2.8 for specific requirements for upstream and downstream, respectively.

  With:

  See Sections 7.1.5.2 for specific requirements for upstream facilities.

4.3.22 Amendments to Section 6.1.8.4.4 – Post Weld Heat Treatment

- Replace below last sentence in Section 6.1.8.4.4 – Post Weld Heat Treatment:

  PWHT requirement specific to upstream and downstream segments are covered in Section 7.1.5.3 and Section 8.1.2.10 respectively.

  With:

  PWHT requirement specific to upstream facilities are covered in Section 7.1.5.3.

4.3.23 Amendments to Section 6.1.8.4.6 – Production Weld Testing

- Replace below 1st sentence in Section 6.1.8.4.6 – Production Weld Testing:

  Production weld hardness testing is required for all weld types in sour service / wet H_2S service, no exemptions are permitted (specifically, the exempt cases in NACE SP0472 shall be tested).

  With:

  Production weld hardness testing is required for all weld types in sour service / wet H_2S service, no exemptions are permitted.

4.3.24 Amendments to Section 6.1.8.4.7 – Non-Destructive Examination

- Replace below last sentence at the last paragraph in Section 6.1.8.4.7 – Non-Destructive Examination:

  The acceptance criteria and aspects of NDE for piping and vessels shall be in accordance with COMPANY welding & NDE specification or project Specification as applicable.

  With:

  The acceptance criteria and aspects of NDE for piping and vessels shall be in accordance with Addendum to AGES-SP-07-007 Welding & Non Destructive Examination (NDE) Specification (Doc No. 30201_50150_LT_HE-ADD-SP-07-007).

4.3.25 Amendments to Section 6.1.8.5 – Welding of Transmission Pipelines

- Replace below sentence in Section 6.1.8.5 – Welding of Transmission Pipelines:

  Pipeline welding shall be in accordance with COMPANY welding specification and the additional requirements of this Specification. PWHT requirement shall be as per applicable code such as ASME B31.4 or ASME B31.8.

  With:

  Pipeline fabrication (field / girth) welding shall be in accordance with Addendum to DGS-6300-004 Pipeline Welding (Doc. No. 30201_50150_LT_HE-ADD-6300-004) and the additional requirements of this Specification. PWHT requirement shall be as per applicable code such as ASME B31.4 or ASME B31.8.

4.3.26 Amendments to Section 6.2.1 – General

- Replace the whole paragraph below in Section 6.2.1 – General:

  The manufacture, welding and the properties of Stainless Steel (SS) and Corrosion Resistant Alloys (CRAs) shall comply with the requirements of NACE MR0175 / ISO 15156-3 or NACE MR0103 / ISO 17945 (including all heat treatments and hardness limits) as applicable, with any modifications and additional requirements in this Specification. Specific requirements for upstream and downstream services are given in Sections 7.2 and 8.2, respectively.

  With:

  The manufacture, welding and the properties of Stainless Steel (SS) and Corrosion Resistant Alloys (CRAs) shall comply with the requirements of NACE MR0175 / ISO 15156-3 (including all heat treatments and hardness limits), with any modifications and additional requirements in this Specification. Specific CRA requirements for severe service in upstream facilities are given in Sections 7.2.

4.3.27 Amendments to Section 6.2.3 – Martensitic Stainless Steel

- Replace below sentence in Section 6.2.3 – Martensitic Stainless Steel:

  Internal, non-pressure containing compressor components not subject to significant tensile loads can be selected in accordance with NACE MR0175 / ISO 15156-3 or NACE MR0103 / ISO 17945 as applicable.

  With:

  Internal, non-pressure containing compressor components not subject to significant tensile loads can be selected in accordance with NACE MR0175 / ISO 15156-3.

4.3.28 Amendments to Section 6.2.3.1 – Precipitation Hardened Stainless Steel

- Replace below sentence in Section 6.2.3 – Precipitation Hardened Stainless Steel:

  Usage for other internal components shall be in accordance NACE MR0175 / ISO 15156-3 or NACE MR0103 / ISO 17945 as applicable and the requirements regarding processing, heat treatment regime, metallurgical condition and properties shall be complied with.

  With:

  Usage for other internal components shall be in accordance NACE MR0175 / ISO 15156-3 and the requirements regarding processing, heat treatment regime, metallurgical condition and properties shall be met.

4.3.29 Amendments to Section 6.2.5 – Metallic Claddings

- Replace below last sentence at the 1st paragraph in Section 6.2.5 – Metallic Claddings:

  For weld-overlays in pressure equipment, the requirements of project welding and NDE

specifications shall apply.

With:

For weld-overlays in pressure equipment and cladded pipe fabrication, the requirements of Addendum to AGES-SP-07-007 Welding & Non Destructive Examination (NDE) Specification (Doc No. 30201_50150_LT_HE-ADD-SP-07-007) shall apply.

- Add below paragraph under Section 6.2.5 – Metallic Claddings:

  For manufacturing of cladded linepipe, valves, fittings and flanges, the requirement shall refer to Addendum to AGES-SP-09-015 Clad Pipes, Fittings and Flanges Specification (Doc. No. 30201_50150_LT_HE-ADD-SP-09-015).

  For manufacturing of cladded linepipe, the requirement shall refer to Addendum to AGES-SP-10-006 CRA Clad and Lined Steel Pipe (Amendments / Supplements to API SPEC 5LD) (Doc. No. 30201_50150_LT_HE-ADD-SP-10-006).

  For girth weld / field welding of cladded linepipe, the requirements of Addendum to DGS-6300-004 Pipeline Welding (Doc. No. 30201_50150_LT_HE-ADD-6300-004) shall apply.

4.3.30 Amendments to Section 6.2.6 – Hard-facing

- Replace below sentence in Section 6.2.5 – Hard-facing:

  Hard-facings shall be used in accordance with NACE MR0175 / ISO 15156-3 or NACE MR0103 / ISO 17945 as applicable.

  With:

  Hard-facings shall be in accordance with NACE MR0175 / ISO 15156-3.

4.3.31 Amendments to Section 6.2.7.1 – General

- Replace 2nd paragraph below in Section 6.2.7.1 –General:

  The requirements regarding welding procedures, welding qualification, testing and weld properties shall be applicable in accordance with NACE MR0175 / ISO 15156-3 or NACE MR0103 / ISO 17945 as applicable, in addition to the requirements of the COMPANY Welding Specification that applies for the equipment or piping.

  With:

  The requirements regarding welding procedures, welding qualification, testing and weld properties shall be in accordance with NACE MR0175 / ISO 15156-3, in addition to the requirements of the Addendum to AGES-SP-07-007 Welding & Non Destructive Examination (NDE) Specification (Doc No. 30201_50150_LT_HE-ADD-SP-07-007) that applies for the equipment or piping.

4.3.32 Amendments to Section 6.2.7.2 – Forming

- Replace below last sentence in Section 6.2.7.2 – Forming:

This requirement does not apply to materials which are specifically permitted in the cold-worked condition by NACE MR0175 / ISO 15156-3 or NACE MR0103 / ISO 17945 as applicable.

With:

This requirement does not apply to materials which are specifically permitted in the cold-worked condition by NACE MR0175 / ISO 15156-3.

4.3.33 Amendments to Section 6.2.7.3.1 – General

- Replace 2nd sentence in Section 6.2.7.3.1 – General:

  The requirements of COMPANY welding specification and project welding and NDE specifications in addition to the requirement of this Section shall be applicable.

  With:

  The requirements of Addendum to AGES-SP-07-007 Welding & Non Destructive Examination (NDE) Specification (Doc No. 30201_50150_LT_HE-ADD-SP-07-007) in addition to the requirement of this Section shall be applicable.

4.3.34 Amendments to Section 6.2.7.3.2 – Martensitic Stainless Steel

- Replace the last sentence at 2nd paragraph in Section 6.2.7.3.2 – Martensitic Stainless Steel:

  Repair weld procedures and heat-treatment shall be qualified in accordance with NACE MR0175 / ISO 15156-3 or NACE MR0103 / ISO 17945 as applicable.

  With:

  Repair weld procedures and heat-treatment shall be qualified in accordance with NACE MR0175 / ISO 15156-3.

4.3.35 Amendments to Section 6.2.7.3.3 – Acceptable Welding Process

- Replace below sentence under Section 6.2.7.3.3 –Acceptable Welding Process:

  Pressure retaining welds and attachments to the pressure boundary components shall be made in accordance with COMPANY welding specification and project welding and NDE specifications.

  With:

  Pressure retaining welds and attachments to the pressure boundary components shall be made in accordance with Addendum to AGES-SP-07-007 Welding & Non Destructive Examination (NDE) Specification (Doc No. 30201_50150_LT_HE-ADD-SP-07-007).

4.3.36 Amendments to Section 6.2.7.3.4 – Welding Procedure Qualification

- Replace below the 1st sentence under <u>General Requirements</u>:

  PQR shall be as per the appropriate design & welding code as specified in applicable

COMPANY specification, and product specification, with the amendments and additions in this Specification.

With:

PQR shall be as per the appropriate design & welding code as specified in Addendum to AGES-SP-07-007 Welding & Non Destructive Examination (NDE) Specification (Doc No. 30201_50150_LT_HE-ADD-SP-07-007), and product specification, with the amendments and additions in this Specification.

- Replace below sentence under Macro Examinations and Hardness Survey:

  The general procedure shall be in accordance with ASTM E384 and NACE SP0472.

  With:

  The general procedure shall be in accordance with ASTM E384 and NACE MR0175 / ISO 15156-2.

- Replace below sentence under Maximum Hardness:

  For other materials not listed, the maximum hardness shall be the maximum parent material hardness in accordance with NACE MR0175 / ISO 15156-3 or NACE MR0103 / ISO 17945 as applicable.

  With:

  For other materials not listed, the maximum hardness shall be the maximum parent material hardness in accordance with NACE MR0175 / ISO 15156-3.

- Replace below sentence under Post Weld Heat Treatment:

  PWHT for martensitic SS shall be in accordance with NACE MR0175 / ISO 15156-3 or NACE MR0103 / ISO 17945 as applicable.

  With:

  PWHT for martensitic SS shall be in accordance with NACE MR0175 / ISO 15156-3.

4.3.37 Amendments to Section 6.2.7.3.8 – Non-destructive Examination

- Replace below sentence at last paragraph in Section 6.2.7.3.8 – Non-destructive Examination:

  The acceptance criteria and aspects of NDE for piping and vessels shall be in accordance with COMPANY welding specification and project welding and NDE specifications.

  With:

  The acceptance criteria and aspects of NDE for piping and vessels shall be in accordance with Addendum to AGES-SP-07-007 Welding & Non Destructive Examination (NDE) Specification (Doc No. 30201_50150_LT_HE-ADD-SP-07-007).

4.3.38 Amendments to Section 7 – Requirements for Sour Service / Wet H_2S in Upstream Oil and Gas

Processing

- Add new Section 7.3 – Amine Service

  All equipment and piping in amine service shall be post-weld heat treated regardless of diameter or wall thickness and in accordance with API RP 945 and NACE SP0472. The PWHT procedure shall consist of heating weldments to 635±15 °C for a hold time of one hour for each 25 mm, or fraction thereof, of metal thickness with a minimum hold time of one hour. This applies also to repair welds and to internal and external attachment welds. The heating band requirement (i.e. not placed completely in the furnace) for equipment and piping shall be as per NACE SP0472 (Appendix D requirements are mandatory).

- Add new Section 7.4 – Caustic Service

  All equipment and piping in caustic service shall be PWHT'd in accordance with API 571 / NACE SP0403. The PWHT procedure shall consist of heating weldments to 635±15 °C for CS and low alloy for a hold time of one hour for each 25 mm, or fraction thereof, of metal thickness with a minimum hold time of one hour. The same requirement applies to repair welds and to internal and external attachment welds. The heating band requirement for piping shall be as per NACE SP0403.

4.3.39 Amendments to Section 7.1.5.3 – PWHT

- Replace below sentence in Section 7.1.5.3 – PWHT:

  PWHT of piping systems, pressure vessels and equipment shall be according to COMPANY welding specification, and project welding and NDE specifications, in addition to the requirement as specified below:

  With:

  PWHT of piping systems, pressure vessels and equipment shall be according to Addendum to AGES-SP-07-007 Welding & Non Destructive Examination (NDE) Specification (Doc No. 30201_50150_LT_HE-ADD-SP-07-007), in addition to the requirement as specified below:

4.3.40 Amendments to Section 8 – Requirements for Severe Service in Downstream Refinery

- Delete the whole section and sub-section (including its enclosed paragraph) under Section 8 Requirements for Severe Service in Downstream Refinery.

4.3.41 Amendments to Section 9.4 – GRE / GRP Pipe

- Replace below sentence in Section 9.4 GRE / GRP Pipe:

  Glass Reinforced Epoxy / Polymer (GRE / P) pipe shall be in accordance with COMPANY standard for "Glass fibre Reinforced Plastic Piping and Pipeline System" and ISO 14692.

  With:

  Glass Reinforced Epoxy / Polymer (GRE / P) pipe shall be in accordance with Addendum

to AGES-SP-09-014 Fibre Reinforced Plastic Piping and Pipeline System (Doc. No. 30201_50150_LT_HE-ADD-SP-09-014) and ISO 14692.

4.3.42 Amendments to Section 10.1 – Pipe Fittings and Flanges

- Replace below sentence under Hardness Testing:

  The maximum allowable hardness shall not exceed the hardness values as specified in NACE MR0175 / ISO 15156 and NACE MR0103 / ISO 17945 as applicable.

  With:

  The maximum allowable hardness shall not exceed the hardness values as specified in NACE MR0175 / ISO 15156.

4.3.43 Amendments to Section 10.2 – Fasteners

- Replace below 1st paragraph under Specifications and Grades:

  Bolting / fastener material shall follow the associated piping class with respect to the applicability of NACE MR0175 / ISO 15156 or NACE MR0103 / ISO 17945.

  With:

  Bolting / fastener material shall follow the associated piping class with respect to the NACE MR0175 / ISO 15156.

- Replace below sentence under the last paragraph of Specifications and Grades:

  Alternatively, low alloy bolts (HDG) for external environments maybe specified depending on operating temperature envelope and shall comply with applicable project Specifications.

  With:

  Alternatively, low alloy Hot Dip Galvanized (HDG) bolts for external environments maybe specified depending on operating temperature envelope and shall comply with Addendum to AGES-SP-09-005 Specification for Gasket and Fasteners (Doc. No. 30201_50150_LT_HE-ADD-SP-09-005).

- Replace below 2nd paragraph under Manufacturing:

  If specified by COMPANY, other CRA or SS materials may be used for applications provided that the material complies with NACE MR0175 / ISO 15156-3 or NACE MR0103 / ISO 17945 as applicable.

  With:

  If specified by COMPANY, other CRA or SS materials may be used for applications provided that the material complies with NACE MR0175 / ISO 15156-3.

4.3.44 Amendments to Section 10.3 – Valves

- Replace below 1st paragraph under Specifications and Grades:

All valve materials in sour service / wet H_2S service shall comply with the requirements of their associated piping class and shall meet the subsequent requirements of NACE MR0175 / ISO 15156 and NACE MR0103 / ISO 17945 for upstream oil and gas processing facilities and downstream refinery, respectively.

With:

All valve materials in sour service / wet H_2S service shall comply with the requirements of their associated piping class and shall meet the subsequent requirements of NACE MR0175 / ISO 15156 for upstream oil and gas processing facilities.

- Replace below 3rd paragraph under Specifications and Grades:

  The use of austenitic and martensitic SS for any valve component shall meet the service requirements of Section 6.2 and 6.2.3, respectively.

  With:

  The use of austenitic and martensitic SS for any valve component shall meet the service requirements in Section 6.2.2 and 6.2.3 of this Specification, respectively.

- Replace below sentence under Manufacturing:

  In addition to the material requirements of the NACE MR0175 / ISO 15156 or NACE MR0103 / ISO 17945 as applicable, the following additional material requirements shall be applicable.

  With:

  In addition to the material requirements of the NACE MR0175 / ISO 15156, the following additional material requirements shall be applicable.

- Replace below sentence under Hardness:

  The hardness requirements shall comply with NACE MR0175 / ISO 15156 and NACE MR0103 / ISO 17945 for gas and oil processing facilities and oil downstream refinery, respectively.

  With:

  The hardness requirements shall comply with NACE MR0175 / ISO 15156 for gas and oil processing facilities.

4.3.45 Amendments to Section 10.4 – Rotating Equipment

- Replace below 1st paragraph under Specifications and Grades:

  Where CS plate is used for fabricated casings, requirement of Section 6 to Section 8 shall be followed as applicable.

  With:

  Where CS plate is used for fabricated casings, requirement of Section 6 and Section 7

shall be followed as applicable.

- Replace below 3rd paragraph under Specifications and Grades:

  The specification and grades of materials for pumps in varying severities of services shall be selected in alignment with the material classes specified in API STD 610.

  With:

  The specification and grades of materials for pumps in varying severities of services shall be selected in alignment with the material classes specified in Addendum to AGES-SP-05-001 Centrifugal Pump (API 610) Specification (Doc. No. 30201_50150_LT_HE-ADD-SP-05-001).

- Replace below sentence at 4th paragraph under Specifications and Grades:

  The selection must follow the requirements of NACE MR0175 / ISO 15156-3 or NACE MR0103 / ISO 17945, as applicable, along with the following requirements:

  With:

  The selection must follow the requirements of NACE MR0175 / ISO 15156-3 along with the following requirements:

- Replace below point (f) at 4th paragraph under Specifications and Grades:

  f. Trim, overlays and hard facings shall be in accordance with NACE MR0175 / ISO 15156-3 or NACE MR0103 / ISO 17945, as applicable.

  With:

  f. Trim, overlays and hard facings shall be in accordance with NACE MR0175 / ISO 15156-3.

- Replace below sentence at 3rd paragraph under Manufacture:

  K Monel and Inconel X-750 shafts shall also be in accordance with NACE MR0103 / ISO 17945 or NACE MR0175 / ISO 15156-3 as applicable.

  With:

  K Monel and Inconel X-750 shafts shall also be in accordance with NACE MR0175 / ISO 15156-3.

- Replace below 4th and 5th paragraph under Manufacture:

  Centrifugal pumps shall conform to API STD 610 and any other additional requirements specified by the COMPANY in the Purchase Order.

  Centrifugal compressors shall conform to API STD 617 and any other additional requirements specified by the COMPANY in the Purchase Order.

  With:

Centrifugal pumps shall conform to Addendum to AGES-SP-05-001 Centrifugal Pump (API 610) Specification (Doc. No. 30201_50150_LT_HE-ADD-SP-05-001) and any other additional requirements specified by the COMPANY in the Purchase Order.

Centrifugal compressors shall conform to Addendum to AGES-SP-05-002 Centrifugal Compressors Specification (API 617) (Doc. No. 30201_50150_LT_HE-ADD-SP-05-002) and any other additional requirements specified by the COMPANY in the Purchase Order.

- Replace below sentence under Hardness:

  All pressure-retaining welds shall be hardness tested in accordance with NACE SP0472 after PWHT. Weld metal hardness shall be in accordance with NACE MR0103 / ISO 17945 or NACE MR0175 / ISO 15156-3 as applicable.

  With:

  All pressure-retaining welds shall be hardness tested in accordance with this Specification and NACE MR0175 / ISO 15156 as applicable.

4.3.46 Amendments to Section 10.6 – Atmospheric Storage Tanks

- Replace below 1st paragraph:

  Storage tanks shall conform to API STD 650, and the tanks plates shall be “Z” quality as per APPENDIX A3 of this Specification.

  With:

  Storage tanks shall conform to Addendum to AGES-SP-06-005 (Above Ground Vertical Storage Tanks Specification (Doc. No. 30201_50150_LT_HE-ADD-SP-06-005), and the tanks plates shall be “Z” quality as per APPENDIX A3 of this Specification.

- Replace below sentence at 3rd paragraph:

  PWHT of fabrication welds is not required provided the hardness of weld and HAZ in PQR tests comply with NACE MR0103 / ISO 17945 or NACE MR0103 / ISO 17945 and NACE SP 0472 requirements as applicable

  With:

  PWHT of fabrication welds is not required provided the hardness of weld and HAZ in PQR tests comply with NACE MR0175 / ISO 15156 requirements.

4.3.47 Amendments to Section 10.7 – Instrumentation

- Replace below 2nd paragraph under Specifications and Grades:

  Internal instrument components that cannot be heat-treated or require high hardness shall be fabricated from materials and in conditions allowed by NACE MR0103 / ISO 17945 or NACE MR0103 / ISO 17945 as applicable.

  With:

Internal instrument components that cannot be heat-treated or require high hardness shall be fabricated from materials and in conditions allowed by NACE MR0175 / ISO 15156.

4.3.48 Amendments to Section 10.8 – Heat Exchanger Tubing

- Replace below sentence in Section 10.8 Heat Exchanger Tubing:

  Heat exchanger tubing shall meet the material, inspection and testing requirements given in API STD 660 or API STD 661 as applicable, along with the following.

  With:

  Heat exchanger tubing shall meet the material, inspection and testing requirements given in Addendum to AGES-SP-06-003 (Shell and Tube Heat Exchanger Specification) (Doc. No. 30201_50150_LT_HE-ADD-SP-06-003) or Addendum to AGES-SP-06-004 (Air Cooled Heat Exchanger Specification) (Doc. No. 30201_50150_LT_HE-ADD-SP-06-004) as applicable, along with the following requirements in this section.

- Replace below sentence under <u>Manufacture</u>:

  Base materials shall be supplied in the normalised condition. Any tubing formed by bending / cold-working shall be undergo stress relief heat treatment in accordance with NACE SP0472.

  All tubes, including U-tubes, shall be formed from a single length and shall have no circumferential welds, unless approved by the purchaser.

  With:

  Base materials shall be supplied in the normalised condition. Any tubing formed by bending / cold-working shall be undergo stress relief heat treatment in accordance with Addendum to AGES-SP-06-003 (Shell and Tube Heat Exchanger Specification) (Doc. No. 30201_50150_LT_HE-ADD-SP-06-003) or Addendum to AGES-SP-06-004 (Air Cooled Heat Exchanger Specification) (Doc. No. 30201_50150_LT_HE-ADD-SP-06-004) as applicable.

  All tubes, including U-tubes, shall be formed from a single length and shall have no circumferential welds, unless approved by EPCm CONTRACTOR and COMPANY.

- Replace below sentence under <u>Hardness Testing</u>:

  All CS and ASS material shall comply to the maximum hardness specified by NACE MR0103 / ISO 17945 or NACE MR0103 / ISO 17945 as applicable.

  With:

  All CS and ASS material shall comply to the maximum hardness specified by NACE MR0175 / ISO 15156.

4.3.49 Amendments to Section 10.10 – Flexible Line Pipe

- Delete the whole Section 10.10 Flexible Line Pipe (including its enclosed paragraph).

4.3.50 Amendments to Section 11 – TESTING

- Replace below 1st sentence in Section 11 – TESTING:

  Table A5. 1 in APPENDIX A5 summarises the testing requirements for all CS product forms.

  With:

  Table A5. 1 in APPENDIX-01 of this addendum summarises the testing requirements for all CS product forms.

4.3.51 Amendments to Section 11.1.2 – Production Impact Test Plates

- Replace below 1st sentence at 3rd paragraph in Section 11.1.2 – Production Impact Test Plates:

  Impact testing details for welds, both during procedure qualification and during production shall be per the ASME Code.

  With:

  Impact testing details for welds, both during procedure qualification and during production shall be per applicable ASME design Code and Addendum to AGES-SP-07-007 Welding & Non Destructive Examination (NDE) (Doc. No. 30201_50150_LT_HE-ADD-SP-07-007) as applicable.

4.3.52 Amendments to Section 11.1.3 – Production Hardness Testing

- Replace below 3rd sentence at point (c) in Section 11.1.3 – Production Hardness Testing:

  The use of methods other than portable Brinell tester require CONTRACTOR approval.

  With:

  The use of methods other than portable Brinell tester require COMPANY approval.

- Replace below 5th paragraph:

  The CONTRACTOR representative(s) may witness the performance of production hardness testing. The documented test results shall be submitted to the CONTRACTOR when requested.

  With:

  The EPCm CONTRACTOR and COMPANY representative(s) may witness the performance of production hardness testing. The documented test results shall be submitted to the EPCm CONTRACTOR and COMPANY when requested.

- Delete below 6th paragraph:

For downstream refinery applications, all pressure-retaining welds that fall within the scope of NACE SP0472 shall be hardness tested after final PWHT. Weld metal hardness shall not exceed 200 HBW. Unless exempted by NACE SP0472, the SUPPLIER shall perform Brinell hardness tests on every 3 m of main seam weld, but not less than one set of readings for each main seam. One Brinell hardness reading shall be taken on each nozzle weld, manway weld and piping buttweld. When access is available, tests shall be performed on the process contacted side of the weld. Hardness test results and loc

4.3.53 Amendments to Section 11.1.4 – Weld Procedure Qualification Hardness Testing

- Replace below 1st sentence in Section 11.1.4 - Weld Procedure Qualification Hardness Testing:

  Each PQR shall include a macro section and Vickers hardness readings - indicated in APPENDIX A4 as per NACE SP0472 with minimum 3 hardness measurement indentations in each area of the HAZ and in each of the weld metal base metal.

  With:

  Each PQR shall include a macro section and Vickers hardness readings - indicated in APPENDIX A4 or as per MR0175 / ISO 15156 as applicable.

4.3.54 Amendments to Section 11.3 – Ferrite Testing

- Replace below last sentence in Section 11.3 – Ferrite Testing:

  Documentation of test results shall be available for review by the CONTRACTOR.

  With:

  Documentation of test results shall be available for review by the EPCm CONTRACTOR and COMPANY.

4.3.55 Amendments to Section 11.4.2 – Penetrant Testing

- Replace below last sentence at 2nd paragraph in Section 11.4.2 – Penetrant Testing:

  Testing shall be in accordance with project welding and NDE Specification and the following requirements, unless otherwise authorized by the CONTRACTOR and the COMPANY:

  With:

  Testing shall be in accordance with Addendum to AGES-SP-07-007 Welding & Non Destructive Examination (NDE) (Doc. No. 30201_50150_LT_HE-ADD-SP-07-007) and the following requirements, unless otherwise authorized by the EPCm CONTRACTOR and the COMPANY:

- Replace below last paragraph in Section 11.4.2 – Penetrant Testing:

  UT shall be used in lieu of WFMT with the prior approval from the Contractor if there is no access to the internal weld surfaces.

With:

UT shall be used in lieu of WFMT with the prior approval from the COMPANY if there is no access to the internal weld surfaces.

4.3.56 Amendments to Section 11.6 – Intergranular Corrosion and Pitting Testing for ASS & CRAs Materials

- Add below under Section 11.6 – Intergranular Corrosion and Pitting Testing for ASS & CRAs Materials:

Table 11.2 Pitting Corrosion Test Requirements for Alloy 825 and 625

Material	Test Requirements
Alloy 825	ASTM G48 Method A
Alloy 625	ASTM G48 Method A

Acceptance Criteria:

For ASS, the Intergranular Corrosion Test (IGC) shall be performed in accordance with ASTM A262 Practice E method. The acceptance criteria will be no visible corrosion, no fissures, and no cracking at 5 to 20x magnification.

For Alloy 825 and Alloy 625:

- An IGC in accordance with ASTM G28 Method A shall be performed with maximum corrosion rate acceptance not exceeding 0.9 mm per year
- A pitting corrosion test shall be done in conformance with ASTM G48 Method A. No pitting shall be visible at a 20x magnification, and the weight loss shall be less than 4.0 g/m^2/24h at 22 °C for UNS N08825 and 40 °C for UNS N06625.

4.4 AMENDMENTS TO SECTION C – OTHER REQUIREMENTS

4.4.1 Amendments to Section 15 – Material Certification

- Replace 1st sentence at 1st paragraph:

Certification for all materials / equipment in severe service environments shall adhere to the requirements of NACE MR0175 / ISO 15156 or NACE MR0103 / ISO 17945, as applicable.

With:

Certification for all materials / equipment in severe service environments shall adhere to the requirements of NACE MR0175 / ISO 15156.

4.5 AMENDMENTS TO SECTION E – MATERIAL TESTING

4.5.1 Amendments to Section A1.1 – Scope

- Replace below sentence at 2nd paragraph:

Appendix 1 may also be referenced when industry experience has shown problems with specific refinery services, or when it is a process licensor requirement.

With:

Appendix A1 may also be referenced when industry experience has shown problems with specific sour services, or when it is a process licensor requirement.

4.5.2 Amendments to Section A4 – Hardness Testing

- Replace below sentence:

  NACE MR0175 / ISO 15156-2 and NACE MR0103 / ISO 17945 contains suitable survey plans for common weld geometries and for weld overlay and shall comply to as applicable.

  With:

  NACE MR0175 / ISO 15156-2 contains suitable survey plans for common weld and weld repair including weld overlay geometries.

4.6 AMENDMENTS TO APPENDIX A5

Replace Table A5.1 Summary of Additional Testing Requirements for Carbon Steel Products in Severe Service with APPENDIX-01 of this Addendum.

APPENDIX-01 TESTING AND INSPECTION REQUIREMENTS FOR CS PRODUCTS IN SEVERE SERVICE

ADDENDUM TO AGES-SP-07-003 REQUIREMENTS FOR MATERIALS IN SEVERE SERVICE

APPENDIX-01
TESTING AND INSPECTION REQUIREMENTS FOR CS PRODUCTS IN SEVERE SERVICE

Table A5. 1 Summary of Additional Testing Requirements for Carbon Steel Products in Severe Service

Item / Component	Test Methods				Examination Methods		
	Mechanical	HIC	SSC	Hardness	VT	WFMT	RT / UT
Plate for Vessels and Equipment (Section 6.1)	Testing as per relevant standard and section	APPENDIX A1	Need for SSC / SOHIC testing to be determined on project-by- project basis	NACE MR0175 / ISO 15156	100 %	-	UT – ASTM A578 S2.2
Seamless Pipe (ASTM) for Process Piping (Section 6.1.3.2)	Testing as per relevant standard and section	Not required if sulphur < 0.008 wt%. Otherwise as APPENDIX A1	Not required if specification is met, otherwise as per APPENDIX A2	NACE MR0175 / ISO 15156	100 %	-	UT – ASTM E213
Seamless Pipe (API 5L) for Process Piping (Section 6.1.3.3)	Testing as per relevant standard and section			NACE MR0175 / ISO 15156	100 %	-	API 5L Annex K
Welded Pipe (ASTM) for Process Piping (Section 6.1.3.4)	Testing as per relevant standard and section	APPENDIX A1	Cross-weld SCC test as per APPENDIX A2	NACE MR0175 / ISO 15156	100 %	Pipe end face	Plate: UT – ASTM A578 S2.2 Weld Seam: 100 % UT
Welded Pipe (API 5L) for Process Piping (Section 6.1.3.5)	Testing as per relevant standard and section	APPENDIX A1	API 5L Annex H PSL2 (Need for SSC / SOHIC testing to be determined on project-by- project basis depending on sour severity category and service conditions)	NACE MR0175 / ISO 15156	100 %	-	API 5L Annex K
Transmission Line Pipe (Section 6.1.4.1 / Section 6.1.4.2)	Testing as per relevant standard and section	APPENDIX A1	APPENDIX A2 Seamless and welded line pipe shall confirm to Addendum to AGES-SP-10-001 Specification for Linepipe (Doc. No. 30001-50150P-ADD-SP-10-001) and API 5L (PSL2) + Annex H	NACE MR0175 / ISO 15156	100 %	-	Annex H and Annex K of Addendum to AGES-SP-10-001 Specification for Linepipe (Doc. No. 30001-50150P-ADD-SP-10-001)
Forgings (Section 6.1.5)	Testing as per relevant standard and section	-	-	NACE MR0175 / ISO 15156	100 %	100 %	-
Castings (Section 6.1.6)	Testing as per relevant standard and section	-	-	NACE MR0175 / ISO 15156	100 %	MSS-SP 53	As per 6.1.6, castings shall be examined for internal defects by radiography in accordance with MSS SP 54 or equivalent procedure approved by COMPANY

APPENDIX-02 AGES-SP-07-003

THE CONTENTS OF THIS DOCUMENT ARE PROPRIETARY AND CONFIDENTIAL.

أدنوك
ADNOC

ADNOC GROUP PROJECTS AND ENGINEERING

REQUIREMENTS FOR MATERIALS IN SEVERE SERVICE

Specification

APPROVED BY:

Abdulmunim Saif Al Kindy

NAME: Abdulmunim Al Kindy
TITLE: Executive Director PT&CS
EFFECTIVE DATE:

AGES-SP-07-003

ص ب 898، أبوظبي، الإمارات العربية المتحدة
PO Box 898, Abu Dhabi, UAE
adnoc.ae

شركة بترول أبوظبي الوطنية
Abu Dhabi National Oil Company

All parties consent to this document being signed electronically -PT&CS/GP/INT/2021/3344

GROUP PROJECTS & ENGINEERING / PT&CS DIRECTORATE

CUSTODIAN	Group Projects & Engineering / PT&CS
ADNOC	Specification applicable to ADNOC & ADNOC Group Companies

REVISION HISTORY

DATE	REV. NO	PREPARED BY (Designation / Initial)	REVIEWED BY (Designation / Initial)	ENDORSED BY (Designation / Initial)	ENDORSED BY (Designation / Initial)
21-Jan-2021	1	Hesham Ahmed Elashkar Senior Specialist, Material Engineering	Ashwani Kumar Kataria / A / MIHE,TC-Eng Reuben Yagambaram / Senior Advisor, Upstream Offshore Projects	Abdulla Al Shaiba / VP-GPE	Zaher Salem / SVP-GPE

Group Projects & Engineering is the owner of this Specification and responsible for its custody, maintenance and periodic update.

In addition, Group Projects & Engineering is responsible for communication and distribution of any changes to this Specification and its version control.

This specification will be reviewed and updated in case of any changes affecting the activities described in this specification.

All parties consent to this document being signed electronically -PT&CS/GP/INT/2021/3344

INTER-RELATIONSHIPS AND STAKEHOLDERS

a. The following are inter-relationships for implementation of this Specification:
   i. ADNOC Upstream and ADNOC Downstream Directorates; and
   ii. ADNOC Onshore, ADNOC Offshore, ADNOC Sour Gas, ADNOC Gas Processing. ADNOC LNG, ADNOC Refining, Fertil, Borouge, Al Dhafra Petroleum, Al Yasat
b. The following are stakeholders for the purpose of this Specification:
   i. ADNOC PT&CS Directorate
c. This Specification has been approved by the ADNOC PT&CS is to be implemented by each ADNOC Group company included above subject to and in accordance with their Delegation of Authority and other governance-related processes in order to ensure compliance.
d. Each ADNOC Group company must establish / nominate a Technical Authority responsible for compliance with this Specification.

DEFINITIONS

"**ADNOC**" means Abu Dhabi National Oil Company.

"**ADNOC Group**" means ADNOC together with each company in which ADNOC, directly or indirectly, controls fifty percent (50%) or more of the share capital.

"**Approving Authority**" means the decision-making body or employee with the required authority to approve Policies & Procedures or any changes to it.

"**Business Line Directorates**" or "**BLD**" means a directorate of ADNOC which is responsible for one or more Group Companies reporting to, or operating within the same line of business as, such directorate.

"**Business Support Directorates and Functions**" or "**Non- BLD**" means all the ADNOC functions and the remaining directorates, which are not ADNOC Business Line Directorates.

"**CEO**" means chief executive officer.

"**Group Company**" means any company within the ADNOC Group other than ADNOC.

"Specification" means this Requirements for Materials in Severe Service.

CONTROLLED INTRANET COPY

The intranet copy of this document located in the section under Group Policies on One ADNOC is the only controlled document. Copies or extracts of this document, which have been downloaded from the intranet, are uncontrolled copies and cannot be guaranteed to be the latest version.

All parties consent to this document being signed electronically -PT&CS/GP/INT/2021/3344

TABLE OF CONTENTS

1 GENERAL 9

1.1 INTRODUCTION 9

1.2 PURPOSE 9

1.3 DEFINITIONS AND ABBREVIATIONS 9

SECTION A - GENERAL 13

2 REFERENCE DOCUMENTS 13

2.1 INTERNATIONAL CODES AND STANDARDS 13

2.2 ADNOC SPECIFICATIONS 19

3 DOCUMENT PRECEDENCE 20

4 SPECIFICATION DEVIATION / CONCESSION CONTROL 21

SECTION B – TECHNICAL REQUIREMENTS 22

5 SEVERE SERVICE 22

5.1 GENERAL 22

5.2 ENVIRONMENTAL CONDITIONS 22

5.3 WET SYSTEMS 22

5.4 PARTIAL PRESSURE OF H_2S 22

5.5 SOUR SERVICE / WET H_2S ENVIRONMENT - OIL & GAS PRODUCTION 23

5.6 SEVERE SERVICE ENVIRONMENT - REFINERY ENVIRONMENTS 23

5.7 DAMAGE MECHANISMS OF MATERIALS IN SEVERE SERVICE 25

5.8 REQUIREMENTS FOR MATERIALS IN SEVERE SERVICES 27

6 GENERAL REQUIREMENTS FOR SOUR SERVICE / WET H_2S SERVICE 27

6.1 CARBON STEEL 27

6.2 STAINLESS STEELS & OTHER CRA 44

7 REQUIREMENTS FOR SOUR SERVICE / WET H_2S SERVICE IN UPSTREAM OIL AND GAS PROCESSING 50

7.1 REQUIREMENT FOR CARBON STEEL 50

7.2 REQUIREMENT FOR CRA 52

8 REQUIREMENTS FOR SEVERE SERVICE IN DOWNSTREAM REFINERY 53

8.1 REQUIREMENT FOR CARBON STEEL 53

8.2 REQUIREMENT FOR CRA IN DOWNSTREAM REFINERY FACILITIES 60

9 REQUIREMENT FOR NON-METALLIC MATERIALS 61

9.1 GENERAL GUIDANCE 61

All parties consent to this document being signed electronically -PT&CS/GP/INT/2021/3344

9.2 QUALIFICATION AND TESTING 61
9.3 ELASTOMER AND SEAL MATERIALS 62
9.4 GRE / GRP PIPE 62
9.5 INTERNAL COATINGS AND LININGS 62
10 REQUIREMENTS FOR SPECIFIC COMPONENTS 62
10.1 PIPE FITTINGS AND FLANGES 63
10.2 FASTENERS 63
10.3 VALVES 64
10.4 ROTATING EQUIPMENT 66
10.5 BELLOWS 67
10.6 ATMOSPHERIC STORAGE TANKS 67
10.7 INSTRUMENTATION 67
10.8 HEAT EXCHANGER TUBING 68
10.9 FLARE TIPS 68
10.10 FLEXIBLE LINE PIPE 69
11 TESTING 69
11.1 MECHANICAL TESTING OF BASE METAL AND WELD METAL 69
11.2 CHEMICAL ANALYSIS 71
11.3 FERRITE TESTING 71
11.4 NON-DESTRUCTIVE EXAMINATION 71
11.5 HYDROSTATIC TESTING 72
11.6 INTERGRANULAR CORROSION AND PITTING TESTING FOR ASS & CRAS MATERIALS 72
SECTION C – OTHER REQUIREMENTS 73
12 DETAILS OF SCOPE SUPPLY 73
13 QUALITY CONTROL AND ASSURANCE 73
14 SUB-CONTRACTORS, SUB-SUPPLERS 73
15 MATERIAL CERTIFICATION 73
16 INSPECTION AND TESTING REQUIREMENTS 73
17 STOCK MATERIAL AND OFF-THE-SHELF EQUIPMENT 74
18 SPARE PARTS 74
19 PAINTING, PRESERVATION AND SHIPMENT 74
20 COMMISSIONING 74
21 TRAINING 74

All parties consent to this document being signed electronically -PT&CS/GP/INT/2021/3344

22 DOCUMENTATION / MANUFACTURER DATA RECORDS 74
23 GUARANTEES AND WARRANTY 75
SECTION D – STANDARD DRAWINGS & DATASHEETS 76
24 DATASHEET TEMPLATES 76
25 STANDARD DRAWINGS 76
SECTION E - MATERIAL TESTING 77
APPENDIX A1. REQUIREMENTS FOR HIC (AND SWC) TESTED STEEL PLATE 77
APPENDIX A2. REQUIREMENTS FOR SSC, SZC, AND SOHIC TESTING 84
APPENDIX A3. THROUGH-THICKNESS TESTING - CARBON STEEL PLATES 86
APPENDIX A4. HARDNESS TESTING 89
APPENDIX A5. TESTING AND INSPECTION REQUIREMENTS FOR CS PRODUCTS IN SEVERE SERVICE 90

All parties consent to this document being signed electronically -PT&CS/GP/INT/2021/3344

LIST OF TABLES

TABLE 1.1 LIST OF ABBREVIATIONS 10
TABLE 5.1 LIST OF DAMAGE MECHANISMS 25
TABLE 6.1 ELEMENT WT.% MAXIMUM CHEMISTRY REQUIREMENTS FOR PLATE MATERIAL 29
TABLE 6.2 ELEMENT WT.% MAXIMUM CHEMISTRY REQUIREMENTS FOR PROCESS PIPING 30
TABLE 6.3 MPQ LIST OF TESTS FOR WELDED PIPE 33
TABLE 6.4 ELEMENT WT.% MAXIMUM CHEMISTRY REQUIREMENTS FOR CASTINGS 37
TABLE 6.5 PRODUCTION WELD HARDNESS TESTING FREQUENCY REQUIREMENTS 42
TABLE 6.6 NDE COVERAGE FOR PRESSURE CONTAINMENT CS WELDS 43
TABLE 6.7 LIMITATION OF MARTENSITIC STAINLESS STEEL FOR PRESSURE CONTAINING ITEMS 44
TABLE 6.8 PRECIPITATION HARDENED STAINLESS STEEL FOR VALVE-STEMS AND SHAFTS 45
TABLE 6.9 PQR HARDNESS REQUIREMENTS 47
TABLE 6.10 PRODUCTION WELD TEST HARDNESS REQUIREMENTS 49
TABLE 6.11 NDE COVERAGE FOR PRESSURE CONTAINMENT SS / CRA WELDS 49
TABLE 8.1 SSC SEVERITY CATEGORIES 54
TABLE 8.2 HIC / SOHIC SEVERITY CATEGORIES 55
TABLE 8.3 ACSCC SEVERITY CATEGORIES 55
TABLE 8.4 MATERIAL REQUIREMENT FOR SEVERITY SERVICES 57
TABLE 10.1 SPECIFICATIONS AND GRADES OF FASTENER MATERIALS 64
TABLE 11.1 INTERGRANULAR CORROSION TEST REQUIREMENTS FOR SS AND CRAS 72

TABLE A1. 1TESTING FREQUENCY FOR HIC RESISTANT PLATE 80
TABLE A1. 2 PH AND H_2S LIMITS THROUGHOUT NACE TM0284 TEST 81
TABLE A1. 3 ACCEPTANCE CRITERIA FOR PLATE FOR PIPE-MAKING AND VESSEL FABRICATIONS; PROCESS PIPING, LINE PIPE & PIPE FITTINGS 82

All parties consent to this document being signed electronically -PT&CS/GP/INT/2021/3344

LIST OF FIGURES

FIGURE A3. 1 LOCATION OF THROUGH-THICKNESS TENSILE TEST SPECIMENS 87
FIGURE A3. 2 POSITION AND SIZE OF TEST SPECIMENS 87

FIGURE A4. 1 WELD PROCEDURE QUALIFICATION HARDNESS SURVEY 89

TABLE A5. 1 SUMMARY OF ADDITIONAL TESTING REQUIREMENTS FOR CARBON STEEL PRODUCTS IN SEVERE SERVICE 90

All parties consent to this document being signed electronically -PT&CS/GP/INT/2021/3344

1 GENERAL

1.1 Introduction

This Specification states the material and fabrication requirements for both metallic and non-metallic materials to be specified when selecting materials for severe service environments. General requirements for severe services are given before the Specification is split into specific requirements for upstream oil and gas processing facilities, and downstream refineries. These requirements include exact specifications and grades for steel items and equipment, chemical and mechanical qualifications including hardness testing, manufacturing processes, heat treatments, and non-destructive examination tests. Where materials are to be specified as per internationally recognised standards, exact details are not repeated within this Specification, but referenced to the applicable standard.

This Specification also includes requirements for applicable fabrication and welding processes for steel items, including cladding and weld overlays, as well as requirements for testing standards.

This Specification does not cover the base requirements for materials and fabrication methods outside of those specifically required for severe services, and therefore, this Specification must be used in addition with the prerequisite material selection guidelines.

1.2 Purpose

The purpose of this Specification is to provide an introduction and definition of the common severe services found with upstream and downstream oil and gas processes, provide insight to mitigation strategies for potential damage mechanisms, and to assist in writing material and fabrication specifications when selecting materials for said services. Requirements of this specification are intended to reduce the risk of cracking when exposed to these severe environments.

1.3 Definitions and Abbreviations

The following defined terms are used throughout this Specification:

'**[PSR]**' indicates a mandatory Process Safety Requirement

"**COMPANY**" means ADNOC, ADNOC Group or an ADNOC Group Company, and includes any agent or consultant authorized to act for, and on behalf of the COMPANY.

"**CONTRACTOR**" means the parties that carry out all or part of the design, engineering, procurement, construction, commissioning or management for ADNOC projects. CONTRACTOR includes its approved MANUFACTURER(s), SUPPLIER(s), SUB-SUPPLIER(s) and SUB-CONTRACTOR(s).

"**MANUFACTURER**" means the Original Equipment Manufacturer (OEM) or MANUFACTURER of one or more of the component(s) which make up a sub-assembly or item of equipment assembled by the main SUPPLIER or his nominated SUB-SUPPLIER.

'may' means a permitted option.

'shall' indicates mandatory requirements.

'should' means a recommendation.

"**SUB-CONTRACTOR**" means any party engaged by the CONTRACTOR to undertake any assigned work on their behalf. COMPANY maintains the right to review all proposed SUB-CONTRACTORs; this right does not relieve the CONTRACTOR of their obligations under the Contract, nor does it create any contractual relationship between COMPANY and the SUB-CONTRACTOR.

All parties consent to this document being signed electronically -PT&CS/GP/INT/2021/3344

"SUPPLIER" means the party entering into a Contract with COMPANY to provide the materials, equipment, supporting technical documents and / or drawings, guarantees, warranties and / or agreed services in accordance with the requirements of the purchase order and relevant specification(s). The term SUPPLIER includes any legally appointed successors and / or nominated representatives of the SUPPLIER.

"**SUB-SUPPLIER**" means the sub-contracted SUPPLIER of equipment sub-components software and / or support services relating to the equipment / package, or part thereof, to be provided by the SUPPLIER. COMPANY maintains the right to review all proposed SUB-SUPPLIERS, but this right does not relieve the SUPPLIER of their obligations under the Contract, nor does it create any contractual relationship between COMPANY and any individual SUB-SUPPLIER.

The abbreviations used throughout this Specification are shown in Table 1.1.

Table 1.1 List of Abbreviations

Abbreviations	
ACSCC	Alkaline Carbonate Stress Corrosion Cracking
API	American Petroleum Institute
ASCC	Amine Stress Corrosion Cracking
ASME	American Society of Mechanical Engineers
ASTM	American Society for Testing and Material
AWS	American Welding Society
ASS	Austenitic Stainless Steel
BS EN	British Standard European Norm.
CE(V)	Carbon Equivalent (Value)
CLR	Crack Length Ratio
CLSCC	Chloride Stress Corrosion Cracking
CMTR	Certified Material Test Report
CNAF	Compressed Non-Asbestos Fibre
CRA	Corrosion Resistant Alloy
CR	Criticality Rating
CS	Carbon Steel
CSCC	Caustic Stress Corrosion Cracking
CSR	Crack Sensitivity Ratio
CTR	Crack Thickness Ratio
DPT	Dye-penetrant Testing
DSS	Duplex Stainless Steel
ENP	Electro-Nickel Plating
FCAW	Flux Cored Arc Welding
FCCU	Fluid Catalytic Cracking Unit

All parties consent to this document being signed electronically -PT&CS/GP/INT/2021/3344

Abbreviations	
FEPM	Tetrafluoroethylene Propylene
FFKM	Perfluoro Elastomer
FKM	Fluorocarbon Elastomer
GHSC	Galvanically Induced Hydrogen Stress Cracking
GMAW	Gas Metal Arc Welding
GRE / P	Glass Reinforced Epoxy / Polymer
GTAW	Gas Tungsten Arc Welding
HAZ	Heat Affected Zone
HBW	Hardness Brinell with a carbide ball indenter according to ASTM E 10 is noted HBW
HFW	High-frequency Electric Resistance Welding
HIC	Hydrogen Induced Cracking
HNBR	Hydronated Nitrile Butadiene Rubber
HRC	Rockwell hardness – C scale
HSS	High Severity Service
HV	Hardness Vickers
ISO	International Standards Organisation
LNG	Liquified Natural Gas
LSS	Low Severity Service
MDMT	Minimum Design Metal Temperature
MPQ	Manufacturing Procedure Qualification
MRB	Manufacturing Record Book
MS	Thermo-mechanically Rolled
MSS	Manufacturers Standardization Society
MPT	Magnetic Particle Testing
NACE	National Association of Corrosion Engineers
NBR	Nitrile Butadiene Rubber
NDE	Non-destructive Examination
NORSOK	Norsk Sokkels Konkurranseposisjon
NS	Normalised
PEEK	Polyether Ether Ketone
PPS	Polyphenylene Sulphide
PREN	Pitting Resistance Equivalent Number
PTFE	Polytetrafluoroethylene
PWHT	Post Weld Heat Treatment

All parties consent to this document being signed electronically -PT&CS/GP/INT/2021/3344

Abbreviations	
QTR	Qualification Test Record
REAC	Reactor Effluent Air Cooler
RT	Radiographic Testing
RTR	Reinforced Thermosetting Resin
SAW	Submerged Arc Welding
SDSS	Super Duplex Stainless Steel
SMAW	Shielded Metal Arc Welding
SOHIC	Stress Oriented Hydrogen Induced Cracking
SRU	Sulphur Recovery Unit
SS	Stainless Steel
SSC	Sulphide Stress Cracking
SWC	Step-wise Cracking
SZC	Soft-zone Cracking
TOFD	Time of Flight Diffraction
UAE	United Arab Emirates
UNS	Unified Numbering System
UT	Ultrasonic Testing
WFMT	Wet Fluorescent Magnetic Particle Testing
PQR	Weld Procedure Qualification
WRC	Welding Research Council
WRPQ	Weld Repair Procedure Qualification

All parties consent to this document being signed electronically -PT&CS/GP/INT/2021/3344

SECTION A - GENERAL

2 REFERENCE DOCUMENTS

2.1 International Codes and Standards

The following Codes and Standards shall form a part of this Specification. When an edition date is not indicated for a Code or Standard, the latest edition in force at the time of the contract award shall apply.

AMERICAN PETROLEUM INSTITUTE

API 5L	Specification for Line Pipe
API 5LC	CRA Linepipe
API 5LD	CRA clad or Line Steel Pipe
API RP 17B	Recommended Practice for Flexible Pipe
API RP 571	Damage Mechanisms Affecting Fixed Equipment in the Refining Industry
API RP 945	Avoiding Environmental Cracking in Amine Units
API Spec 17J	Specification for Unbonded Flexible Pipe
API STD 610	Centrifugal Pumps for Petroleum, Petrochemical and Natural Gas Industries
API STD 617	Axial and Centrifugal Compressors and Expander-compressors
API STD 650	Welded Tanks for Oil Storage
API STD 660	Shell-and-tube Heat Exchangers
API STD 661	Petroleum, Petrochemical, and Natural Gas Industries—Air-Cooled Heat Exchangers

AMERICAN SOCIETY OF MECHANICAL ENGINEERS

ASME B16.5	Pipe Flanges and Flanged Fittings NPS 1 / 2 Through NPS 24 Metric / Inch Standard
ASME B31.3	Process Piping
ASME B31.4	Pipeline Transportation Systems for Liquids and Slurries
ASME B31.8	Gas Transmission and Distribution Piping Systems
ASME BPVC Section II	Section II A Ferrous Material Specifications
ASME BPVC Section IX	Section IX Qualification Standard for Welding, Brazing, and Fusing Procedures
ASME V	Section V Non-destructive Examination
ASME BPVC Section VIII	Section VIII Rules for Construction of Pressure Vessels
ASME BPVC Code Case 2235	Use of Ultrasonic Examination in Lieu of Radiography Section I; Section VIII, Divisions 1 and 2; and Section XII

All parties consent to this document being signed electronically -PT&CS/GP/INT/2021/3344

AMERICAN SOCIETY OF TESTING AND MATERIALS

ASTM A105	Standard Specification for Carbon Steel Forgings for Piping Applications
ASTM A106	Standard Specification for Seamless Carbon Steel Pipe for High-Temperature Service
ASTM A179	Standard Specification for Seamless Cold-Drawn Low-Carbon Steel Heat-Exchanger and Condenser Tubes
ASTM A182	Standard Specification for Forged or Rolled Alloy and Stainless Steel Pipe Flanges, Forged Fittings, and Valves and Parts for High-Temperature Service
ASTM A193	Standard Specification for Alloy-Steel and Stainless Steel Bolting for High Temperature or High Pressure Service and Other Special Purpose Applications
ASTM A194	Standard Specification for Carbon Steel, Alloy Steel, and Stainless Steel Nuts for Bolts for High Pressure or High Temperature Service, or Both
ASTM A20	General Requirements for Steel Plates for Pressure Vessels
ASTM A210	Standard Specification for Seamless Medium-Carbon Steel Boiler and Superheater Tubes
ASTM A213	Standard Specification for Seamless Ferritic and Austenitic Alloy-Steel Boiler, Superheater, and Heat-Exchanger Tubes
ASTM A214	Standard Specification for Electric-Resistance-Welded Carbon Steel Heat-Exchanger and Condenser Tubes
ASTM A216	Standard Specification for Steel Castings, Carbon, Suitable for Fusion Welding, for High-Temperature Service
ASTM A217	Standard Specification for Steel Castings, Martensitic Stainless and Alloy, for Pressure-Containing Parts, Suitable for High-Temperature Service
ASTM A234	Standard Specification for Piping Fittings of Wrought Carbon Steel and Alloy Steel for Moderate and High Temperature Service
ASTM A240	Standard Specification for Chromium and Chromium-Nickel Stainless Steel Plate, Sheet, and Strip for Pressure Vessels and for General Applications
ASTM A262	Standard Practices for Detecting Susceptibility to Intergranular Attack in Austenitic Stainless Steels
ASTM A278	Standard Specification for Gray Iron Castings for Pressure-Containing Parts for Temperatures Up to 650 °C
ASTM A312	Standard Specification for Seamless, Welded, and Heavily Cold Worked Austenitic Stainless Steel Pipes
ASTM A320	Standard Specification for Alloy-Steel and Stainless Steel Bolting for Low-Temperature Service
ASTM A333	Standard Specification for Seamless and Welded Steel Pipe for Low-Temperature Service and Other Applications with Required Notch Toughness

All parties consent to this document being signed electronically -PT&CS/GP/INT/2021/3344

ASTM A350	Standard Specification for Carbon and Low-Alloy Steel Forgings, Requiring Notch Toughness Testing for Piping Components
ASTM A351	Standard Specification for Castings, Austenitic, for Pressure-Containing Parts
ASTM A352	Standard Specification for Steel Castings, Ferritic and Martensitic, for Pressure-Containing Parts, Suitable for Low-Temperature Service
ASTM A370	Standard Test Methods and Definitions for Mechanical Testing of Steel Products
ASTM A395	Standard Specification for Ferritic Ductile Iron Pressure-Retaining Castings for Use at Elevated Temperatures
ASTM A403	Standard Specification for Wrought Austenitic Stainless Steel Piping Fittings
ASTM A420	Standard Specification for Piping Fittings of Wrought Carbon Steel and Alloy Steel for Low-Temperature Service
ASTM A450	Standard Specification for General Requirements for Carbon and Low Alloy Steel Tubes
ASTM A494	Standard Specification for Castings, Nickel and Nickel Alloy
ASTM A516	Standard Specification for Pressure Vessel Plates, Carbon Steel, for Moderate- and Lower-Temperature Service
ASTM A530	Standard Specification for General Requirements for Specialized Carbon and Alloy Steel Pipe
ASTM A537	Standard Specification for Pressure Vessel Plates, Heat-Treated, Carbon-Manganese-Silicon Steel
ASTM A578	Standard specification for straight-beam ultrasonic examination of rolled steel plates for special applications
ASTM A671	Standard Specification for Electric-Fusion-Welded Steel Pipe for Atmospheric and Lower Temperatures
ASTM A672	Standard Specification for Electric-Fusion-Welded Steel Pipe for High-Pressure Service at Moderate Temperatures
ASTM A694	Standard Specification for Carbon and Alloy Steel Forgings for Pipe Flanges, Fittings, Valves, and Parts for High-Pressure Transmission Service
ASTM A765	Standard Specification for Carbon Steel and Low-Alloy Steel Pressure-Vessel-Component Forgings with Mandatory Toughness Requirements
ASTM A770	Through-Thickness Tension Testing of Steel Plates for Special Applications
ASTM A789	Standard Specification for Seamless and Welded Ferritic / Austenitic Stainless Steel Tubing for General Service
ASTM A790	Standard Specification for Seamless and Welded Ferritic / Austenitic Stainless Steel Pipe
ASTM A815	Standard Specification for Wrought Ferritic, Ferritic / Austenitic, and Martensitic Stainless Steel Piping Fittings

All parties consent to this document being signed electronically -PT&CS/GP/INT/2021/3344

ASTM A833	Standard Test Method for Indentation Hardness of Metallic Materials by Comparison Hardness Testers
ASTM A923	Standard Test Methods for Detecting Detrimental Intermetallic Phases in Duplex Austenitic / Ferritic Stainless Steels
ASTM B163	Standard Specification for Seamless Nickel and Nickel Alloy Condenser and Heat-Exchanger Tubes
ASTM B26	Standard Specification for Aluminium-Alloy Sand Castings
ASTM B366	Standard Specification for Factory-Made Wrought Nickel and Nickel Alloy Fittings
ASTM B407	Standard Specification for Nickel-Iron-Chromium Alloy Seamless Pipe and Tube
ASTM B423	Standard Specification for Nickel-Iron-Chromium-Molybdenum-Copper Alloy (UNS N08825, N08221, and N06845) Seamless Pipe and Tube
ASTM B424	Standard Specification for Nickel-Iron-Chromium-Molybdenum-Copper Alloys Plate, Sheet, and Strip
ASTM B443	Standard Specification for Nickel-Chromium-Molybdenum-Columbium Alloy and Nickel-Chromium-Molybdenum-Silicon Alloy Plate, Sheet, and Strip
ASTM B444	Standard Specification for Nickel-Chromium-Molybdenum-Columbium Alloys (UNS N06625 and UNS N06852) and Nickel-Chromium-Molybdenum-Silicon Alloy (UNS N06219) Pipe and Tube
ASTM B564	Standard Specification for Nickel Alloy Forgings
ASTM B673	Standard Specification for UNS N08925, UNS N08354, and UNS N08926 Welded Pipe
ASTM B677	Standard Specification for UNS N08925, UNS N08354, and UNS N08926 Seamless Pipe and Tube
ASTM B704	Standard Specification for Welded Nickel Alloy Tubes
ASTM E10	Standard Test Method for Brinell Hardness of Metallic Materials
ASTM E45	Standard Test Methods for Determining the Inclusion Content of Steel
ASTM E112	Standard Test Methods for Determining Average Grain Size
ASTM E1268	Standard Practice for Assessing the Degree of Banding or Orientation of Microstructures
ASTM E140	Standard Hardness Conversion Tables for Metals Relationship Among Brinell Hardness, Vickers Hardness, Rockwell Hardness, Superficial Hardness, Knoop Hardness, Scleroscope Hardness, and Leeb Hardness
ASTM E213	Standard Practice for Ultrasonic Testing of Metal Pipe and Tubing
ASTM E384	Standard Test Method for Knoop and Vickers Hardness of Materials
ASTM E562	Standard Test Method for Determining Volume Fraction by Systematic Manual Point Count
ASTM E8	Standard Test Methods for Tension Testing of Metallic Materials
ASTM E92	Test Method for Vickers Hardness of Metallic Materials

All parties consent to this document being signed electronically -PT&CS/GP/INT/2021/3344

ASTM F467	Standard Specification for Nonferrous Nuts for General Use
ASTM F468	Standard Specification for Nonferrous Bolts, Hex Cap Screws, Socket Head Cap Screws, and Studs for General Use
ASTM G28	Standard Test Methods for Detecting Susceptibility to Intergranular Corrosion in Wrought, Nickel-Rich, Chromium-Bearing Alloys
ASTM G48	Standard Test Methods for Pitting and Crevice Corrosion Resistance of Stainless Steels and Related Alloys by Use of Ferric Chloride Solution
ASTM MNL 20	Corrosion Tests and Standards: Application and Interpretation

AMERICAN WELDING SOCIETY

AWS A4.2M / A4.2	Standard Procedures for Calibrating Magnetic Instruments to Measure the Delta Ferrite Content of Austenitic and Duplex Ferritic-Austenitic Stainless Steel Weld Metal

British Standard European Norm

BS 8701	Full Ring Ovalization Test for Determining the Susceptibility to Cracking of Linepipe Steels in Sour Service – Test Method
BS EN 10028-3	Flat Products made of Steels for Pressure Purposes. Weldable Fine Grain Steels, Normalized
BS EN 10028-7	Flat Products Made of Steels for Pressure Purposes. Stainless Steels
BS EN 10160	Ultrasonic Testing of Steel Flat Product of Thickness Equal or Greater than 6 mm (reflection method)
BS EN 10204	Metallic Products. Types of Inspection Documents

INTERNATIONAL STANDARDS ORGANISATION

ISO 18265	Metallic materials -–– Conversion of Hardness Values
ISO 9001	Quality Management Systems – Requirements
ISO 9004	Managing for the sustained success of an organization -–– A quality management approach
ISO 9015-1	Destructive tests on welds in metallic materials – Hardness testing – Part 1: Hardness test on arc welded joints
ISO 14692	Petroleum and Natural Gas Industries. Glass-reinforced Plastics Piping
ISO 17782	Petroleum, Petrochemical and Natural Gas Industries — Scheme for Conformity Assessment of Manufacturers of Special Materials
ISO 19011	Guidelines for Auditing Management Systems

All parties consent to this document being signed electronically -PT&CS/GP/INT/2021/3344

ISO 23936-1	Petroleum, Petrochemical and Natural Gas Industries. Non-metallic Materials in Contact with Media Related to Oil and Gas Production - Part 1: Thermoplastics
ISO 23936-2	Petroleum, Petrochemical and Natural Gas Industries. Non-metallic Materials in Contact with Media Related to Oil and Gas Production - Part 2: Elastomers
ISO 27996	Aerospace Fluid Systems — Elastomer Seals — Storage and Shelf Life
ISO 3183	Petroleum and Natural Gas Industries. Steel Pipe for Pipeline Transportation Systems
ISO 3651-2	Determination of Resistance to Intergranular Corrosion of Stainless Steels. Ferritic, Austenitic and Ferritic-Austenitic (Duplex) Stainless Steels. Corrosion Test in Media Containing Sulphuric Acid
ISO 6892-1	Metallic Materials. Tensile Testing

Material Standardization Society

MSS SP-44	Steel Pipeline Flanges
MSS SP-53	Quality Standard for Steel Castings and Forgings for Valves, Flanges, Fittings, and Other Piping Components – Magnetic Particle Examination Method
MSS SP-54	Quality Standard for Steel Castings for Valves, Flanges, Fittings, and Other Piping Components - Radiographic Examination Method
MSS SP-55	Quality Standard for Steel Castings for Valves, Flanges, Fittings, and Other Piping Components – Visual Method for Evaluation of Surface Irregularities
MSS SP-75	High-Strength, Wrought, Butt-Welding Fittings

NATIONAL ASSOCIATION of CORROSION ENGINEERS

NACE MR0103 / ISO17945	Metallic Materials Resistant to Sulphide Stress Cracking in Corrosive Petroleum Refining Environments
NACE MR0175 / ISO 15156 Part 1 to Part 3	Petroleum, petrochemical and natural gas industries – Materials for use in H_2S containing environments in Upstream Oil and Gas Production
NACE SP0403	Avoiding Caustic Stress Corrosion Cracking of Carbon Steel Downstream Refinery Equipment and Piping
NACE SP0472	Methods and controls to prevent in-service environmental cracking of carbon steel weldments in corrosive petroleum refining environments
NACE TM0177	Laboratory Testing of Metals for Resistance to Sulphide Stress Cracking and Stress Corrosion Cracking in H_2S Environments
NACE TM0187	Standard Test Methods for Evaluating Elastomeric Materials in Sour Gas Environments

All parties consent to this document being signed electronically -PT&CS/GP/INT/2021/3344

NACE TM0284	Standard Test Method – Evaluation of Pipeline and Pressure Vessel Steels for Resistance to Hydrogen Induced Cracking
NACE TM0298	Evaluating the Compatibility of FRP Pipe and Tubulars with Oilfield Environments
NACE TM0316	Standard Test Method - Four-Point Bend Testing of Materials for Oil and Gas Applications

NORSOK

NORSOK M650	Qualification of Manufacturers of Special Materials
NORSOK M710	Qualification of Non-metallic Materials and Manufacturers - Polymers

Welding Research Council

WRC 519	Stainless Steel Weld Metal – Prediction of Ferrite Content

2.2 ADNOC Specifications

AGES-SP-10-001	Specification for Line Pipe (Amendments / Supplements to API Specification 5L)
AGES-SP-10-002	Specification for Subsea Pipeline Systems
AGES-SP-10-003	Onshore Pipeline Design and Construction
AGES-SP-06-002	Pressure Vessel Specification
AGES-SP-04-001	Process Control System
AGS-SP-04-002	Control Valves Specification
AGS-SP-04-005	Emergency Shutdown and On / Off Valves
AGES-PH-04-001	Automation and Instrumentation Design Philosophy
AGS-GL-07-001	Material Selection Guidelines
AGES-SP-06-003	Shell and Tube Heat Exchanger Specification
AGES-SP-09-001	Piping Basis of Design
AGES-SP-09-002	Piping Material Specification Index
AGES-SP-13-001	Criticality Rating

The ADNOC Business Unit specifications listed shall also be considered part of this specification, where indicated as applicable in the Purchase Order.

Applicable ADNOC Business Group specifications shall form part of this specification where they are specifically indicated as applicable in the Purchase Order.

All parties consent to this document being signed electronically -PT&CS/GP/INT/2021/3344

Document Number	Document Title
As Applicable	Design General Specification Requirements for Fibre Reinforced Plastic Pipe & Fittings
As Applicable	Design General Specification Welding and NDE of Piping Systems
As Applicable	Design General Specification Pipeline Welding
As Applicable	Design General Specification Submerged Arc Welded Line Pipes
As Applicable	Design General Specification Criticality Rating System
As Applicable	Design General Specification Minimum Shop Inspection and Certification Requirements
As Applicable	Welded Storage Tanks
As Applicable	Welding and NDE of Pressure Vessels and Heat Exchangers
As Applicable	Radiographic Inspection of Pipeline Welds
As Applicable	Positive Material Identification of Equipment and Piping
As Applicable	Specification for Pre & Post Weld Heat Treatment of Metals
As Applicable	Minimum Shop Inspection and Certification Requirements

3 DOCUMENT PRECEDENCE

The specifications and codes referred to in this Specification shall, unless stated otherwise, be the latest approved issue at the time of contract award.

It shall be the CONTRACTOR's responsibility to be, or to become, knowledgeable of the requirements of the referenced Codes and Standards.

The CONTRACTOR shall notify the COMPANY of any apparent conflict between this specification, the related data sheets, the Codes and Standards and any other specifications noted herein.

Resolution and / or interpretation precedence shall be obtained from the COMPANY in writing before proceeding with the design / manufacture.

In case of conflict, the order of document precedence shall be:

a. UAE Statutory requirements
b. ADNOC HSE Standards
c. Equipment datasheets and drawings
d. Project Specifications and standard drawings
e. Company Specifications
f. National / International Standards

All parties consent to this document being signed electronically -PT&CS/GP/INT/2021/3344

4 SPECIFICATION DEVIATION / CONCESSION CONTROL

Deviations from this Specification are only acceptable where the MANUFACTURER has listed in his quotation the requirements he cannot, or does not wish to comply with, and the COMPANY / CONTRACTOR has accepted in writing the deviations before the order is placed.

In the absence of a list of deviations, it will be assumed that the MANUFACTURER complies fully with this Specification.

All parties consent to this document being signed electronically -PT&CS/GP/INT/2021/3344

SECTION B – TECHNICAL REQUIREMENTS

5 SEVERE SERVICE

5.1 General

Severe services, as defined later in this Specification, include cracking mechanisms applicable to both “upstream oil and gas production facilities” and “downstream oil refineries”. Since cracking mechanisms are not time dependant, or can be readily monitored, these services are deemed severe services.

5.1.1 Classification

The following process environments defined in this Specification shall be considered as severe service:

a. Sour service / Wet H_2S service;

b. Alkaline carbonate services;

c. Amine services with any concentration;

d. Caustic services with any concentration;

e. Ammonium bisulphide NH_4HS with concentration > 2 wt%.

5.2 Environmental Conditions

All start-up, transient, shut down and upset conditions, however short-term, throughout the service life shall be considered in determining the severity of the environment as regards materials design and selection for severe service.

5.3 Wet Systems

Any system where free water is normally present or can condense during operation, including start-up, transient, shutdown, and upset conditions, or due to low external ambient temperatures, shall be classified as “water-wet” for materials design purposes.

Gas lines that operate within 10 °C or less above the water dewpoint according to the “Heat and Mass Balance” data should be considered as “water-wet” for the purpose of this Specification.

5.4 Partial Pressure of H_2S

The partial pressure of H_2S in a gas phase shall be calculated by the method within NACE MR0175 / ISO 15156-2 Annex C. To assess the environmental severity as regards sour service / wet H_2S service, the “total pressure” in this context shall be the maximum design pressure.

For a liquid (such as a liquid line from a separator), the effective partial pressure of H_2S is the partial pressure at the bubble point. In a typical process situation, the partial pressure of H_2S at the last upstream pressure vessel is the correct parameter.

All parties consent to this document being signed electronically -PT&CS/GP/INT/2021/3344

5.5 Sour Service / Wet H_2S Environment - Oil & Gas Production

5.5.1 Carbon and Low Alloy Steels

For CS and low alloy steels, the environment shall be considered as sour if it is water–wet or potentially water-wet and the partial pressure of H_2S in the gas phase is ≥ 0.0035 bar (0.05 psi).

5.5.2 Stainless Steels and Corrosion Resistant Alloys

For SS and CRAs, the environment shall be considered as sour if it is water–wet or potentially water-wet, in addition to the presence of any level of H_2S or dissolved sulphide. The requirement of NACE MR0175 / ISO 15156-3 for determining resistance to SSC, Stress Corrosion Cracking (SCC) and / or Galvanically-induced Hydrogen Stress Cracking (GHSC) shall be applicable.

Note: NACE MR0175 / ISO 15156-3 does NOT define a universal safe lower H_2S limit for SS and CRAs below which the requirements of the Standard do not apply.

5.6 Severe Service Environment - Refinery Environments

5.6.1 General

Applicable severe services for refinery environments, as specified in NACE MR0103 / ISO 17945 and other International Standards are sour service / wet H_2S sour service and alkaline stress corrosion cracking (carbonate service, amine service, and caustic service). Excessive corrosion (thinning mechanism) due to ammonium bisulphide and cracking in elemental sulphur service are also occurs in downstream segment. Severity services in refinery systems have been discussed in following sections.

5.6.2 Sour Service / Wet H_2S Service

"Wet H_2S" service (sour service) is the term commonly used for refinery and gas plant (downstream) environments containing liquid water and H_2S (plus other corrosives or contaminants). While sour service / wet H_2S environment may lead to hydrogen blistering, HIC / SWC, SOHIC and SSC / SZC in CS equipment and piping, ASS and DSS may suffer from CLSCC along with SSC and GHSC. In process streams where the H_2S content varies, peak values shall be used unless approved otherwise by COMPANY. Any of the following conditions shall be regarded as sour service / wet H_2S service:

a. > 50 ppmw dissolved H_2S in the free water (wet H_2S condition, recognition that significant levels of dissolved H_2S can result in SSC even in low pressure systems);

b. A free water pH < 4 and some (⩾1 ppmw total sulphide content) dissolved H_2S present (recognition that in low pH environments significant charging of materials with atomic hydrogen can take place irrespective of H_2S level);

c. A free water pH > 7.6 and > 20 ppmw hydrogen cyanide ions (HCN) and some (⩾1 ppmw total sulphide content) dissolved H_2S in the free water (recognition that at high pH the HCN ions are stable and results in significant charging of ferritic materials by poisoning the formation of a protective iron sulphide scale);

d. >0.3 KPa abs (0.05 psia) partial pressure H_2S in a process with a gas.

All parties consent to this document being signed electronically -PT&CS/GP/INT/2021/3344

5.6.3 Alkaline Stress Corrosion Cracking Services

5.6.3.1 Alkaline Carbonate Service

Carbonate presence in an aqueous alkaline environment containing H_2S, CO_2, and tensile stress (residual or applied) may lead to ACSCC in CS and low-alloy steels. Carbonate cracking has been observed in overhead streams in Fluid Catalytic Cracking Units (FCCUs), downstream wet gas compression system, sour water system and process water-handling equipment. Susceptibility to ASCC increases with increasing pH, carbonate concentration and tensile stress level. Areas of deformation resulting from cold forming or localized high residual stresses in weldments are more prone to ASCC.

5.6.3.2 Amine Services with any Concentration

Amine is used to remove acid gases (CO_2 and H_2S) from hydrocarbon gas streams. It is recognised that corrosion is not caused by amine itself but the result of the dissolved gases such as CO_2, H_2S and amine degradation products. Amine service with any concentration shall be treated as severe service.

5.6.3.3 Caustic Services with any Concentration

CS and SS can experience localized caustic concentrations that can cause caustic SCC in the aqueous phase with caustic concentrations of as low as 50 to 100 ppm in the bulk solution. Therefore, caustic service with any concentration shall be considered as severe service.

5.6.4 Ammonium Bisulphide (NH_4HS) with Concentration > 2 wt%

Ammonium bisulphide (NH_4HS) corrosion can occur in H_2S-dominated alkaline sour waters typically found in refinery services such as the Reactor Effluent Air Cooler (REAC) systems of hydro-processing units, sulphur recovery unit etc. For CS and low alloy material, sour water corrosion is mild to negligible when the NH_4HS concentration is $\leqslant$ 2 wt% and the velocity is $\leqslant$ 6.1 m / s (20 ft / s), however, corrosion rate increases rapidly above 2 wt% of ammonium bisulphide (NH_4HS) and strict velocity limits are required to mitigate against erosion-corrosion. Presence of cyanides at elevated pH can further aggravate the hydrogen penetration onto the steel which increases susceptibility to SSC. In addition, welds in DSS can be susceptible to SSC, in presence of ammonium bisulphide (NH_4HS), therefore it is considered as severe service condition.

All parties consent to this document being signed electronically -PT&CS/GP/INT/2021/3344

5.7 Damage Mechanisms of Materials in Severe Service

5.7.1 Damage Mechanisms

The following section describes the common cracking damage mechanisms that may occur for different material types in the severe service environments. A summary of these is given in Table 5.1.

Table 5.1 List of Damage Mechanisms

Severe Service Environment	Material				
	CS	Austenitic SS	Martensitic SS	DSS / SDSS	Nickel Alloy
Sour Service / Wet H_2S	HIC / SWC SOHIC SSC / SZC	CLSCC (Note 1)	HIC / SWC SOHIC SSC / SZC	CLSCC Note 1 SSC GHSC	SSC SCC (Note 5)
Amine / Carbonate	ASCC ACSCC	ASCC (Note 2) SSC GHSC	ASCC SSC GHSC	ASCC SSC GHSC	-
Caustic	CSCC	CSCC	CSCC	CSCC	CSCC (Note 3)
Ammonium Bisulphide	HIC / SWC SOHIC SSC / SZC	Note 4	HIC / SWC SOHIC SSC / SZC	SSC SCC	(Note 4)

Notes:

1. ASS and DSS / Super DSS (SDSS) is susceptible to CLSCC / SSC in sour service / wet H_2S environments dependent on the concentration level of chlorides as well as other variable limits. Further parameters are given in NACE MR0175 / ISO 15156-3.
2. ASS is prone to pitting corrosion in presence of heat stable amine salts above the temperature of 136 °C (dependent on the type of amine; typically, MDEA)
3. CSCC is applicable to nickel-based alloys only at temperatures above 300 °C.
4. ASS and nickel-based alloys in ammonium bisulphide (alkaline sour water) are more resistant to stress corrosion cracking depending on the concentration and velocity. Titanium is also an option as per API 571, however, the risk of hydriding must be considered.
5. Certain grades of nickel alloys are prone to SSC and SCC if elemental Sulphur is present along with H_2S. Refer to NACEMR0175 / SIO 15156-3 for material grades that are resistant to elemental sulphur in wet H_2S service.

All parties consent to this document being signed electronically -PT&CS/GP/INT/2021/3344

5.7.2 Upstream Oil & Gas Production - Damage Mechanisms

Wet H_2S is identified as the primary severe service threat associated with upstream oil and gas facility.

For carbon and low alloy steels, MR0175 / ISO 15156-2 mandates consideration of the following types of cracking risk associated with sour service / wet H_2S service:

a. SSC;

b. HIC;

c. SWC;

d. SOHIC;

e. SZC.

For prevention of SSC, it is recommended that requirements listed for region 1 to region 3 for $pH_2S \geq 0.05$ psi under section 7.1.2 of NACE MR0175 / ISO 15156-2 to be adopted to provide some level of safeguard against this type of cracking threat. Requirements identified to comply with section A.2 of NACE MR0175 / ISO 15156-2 are not particularly onerous and will give some reassurance given uncertainty in levels of H_2S detected in well tests. SZC is rarely a threat for mild sour applications and is not deemed a credible threat for region 0.

HIC and SWC is the primary cracking threat in all the regions including where partial pressure of H_2S < 0.3 kPa (0.05 psi). This will be safeguarded against by either selection of Z-quality HIC resistant grade of steel with low sulphur and phosphorus, or by necessary HIC testing for partial pressure $H_2S \geq 0.05$ psi.

SOHIC mainly occurs in spiral welded pipe and HFW pipe and to mitigate risk of SOHIC, spiral welded and HFW pipes shall not be permitted to be used in severe service applications.

For CRAs, the following types of cracking risk need to be considered associated with sour service / wet H_2S service according to NACE MR0175 / ISO 15156-3:

a. SSC of martensitic, ferritic and precipitation hardened stainless steels;

b. SCC;

c. GHSC.

To mitigate risk of SSC and SCC, selection of CRA shall be as per the latest version of NACE MR0175 / ISO 15156-3.

Amine Stress Corrosion Cracking (ASCC) and Caustic Stress Corrosion Cracking applicable to upstream oil & gas units (i.e. LNG / SRU units) are excluded from the scope of this Specification.

5.7.3 Downstream Refinery Environments- Damage Mechanisms

In downstream refinery environment, material is susceptible to hydrogen blistering, HIC, SOHIC, SSC or carbonate cracking. Cracking risk is governed by the severity of the process environment as applicable to the type of damage mechanism.

To mitigate risk of SSC, selection of material shall be as per the latest version of NACE MR0103 / ISO 17945. Safeguarded against HIC / SOHIC is achieved by either selection of Z-quality or HIC resistant grade of steel with low sulphur and phosphorus, or by necessary HIC testing. To mitigate alkaline stress corrosion cracking (amine, caustic, and carbonate), Post Weld Heat Treatment (PWHT) shall be applied as per the latest version API RP 571 / NACE SP0472 as applicable.

All parties consent to this document being signed electronically -PT&CS/GP/INT/2021/3344

5.8 Requirements for Materials in Severe Services

5.8.1 Sour Service / Wet H_2S Service

Strict material and fabrication control are required to reduce the propensity of damage in sour service / wet H_2S service applications. The materials selection, chemistry control, PWHT, and testing requirement shall be determined by applicable damage mechanisms and are detailed in the following sections of this Specification:

a. Section 6 covers general requirements applicable to sour service / wet H2S service and applies for both upstream oil and gas production systems and downstream refinery environments

b. Section 7 addresses the requirements applicable only to upstream oil and gas production systems

c. Section 8 addresses the requirement applicable only to downstream refinery environment.

5.8.2 Severe Service

Severe services applicable to downstream environment includes alkaline stress corrosion cracking and section 8 covers the applicable requirement to mitigate alkaline stress corrosion cracking (amine, caustic, and carbonate).

5.8.3 Other Severe Service Requirements

Requirements for Non-metallic in severe service is addressed in Section 9 of the Specification and material testing requirements are addressed in Section 11.

6 GENERAL REQUIREMENTS FOR SOUR SERVICE / WET H_2S SERVICE

Requirement applicable to product forms, i.e. plates, pipes, forging etc., are discussed in following sections and shall be applicable to both upstream oil and gas production systems and downstream refinery environments. ASME material specifications (in place of ASTM specs) for wetted parts are acceptable, where equipment is ASME Code-Stamped.

6.1 Carbon Steel

6.1.1 General Requirements

The following general requirements shall be applicable for the application of CS components in sour service / wet H_2S service:

a. “Carbon Steel” (CS) shall be interpreted as including micro-alloyed steels and low alloy steels for the purpose of this Specification;

b. Cast irons and ferritic ductile (nodular) iron shall not be used for pressure-retaining parts;

c. Steel grades with deliberate sulphur additions and other types of “free-machining” steel grades shall not be used;

d. All materials shall be made in a basic oxygen or electric arc furnace and shall be fully killed and vacuum degassed;

e. All materials shall be supplied in the normalized, or normalized and tempered condition, Normalizing shall be carried out as a separate heat treatment.

All parties consent to this document being signed electronically -PT&CS/GP/INT/2021/3344

Q&T steel maybe acceptable by Company approval, provided SSC and impact testing results comply with the requirement of this Specification. Hot finished material shall be subject to COMPANY approval.

f. Where the process duty is such that a wet gas environment exists in part of the vessel and multiphase (oil, gas, water) system exists in another part of the same vessel, the material of construction for the entire vessel shall be suitable for the more severe sour conditions;

g. The following formula shall be used to calculate the Carbon Equivalent (CE) (all values are wt%):

$$CE = \%C + \%\frac{Mn}{6} + \frac{\%Ni + \%Cu}{15} + \frac{\%Cr + \%Mo + \%V}{5}$$

h. Chemical analysis results and CE shall be reported in a Certified Material Test Report (CMTR). The reported chemical analysis shall include all elements required by the applicable ASTM standard, this Specification, and the elements used for the determination of CE;

i. Substitution of grades other than those specified in this Specification may be permitted by COMPANY approval. Such Substitution shall be documented and submitted in the formal format, i.e. a technical query / concession request;

j. The technical requirements of this Specification shall apply equally to off-the-shelf and stock materials or equipment as they do to items manufactured to order. Compliance shall be evidenced by appropriate certified and traceable documentation including Certified Material Test Reports, Inspection Reports etc.

6.1.2 Plates for Vessels and Equipment

6.1.2.1 Steelmaking and Processing

Steel shall be fully de-oxidised and produced by basic oxygen or electric arc furnace. The steel-making practice shall control the quantity and shape of non-metallic inclusions by vacuum degassing or calcium treatment. Non-metallic inclusions shall possess a rounded morphology. The casting, rolling and heat treatment processes shall be such that a homogeneous microstructure is obtained. The ASTM E112 grain size number shall be 7 - 10.

The material MANUFACTURER or SUPPLIER shall submit the following information in its quotation:

a. Steel-making route, deoxidization and desulphurisation practice, inclusion shape control method, use of vacuum degassing;

b. Requirement of ASTM E45 for inclusion content and sample reports of previous production / supply;

c. Casting route, segregation control procedures, rolling reduction;

d. Methods for minimising “Centre Line Segregation”;

e. Procedures for assessing the degree of banding or orientation of microstructures as described in ASTM E1268;

f. HIC test results from previous similar production;

g. Heat treatment details.

All parties consent to this document being signed electronically -PT&CS/GP/INT/2021/3344

6.1.2.2 Chemical Analysis

The plate material shall conform to the following chemistry requirements. In the case of discrepancy, product analysis shall be definitive.

Table 6.1 Element wt.% Maximum Chemistry Requirements for Plate Material

C	Mn	Si	S	P	Cr	Mo	Al	Cu	Ni	V	Nb	Ti	B
0.20	0.8 to 1.3	0.15 to 0.4	0.003 (Note 1)	0.01	0.3 (Note 2, 3)	0.12 (Note 2, 3)	0.05	0.3 (Note 3)	0.3 (Note 3)	0.02 (Note 4)	0.02 (Note 4)	0.02	0.0005

Notes:

1. For downstream refinery applications, S=0.010 is acceptable for “NOT” and “LOW” process severity categories.
2. The sum of Cr + Mo shall not exceed 0.3%.
3. The sum of Ni + Cr + Mo + Cu shall not exceed 0.7%.
4. The sum of V + Nb shall not exceed 0.02%.

Oxygen analysis shall be provided for information for checking effectiveness of de-oxidation practice. Where calcium treatment is used its content percentage shall be given for information and the Ca / S ratio shall be between 2 and 4.

The CE based on product analysis shall conform to following:

a. t ≤ 50mm (2 in), 0.43 maximum;
b. 50mm (2 in) < t ≤ 200mm (8 in), 0.45 maximum;
c. t > 200mm (8 in), 0.48 maximum.

6.1.2.3 Plate Grades

Plate shall be supplied in one of the following grades and metallurgical conditions:

a. ASTM A-516 (UNS K02403) up to and including Grade 70 in the normalised condition;
b. ASTM A-537 Class 1;
c. EN 10028-3 P275 and P355 in the normalised or normalised –rolled condition.

Plate in other metallurgical condition, such as quenched and tempered, shall be in conformance to 6.1.1e.

All plates shall have tensile strength of less than 585MPa (85,000psi).

6.1.2.4 NDE

All plates shall be subject to Ultrasonic Testing (UT) in a 75 mm grid pattern in accordance with ASTM A578 supplementary requirement S2.2 and with 100 mm^2 maximum defect area, or in accordance with BS EN 10160 level S2E2. Plates produced from coils are not permitted.

All parties consent to this document being signed electronically -PT&CS/GP/INT/2021/3344

6.1.2.5 HIC Requirement for Plates

HIC requirements for plate materials are specific to upstream and downstream process requirements and can be found in Section 7.1.2.1 and 8.1.2.2.1, respectively.

6.1.2.6 SSC / SOHIC Requirement for Plates

The equipment user shall consider the SSC / SOHIC / SZC testing of materials for applications where they consider the probability and potential consequences of failure make this justifiable.

6.1.3 Process Piping

6.1.3.1 General

Seamless CS pipe products should be specified for all environmental cracking services in order to avoid the need for hardness control and residual stress control on welded pipe products.

Note: If seamless pipe products are not available, such as might be the case for large diameter pipe products, the use of welded pipe products could be necessary.

For pipe made from plate, the requirement of Sections 6.1.2.1 to 6.1.2.4 shall be applicable.

6.1.3.2 Seamless Pipe to ASTM Specifications

Pipe shall be supplied to one of the following specifications and grades:

a. ASTM A106 Grade B;

b. ASTM A333 Grade 6.

The steel shall be fully killed and shall be produced by a low sulphur and low phosphorous refining process. Seamless hollows may be formed by extrusion or by rolling processes.

<u>Chemical Analysis</u>

Product chemical analysis shall be made on a minimum 2 pipes per lot (as defined in the applicable ASTM standard). Chemical analysis shall be in accordance with following restrictions as listed in Table 6.2.

Table 6.2 Element wt.% Maximum Chemistry Requirements for Process Piping

C	Mn	Si	S	P	Cr	Mo	Cu	Ni	V
0.23 (Note 1, 2)	1.4	0.3	0.010	0.02	0.3	0.12	0.2	0.4	0.02

Notes:

1. C shall be limited to 0.18% for upstream oil and gas production system.
2. The CE shall be a maximum of 0.43.
3. Microalloying elements (Nb, V, Ti, B) shall not be deliberately added.

All parties consent to this document being signed electronically -PT&CS/GP/INT/2021/3344

HIC and SSC Testing

HIC testing is not required for seamless pipe compliant with this section and with sulphur content 0.010 wt% or less. SSC testing of parent pipe is not required for seamless pipe complying with the requirements in this Section.

Mechanical Testing

Tensile testing shall be performed according to the product specification. Neither yield strength nor ultimate tensile strength shall exceed the specified minimum value by more than 20,000 psi. A through-thickness Vickers Hardness survey shall be performed at the same frequency as tensile testing in accordance with procedures meeting the requirements of ASTM E384, subjected to review and approval by the COMPANY.

6.1.3.3 Seamless Pipe to API 5L for Process Piping

Specifications and Grades

API 5L seamless pipe for process piping shall be supplied to API 5L PSL 2, with the amendments and clarifications in this Section.

Pipe shall be in delivery condition "NS" (normalised, normalised rolled / formed, or normalised & tempered) with maximum strength grade X52NS (or L360NS for ISO 3183). Pipe in other metallurgical condition, such as quenched and tempered, shall be in conformance to 6.1.1e.

Manufacturing

Manufacture, processing, pipe material characteristics, inspection and testing shall be as per API 5L, Annex H (PSL2).

Chemical Analysis

The maximum sulphur content is 0.003 wt% as required by API 5L Annex H, Table H.1.

Non-destructive Examination

Non-destructive Examination (NDE) shall be as per API 5L Annex K (Non-destructive inspection for pipe ordered for sour service / wet H_2S service and / or offshore service).

HIC and SSC Testing

HIC testing is not required for pipe complying with the limitation on sulphur content in this Specification. SSC testing of parent pipe is not required for pipe complying with the requirements in this Section.

Mechanical Testing

Mechanical test requirements shall conform with API 5L Annex H.

6.1.3.4 Welded Pipe to ASTM Specifications

Specifications and Grades

Welded pipe shall be supplied to one of the following specifications and grades:

a. ASTM A671 class 22 gr C60 and C65;

b. ASTM A672 class 22 gr C55, C60 or C65;

c. For downstream applications, especially for large diameter pipe, following killed & fine grain grades may be used, if prior approval from CONTRACTOR / COMPANY is obtained:

   i. ASTM A671 class 32 gr CC60 or CC65;

All parties consent to this document being signed electronically -PT&CS/GP/INT/2021/3344

ii. ASTM A672 class 32 gr C 55, C60 or C65.

Plate Processing

For pipe made from plate, the requirement of Sections 6.1.2.1 to 6.1.2.4 shall be applicable.

Pipe-welding

The welding process shall be longitudinal submerged arc-welding, one pass per side. Longitudinal seam High Frequency Welded (HFW) or spiral-weld pipe shall not be used.

Any welding processes may be used for tack-welding provided that all tack welds are fully re-melted. Weld repair is only acceptable if a weld repair procedure has been qualified. The Weld Repair Procedure Qualification test (WRPQ) shall demonstrate specified hardness levels meet at all locations in weld, HAZ and parent material.

Pipe Expansion and Sizing

Cold–expansion or cold-sizing is permissible. The maximum sizing ratio shall not exceed 0.012 unless the pipe is subsequently heat-treated (either normalised or stress-relieved).

Pipe Non-destructive Examination

The weld seam shall be examined along 100 % of the length for longitudinal and transverse defects by one or more of the following:

a. Automated UT;

b. Radiography.

If automated UT is used, the section of the seam weld at pipe ends that cannot be inspected, must be examined by manual UT or radiography. The pipe end face (bevel) shall also be examined by Magnetic Particle Testing (MPT) or Wet Fluorescent Magnetic Particle Testing (WFMT).

Chemical Analysis

Chemical analysis of the plate shall comply with Section 6.1.2.2 of this Specification. Product chemical analysis shall be performed once per heat, either on plate or on pipe. Product analysis shall confirm with Section 6.1.2.2 of this Specification.

HIC Testing of Pipe

HIC requirements for welded pipe are specific to upstream and downstream process requirements and can be found in Section 7.1.3.1 and 8.1.2.3.1, respectively.

SSC Test

Cross-weld SSC tests shall be performed on each MPQ pipe in accordance with APPENDIX A2. No further SSC tests are required.

Mechanical Test Requirements

Tensile and weld bend tests shall be performed to the method and frequency in accordance with ASTM A671, or A672. Neither yield strength nor ultimate tensile strength of the parent material shall exceed the specified minimum values by more than 20,000 psi.

Maximum Hardness

A Vickers Hardness survey (HV 10) shall be performed at the same frequency as tensile testing. Survey shall include a cross-weld survey in accordance with APPENDIX A4 (double V and double bevel welds), and a through-thickness survey at the 6 O'clock position relative to weld seam. Hardness requirement for upstream and

All parties consent to this document being signed electronically -PT&CS/GP/INT/2021/3344

downstream refinery application shall be as per NACE MR0175 / ISO 15156, and NACE MR0103 / ISO 17945 / NACE SP0472 as applicable.

Manufacturing Procedure Qualification

The following tests, Table 6.3, apply to the manufacturing procedure qualification pipe and are additional to any tests required by the applicable ASTM specification. Data from previous production of the same pipe dimensions and grade through the same process route are acceptable for MPQ.

An MPQ pipe will qualify one combination of steel source, pipe-mill, process route, pipe size (thickness x diameter) and grade only, however it will qualify any number of steel heats or production batches. With COMPANY approval only, pipes with similar dimensions may be treated as equivalent for the purpose of MPQ testing in order to limit the number of tests.

In the case of pipe sourced from a stockholder, one pipe per MANUFACTURER, size and grade shall be nominated as the MPQ pipe. MPQ pipe shall be a minimum 8 m in length.

Table 6.3 MPQ List of Tests for Welded Pipe

Test / Inspection	Number	Locations	Notes
Automated UT; and / or Radiography of weld seam	1	100 %	
MPT / WFMT of weld seam (internal and external)	1	100 %	
Product chemical analysis	1	Pipe end, 6 O'clock	
Weld bead chemical analysis	1	Pipe end	
HIC test	2 sets	One set at each pipe end	Three test pieces per set, APPENDIX A1
SSC test, transverse weld	2 sets	One set at each pipe end	Three test pieces per set, APPENDIX A2
Transverse weld macro-section and hardness survey	5	Pipe ends & 2 m intervals	APPENDIX A4 (Note 1)
Transverse body macro section and through-thickness hardness survey	5 sets	Pipe ends & 2 m intervals, at 3, 6, 9 O'clock positions	HV10 (Note 1)

Notes:

1. Hardness requirement for upstream and downstream refinery application shall be as per NACE MR0175 / ISO 15156, and NACE MR0103 / ISO 17945 / NACE SP0472 as applicable.

Certification

Certified Material Test Reports (CMTR's) in accordance with ASTM A530, section 23 is required for pipe to ASTM standards. CMTRs shall include pipe-mill, plate–mill and steel-mill certificates with clear traceability for each piece.

All parties consent to this document being signed electronically -PT&CS/GP/INT/2021/3344

6.1.3.5 Welded Pipe to API 5L for Process Piping

Specification and Grades

Manufacture, processing, pipe characteristics inspection, and testing shall be as per API 5L, Annex H (PSL2 pipe ordered for sour service / wet H_2S service) as supplemented by this Specification.

Welded API 5L pipe for process piping shall be in either:

a. In delivery condition "NS" (normalised, normalised rolled / formed, or normalised & tempered) with maximum strength grade X52NS (L360NS);

b. In delivery condition "MS" (thermo-mechanically rolled) with maximum strength grade X65MS (L450MS).

Pipe in other metallurgical condition, such as quenched and tempered, shall be in conformance to 6.1.1e. The maximum sulphur content is 0.002 wt% for "NS" grades and 0.003 wt% for "MS" grades as required by API 5L Annex H, Table H.1.

Pipe-welding

The welding process shall be longitudinal submerged arc-welding, one pass per side. Longitudinal seam HFW or spiral-weld pipe shall not be used.

Approved welding processes may be used for tack-welding provided that all tack welds are fully re-melted. Weld repair is only acceptable if a weld repair procedure has been qualified. The WRPQ test shall demonstrate hardness levels of less than 248 HV10 or 22 HRC at all locations in the weld, HAZ, and parent material.

Expansion and Sizing

Pipe may be cold-expanded or cold-sized as allowed by API 5L, Annex H.

Non-destructive Examination

NDE shall be as per API 5L Annex K (Non-destructive inspection for pipe ordered for sour service / wet H_2S service and / or offshore service).

HIC Testing of Pipe

HIC requirements for welded pipe are specific to upstream and downstream process requirements and can be found in Section 7.1.3.1 and 8.1.2.3.1, respectively.

Manufacturing Procedure Qualification

MPQ tests are required as API 5L Annex B and Annex H. SSC testing as described in API 5L Appendix H, Table H.3 is required.

An MPQ pipe will qualify one combination of steel source, pipe-mill, process route, pipe size (thickness x diameter), and grade only, however, it will qualify any number of steel heats or production batches. With COMPANY approval only, pipes with similar dimensions may be treated as equivalent for MPQ testing to limit the number of tests.

Data from the previous production of the same pipe dimensions and grade through the same process route are acceptable for MPQ. In the case of pipe sourced from a stockholder, one pipe per supplier, size, and grade shall be nominated as the MPQ pipe.

Hardness

The maximum hardness requirement of parent pipe, seam weld, or HAZ is specific to the process and can be found for upstream and downstream in Section 7 and section 8 respectively.

All parties consent to this document being signed electronically -PT&CS/GP/INT/2021/3344

6.1.4 Linepipe

Linepipe may be seamless pipe or longitudinal submerged arc-welded pipe as described in this section. Longitudinal seam HFW or spiral-weld pipe shall not be permitted to be used.

6.1.4.1 Seamless Pipe to API 5L for Transmission Pipeline

Seamless linepipe shall confirm to AGES-SP-10-001 and API 5L PSL 2 + Annex H. In addition to the requirements of AGES-SP-10-001: the maximum sizing ratio in cold sizing shall not exceed 0.012 for sour service / wet H_2S service pipe.

The maximum hardness of parent pipe shall be 230 HV10 or shall be controlled to achieve 248 HV10 for weld, HAZ, and parent material for field joints.

No HIC or SSC testing is required.

6.1.4.2 SAW Pipe to API 5L for Transmission Pipeline

Linepipe shall comply with AGES-SP-10-001 as supplemented by this Specification. The maximum strength grade shall be X70 / L485.

Pipe-forming, welding, expansion, and sizing shall comply with Section 6.1.3.5 of this Specification.

<u>Non-destructive Examination</u>

NDE shall be as per Annex H and Annex K of API 5L

<u>Manufacturing Procedure Qualification</u>

The MPQ test regime shall be identical to “first-day production” tests in AGES-SP-10-001. SSC tests of the seam weld are required in MPQ testing for all pipe, regardless of the strength grade of the parent pipe material.

<u>Hardness</u>

The maximum hardness of parent pipe, seam weld, or seam-weld HAZ shall be 230 HV10 or shall be controlled to achieve 248 HV10 for weld, HAZ, and parent material for field joints.

<u>HIC Testing of Pipe</u>

For each pipe size (diameter x wall thickness):

a. One pipe shall be tested from each of the first three heats of pipe produced;

b. One pipe shall be tested from every subsequent ten heats;

c. COMPANY Representative shall have the option to select the heats and the pipes for testing;

d. For each pipe sampled, one set of HIC tests shall be taken from within 200 mm of each end;

e. HIC testing shall be performed according to APPENDIX A1 of this Specification;

f. SSC testing shall be performed for each MPQ pipe required; no further SSC test required.

6.1.5 Forgings

<u>General Requirements for Forgings</u>

This section applies to conventional forgings produced from billet, bar, or similar feed-stock. Forged products typically include flanges and other pipe-fittings. Feedstock shall be prepared to relevant ASTM standards.

All parties consent to this document being signed electronically -PT&CS/GP/INT/2021/3344

Chemical Analysis

The maximum sulphur content shall be the lower of:

a. The sulphur content in the product specification;

b. 0.02 wt%.

Carbon content shall be 0.23 % maximum.

For items which are to be welded, the maximum carbon equivalent shall be the lower of:

a. The CEV in the product specification;

b. 0.43.

In case of dispute, the product check chemistry shall be definitive.

Specification and Grades

Forgings for pressure containment shall be in accordance with one of the following standards and grades:

a. ASTM A105;

b. ASTM A182 F11 cl 1 or F22 cl 1;

c. ASTM A350 LF2;

d. ASTM A765 (grades I, II or IV);

e. ASTM A694 (grades F42 through F65, for use with pipelines);

f. MSS SP-44 gr F42 to F65.

For ASTM A350 LF2 forgings, microalloying elements (Nb, V, Ti, B) shall not be deliberately added.

For ASTM A105 forgings, the hardness shall be no more than 187 HBW. For ASTM A350 LF2 forgings, the hardness shall be no more than 197 HBW.

Non-destructive Examination

All forgings for pressure parts shall be Magnetic-particle Tested (MPT) 100 % on forged or extruded surfaces in accordance with MSS SP 53 or equivalent procedure approved by COMPANY. Reduced extent of 10% MPT may be applied for forgings for other applications, such as valve stems, pump shafts, etc., if approved by COMPANY.

HIC / SSC Testing

No HIC / SSC testing is required for conventional forgings that comply with the above compositional limits.

Weld repair

COMPANY approval shall be required for any repair welding. Repair by welding shall only be allowed according to an approved WRPQ and in accordance with the product specification. The maximum hardness in the WRPQ test shall be:

a. 210 HV10 in the weld metal;

b. 248 HV10 or the maximum hardness allowed for the grade if lower, in the HAZ and parent material.

PWHT is required after weld repair.

All parties consent to this document being signed electronically -PT&CS/GP/INT/2021/3344

Production hardness testing shall be performed on each weld repair. Testing may be performed with portable comparison testers in accordance with ASTM A833. Hardness measuring devices for production weld hardness testing shall comply with NACE MR0103 / ISO 17945, Annex B. A test shall consist of three readings, and the mean value shall be the test result.

Certification

A CMTR is required, containing as a minimum:

a. Traceability to original steel manufacturer, plant, cast and batch numbers;

b. Heat treatment condition;

c. Tensile and hardness results;

d. Chemical analysis results;

e. Details of any repair welding;

f. Results of NDE;

g. Any other data required by the product specification.

6.1.6 Castings

General requirements for all castings

All welds shall be PWHT to reduce the residual stresses. This requirement also applies to the weld repair of defects, irrespective of size. For items which are to be welded, the maximum carbon equivalent shall be the lower of:

a. The CEV in the product specification;

b. 0.43.

Chemical Analysis

The chemical analysis shall be according to the specific grade, with the additional limitations as shown in Table 6.4. In case of dispute, product analysis values shall be definitive.

Table 6.4 Element wt.% Maximum Chemistry Requirements for Castings

C	Mn	S	P
0.21	1.35	0.02	0.025

Specification and Grades

Castings for pressure containment shall be in accordance with one of the following standards and grades:

a. ASTM A216 Grade WCB or WCC;

b. ASTM A217 Grade WC6 or WC9;

c. ASTM A352 Grade LCB or LCC.

All parties consent to this document being signed electronically -PT&CS/GP/INT/2021/3344

Hardness

See Sections 7.1.4 and 8.1.2.5 for specific requirements for upstream and downstream, respectively.

Non-destructive Examination

Castings shall be examined for surface and near-surface discontinuities by WFMT in accordance with MSS SP 53 or equivalent procedure approved by COMPANY. Castings shall be examined for internal defects by radiography in accordance with MSS SP 54 or equivalent procedure approved by COMPANY.

HIC / SSC testing

No HIC / SSC testing is required for cast material complying with the above composition limits.

Weld Repair

Weld repair of castings is only permitted when a weld repair procedure qualification has been performed. PWHT is required after weld repair.

Certification

A CMTR is required, containing as a minimum:

a. Traceability to original steel manufacturer, plant, cast and batch numbers;
b. Heat treatment condition;
c. Tensile and hardness results;
d. Chemical analysis results;
e. Details of any repair welding;
f. Results of NDE;
g. Any other data required by the product specification.

6.1.7 Clad Vessels and Equipment

Provided the CRA layer covers 100 % of the process-wetted surfaces so that no CS is exposed to the environment, the requirements for CS used as the substrate for a metallurgically clad corrosion-resistant alloy are as follows:

a. The substrate material shall comply with the hardness limitations in accordance with this Specification;
b. Weld Procedure Qualification Record (PQR), weld hardness limitations and testing shall be as Section 6.1.8 of this Specification. PWHT is required only:
    i. If required to meet the hardness requirements;
    ii. To comply with Design Code requirements.
c. Equipment that has been PWHT according to Code after the CS fabrication does not require a further PWHT after weld-overlay with 100 % coverage;
d. HIC testing is not required for substrate material.

Where the CRA layer has partial coverage, and any part of the CS substrate material is exposed to the sour environment, then substrate material shall comply with all requirements of this Specification as if it was in direct exposure to the sour environment. PWHT is mandatory for welded vessels in this case.

All parties consent to this document being signed electronically -PT&CS/GP/INT/2021/3344

6.1.8 Fabrication and Welding of Carbon and Low Alloy Steels

6.1.8.1 General

This section applies to the fabrication of vessels and of piping systems both in the shop and on the plant. The requirements also apply to welding of internal and external attachments to the pressure boundary components. This section is NOT applicable to seam welding and manufacture of welded pipe.

The inside weld surfaces of pressure equipment such as vessels, exchangers, and compressor casings fabricated from plates shall have the weld reinforcement ground smooth and as nearly flush as possible to reduce stress risers, remove built-in notches, undercuts, etc. to facilitate NDE examination.

Discontinuity generating profiles, such as welds overly reinforced with high crowns or with the tops of crowns ground flat and having sharp edges or welds with rough bead profiles, shall be corrected. The remains of any internal temporary attachments, line-up clamps, backing bars, or arc strikes shall be ground flush with the base metal and inspected with MPT / WFMT before preparation for shipment.

6.1.8.2 Forming

Forming requirements can be found in the specific sections for upstream and downstream, 7.1.5.1 and 8.1.2.7, respectively.

6.1.8.3 Stamping

Identification stamping using low-stress (dot, vibratory, and round V) stamps is allowed. Conventional sharp V stamping is allowed in low-stress areas, such as the outside diameter of flanges. Sharp V stamping is not allowed in high-stress areas unless the item receives a subsequent thermal treatment to reduce the hardness to meet the maximum hardness requirement for the base metal specified.

6.1.8.4 Welding of Vessels and Piping Systems

This section applies to welding of CS pressure vessels, equipment, and process piping systems. Welding consumables shall comply with International Standards, i.e. AWS / ASME SEC IIC / EN / ISO. Unless specified otherwise in other project specifications, a minimum of EN 10204 3.1 certifications is required for all welding consumables. The use of austenitic welding consumables to avoid PWHT is prohibited. Socket welding shall not be permitted in sour service. The requirements of COMPANY welding specifications and project specification will be applicable in addition to the requirement of this Section.

6.1.8.4.1 Acceptable Welding Processes

Pressure retaining welds and attachments to the pressure boundary components shall be made with the following welding processes only:

<u>Shielded Metal Arc Welding (SMAW)</u>

Low hydrogen electrodes (less than 5 ml / 100 g of metal deposited) shall be used. Open butt welds made with a SMAW root pass shall be backgouged and rewelded. Open root butt welds that are not accessible for backgouging shall be made with the Gas Tungsten Arc Welding (GTAW) process.

<u>Submerged Arc Welding (SAW)</u>

Classification EH14 shall not be used. The name-brand flux and the name-brand wire combination used for the welding procedure qualification shall be used for production welding. Active fluxes and alloy adding fluxes, including fluxes that add manganese shall not be used. Only basic fluxes shall be used.

All parties consent to this document being signed electronically -PT&CS/GP/INT/2021/3344

Gas Metal Arc Welding (GMAW)

Classification ER70S-G shall not be used. For equipment and piping, GMAW shall only be used in the spray transfer mode, and only for external attachment welds in the flat or rotated flat position.

Flux Cored Arc Welding (FCAW)

a. All welds shall be made with a shielding gas (gas-shielded FCAW) and the self-shielded FCAW process shall not be used;

b. Electrodes larger than 1.2 mm diameter shall not be used;

c. Classifications EXXT-G and EXXT-GS shall not be used;

d. For equipment, following additional requirement shall be applicable:

   i. FCAW shall only be used in the spray transfer mode;

   ii. Shall not be used for butt or nozzle welds on the pressure boundary (may be used for internal or external attachment welds onto the pressure boundary).

Gas Tungsten Arc Welding

Classification ER70S-6 shall not be used for the GTAW process. ER70S-2 or ER70S-3 may be used.

6.1.8.4.2 Welding Procedure Qualification Record (WPQR)

General Requirements

PQR shall be as per the appropriate design & welding code as specified in applicable COMPANY specification, and product specification, with the amendments and additions in this Specification. The qualifications and all associated testing shall be certified to type 3.2 EN 10204 (3rd party verification required). The preheat used for PQR shall not be greater than that used for production welding. Where repair welds may be performed in fabrication, both weld and weld repair procedures shall be qualified separately. Where applicable, SSC testing may be specified by COMPANY.

Macro Examinations and Hardness Survey

Two macro sections shall be taken from the completed joint. The specimens shall be polished, etched, and examined under a magnification of 5X to ensure freedom from defects in accordance with ASME Section IX or equivalent International Standard.

Following satisfactory macro examination, a Vickers hardness survey using a 10 Kg load (HV10) shall be made on the macro specimens. The general procedure shall be in accordance with ASTM E384 and NACE SP0472 for downstream and NACEMR0175 / ISO15156-2 for upstream applications.

APPENDIX A4 of this Specification shows suitable hardness survey layouts for typical weld designs. Survey layouts for weld repair qualifications and other weld geometries shall follow the same principles according to NACE MR0103 / ISO 17945 and NACE MR0175 / ISO 15156-2 as applicable.

Maximum Hardness

See Sections 7.1.5.2 and 8.1.2.8 for specific requirements for upstream and downstream, respectively.

Micro Examination

The microstructure of the base metal, HAZ, and weld deposit shall be examined at 100x magnification. An untempered martensitic structure shall not be acceptable.

All parties consent to this document being signed electronically -PT&CS/GP/INT/2021/3344

6.1.8.4.3 Preheat and Heat Input

The base metal and inter pass temperature of all welds shall be maintained at not less than the minimum specified preheat temperature until the weld is completed. If the welding process is terminated before completion of the weld, partially completed welds shall be examined with MPT and the preheat shall be re-established before restarting welding.

Preheat and inter pass temperature shall be sufficient to achieve the specified hardness levels in the weldments. The preheat used in production shall be no lower than that in the applicable PQR. The heat input for production welds based on hardness-tested PQRs shall be monitored and controlled at a level not significantly less than that used for the PQR.

6.1.8.4.4 Post Weld Heat Treatment

Wherever possible, PWHT shall be performed in a furnace. Heating methods other than furnace shall require approval by the COMPANY. Unless required by code, PWHT is not required for CS equipment which is fully clad with CRA or the clad portion of CS equipment which is partially clad CRA. Based on severe service, PWHT shall comply with the requirement of this Specification in addition with any code requirements. PWHT requirement specific to upstream and downstream segments are covered in Section 7.1.5.3 and Section 8.1.2.10 respectively.

6.1.8.4.5 Attachments

These requirements apply to welding of all temporary or permanent internal or external attachments made to the pressure containing components. All attachment welds shall be two passes minimum. All internal / external attachments shall be welded to the main component using full penetration welds unless approved otherwise by COMPANY. Fillet welding can only be used where fillet welding is the only option e.g. saddles / doubler pads. Pre-heat shall be calculated based on the base metal thickness and chemistry, according to the ruling Specification or Code. Also, the base metal shall be preheated sufficiently to ensure that the required preheat temperature has been achieved through the full material thickness. The preheat temperature shall be measured on the side of the member to which the attachment weld is to be made. The internal weld surfaces shall be made as smooth and as nearly flush as possible to reduce stress risers, remove built-in notches, and to facilitate MPT / WFMT.

6.1.8.4.6 Production Weld Testing

Production weld hardness testing is required for all weld types in sour service / wet H_2S service, no exemptions are permitted (specifically, the exempt cases in NACE SP0472 shall be tested). Production welds hardness testing shall be performed using portable comparison testers in accordance with ASTM A833 or equivalent. Hardness measuring devices for production weld hardness testing shall comply with NACE MR0103 / ISO 17945, Annex B. Where practical, hardness checks shall be made on the process-side. Otherwise, checks shall be made on the opposite side. Hardness checks shall be made on every weld repair. Hardness checks shall include attachment welds and fillet welds where practical. A test shall consist of three readings, and the mean value shall be the test result. A reduced frequency of hardness checks is permitted for shop fabrications where PWHT is achieved by furnace treatment, see the following table.

All parties consent to this document being signed electronically -PT&CS/GP/INT/2021/3344

Table 6.5 Production Weld Hardness Testing Frequency Requirements

Components	Weld type	Furnace PWHT	Field / Local PWHT
Pressure vessels, other pressure equipment, and tanks	Main seam welds	Test each weld seam, minimum of 1 test per seam, and 1 additional test every 3 m length	Test each weld seam, minimum of 1 test per seam, and 1 additional test every 3 m length
	Nozzle or man-way weld	1 Test per nozzle	Each weld
	Attachment welds	1 Test per separate weld procedure	Each weld
Exchanger tubes	-	5 % of welds, minimum 1 per furnace batch	Each weld (Note 1)
Piping, flanges, pipe fittings	-	5 % of welds, minimum 1 per furnace batch	Each weld
Valve bodies & bonnets, pump casings		5 % of welds, minimum 1 per furnace batch	Each weld
All components	Weld repairs	Each weld	Each weld

Notes:

1. Each weld is not applicable for tubesheet to tube field weld joints.

The Party responsible for hardness testing (e.g. SUPPLIER or SUB-CONTRACTOR) shall advise the schedule of testing to CONTRACTOR or COMPANY in reasonable time and allow CONTRACTOR or COMPANY representative to witness the testing.

The results of tests shall be included in the Databooks for equipment or process unit.

6.1.8.4.7 Non-destructive Examination

The coverage of NDE shall be as described below. Unless stated otherwise, these apply to all pressure containment welds. This includes butt, nozzle, and attachment welds, including both sides of the attachment for internal fillet welds. Brushing, or grinding shall be performed to provide a suitable surface for MPT / WFMT. Removal of slag, spatter, arc strikes, and heat treatment oxides shall be completed prior to performing NDE.

All parties consent to this document being signed electronically -PT&CS/GP/INT/2021/3344

Table 6.6 NDE Coverage for Pressure Containment CS Welds

Item	Wall Thickness (mm)	NDE Method		
		Visual	WFMT	RT / UT
Pressure Vessels and Equipment	≤ 50	100 %	100 % (Note 1)	100 % (Note 1, 2)
	> 50			100 % (Note 1, 2, 3, 4)
Piping and Piping Systems	All thicknesses			100 % (Note 1, 2)

Notes:

1. Examined after final PWHT.
2. UT shall be used when RT is impractical.
3. Time of Flight Diffraction (TOFD) UT method shall be used.
4. To be performed both before and after final PWHT.

TOFD examination shall be in accordance with ASME V article 4 and ASME BPVC code case 2235. For welds whose configuration precludes radiography such as fillet welds or internal parts, UT examination shall be done instead of radiography and the examination report shall be included on the dossier. The acceptance criteria and aspects of NDE for piping and vessels shall be in accordance with COMPANY welding & NDE specification or project Specification as applicable.

6.1.8.5 Welding of Transmission Pipelines

Pipeline welding shall be in accordance with COMPANY welding specification and the additional requirements of this Specification. PWHT requirement shall be as per applicable code such as ASME B31.4 or ASME B31.8.

<u>Weld Procedure Qualification</u>

PQR and WRPQ tests shall use a pipe with CEV not more than 0.01 point below the maximum allowed in the linepipe order specification, or pipe with the maximum CEV delivered for the project.

Hardness requirements shall be as specified by COMPANY welding specification. Where SAW pipe is used, the hardness checks shall include measurements at the intersection of the seam weld and girth weld. Alternative hardness limits are acceptable on a case by case basis, provided these are qualified by SSC testing of weld procedures and are approved by COMPANY. SSC tests shall be performed as part of PQR testing using cross-weld four-point specimens, APPENDIX A2. Acceptable SSC test results are required. Where there is a difference in essential variables and the Code requires separate PQR and WRPQ to be performed for the welds to pipe bends or other pipeline components, then separate SSC tests are also required. The same maximum hardness limits and SSC testing requirements apply as for the qualification of pipe to pipe welds.

All parties consent to this document being signed electronically -PT&CS/GP/INT/2021/3344

6.2 Stainless Steels & Other CRA

6.2.1 General

The manufacture, welding and the properties of Stainless Steel (SS) and Corrosion Resistant Alloys (CRAs) shall comply with the requirements of NACE MR0175 / ISO 15156-3 or NACE MR0103 / ISO 17945 (including all heat treatments and hardness limits) as applicable, with any modifications and additional requirements in this Specification. Specific requirements for upstream and downstream services are given in Sections 7.2 and 8.2, respectively.

6.2.2 Austenitic Stainless Steels

ASS shall be in the solution-annealed and quenched, or solution-annealed and thermally stabilized condition, and shall be free of cold-work intended to enhance their mechanical properties. ASS containing lead or selenium for the purpose of improving machinability is not allowed. Molybdenum disulphide shall not be used with ASS.

Minimum material grade for sour service / wet H_2S service applications shall be SS316 / SS316L unless approved by COMPANY.

6.2.3 Martensitic Stainless Steel

Martensitic SS for pressure-containing items shall be used in accordance with the following Table 6.7. This includes the pressure-containing casings for pumps and compressors (forgings only, martensitic SS shall not be used for castings), or the body and bonnet of a valve. The same limitations shall be used for critical load-bearing items including valve stems and shafts of rotating equipment. Company Approval required for deviation to the limits for the compressor but shall be in conformance to NACE limits. Table A.22 & A.30 from NACE MR0175 / ISO 15156-3 will not be applicable.

Table 6.7 Limitation of Martensitic Stainless Steel for Pressure Containing Items

Maximum temperature (°C)	Maximum H_2S partial pressure	Maximum chloride content	Minimum pH
160	0.1 bar	any	3.5
160	1 bar	any	5.5

Internal, non-pressure containing compressor components not subject to significant tensile loads can be selected in accordance with NACE MR0175 / ISO 15156-3 or NACE MR0103 / ISO 17945 as applicable.

6.2.3.1 Precipitation Hardened Stainless Steels

Precipitation hardened stainless steel shall not be used for pressure-containing items. Use for valve-stems and for shafts of rotating equipment shall be limited to the following conditions.

All parties consent to this document being signed electronically -PT&CS/GP/INT/2021/3344

Table 6.8 Precipitation Hardened Stainless Steel for Valve-Stems and Shafts

Alloy	Maximum Temperature (°C)	Maximum H_2S Partial Pressure	Maximum Chloride Content	Minimum pH
17-4PH (S17400) 15-5PH (S15500) Custom 450 (S4500)	160	0.1 bar	any	5.5

Like for like replacement outside the above limits is allowed, provided that:

a. No service failures have occurred;

b. Operating conditions have not become more severe since the original installation, in particular lower pH or higher H_2S;

c. The replacement is approved by COMPANY.

Usage for other internal components shall be in accordance NACE MR0175 / ISO 15156-3 or NACE MR0103 / ISO 17945 as applicable and the requirements regarding processing, heat treatment regime, metallurgical condition and properties shall be complied with.

6.2.4 Other Corrosion Resistant Alloys

6.2.4.1 DSS and SDSS

NORSOK M650 / ISO 17782 qualification for specific sizes and product forms or process route is mandatory for the use of DSS and SDSS in sour service / wet H_2S service applications. QTR shall be provided as part of CMTR.

6.2.4.2 Titanium Alloys

Galvanic coupling with CS is not allowed above 80 °C due to risk of hydriding / hydrogen embrittlement of Titanium in H_2S containing aqueous media.

6.2.4.3 Tungum

Shall not be used in sour service / wet H_2S service.

6.2.5 Metallic Claddings

Metallurgically clad layers may be manufactured by weld overlay, by roll-bonding or by co-extrusion, subject to COMPANY approval of the process. For weld-overlays in pressure equipment, the requirements of project welding and NDE specifications shall apply.

There shall be a minimum number of two layers for weld overlay. The minimum final clad thickness shall be 3 mm. Metallurgical Lining is permissible subject to Company agreement. Wall papering technique shall not be used in sour service / wet H_2S service.

Corrosion resistant cladding, linings and overlays shall be in compliance with NACE MR0175 / ISO 15156-3 requirements.

All parties consent to this document being signed electronically -PT&CS/GP/INT/2021/3344

6.2.6 Hard-facing

Hard-facings shall be used in accordance with NACE MR0175 / ISO 15156-3 or NACE MR0103 / ISO 17945 as applicable.

6.2.7 Fabrication and Welding of Stainless Steels and Corrosion Resistant Alloys

6.2.7.1 General

This section applies to the fabrication of vessels and of piping systems both in the shop and on plant. The requirements also apply to welding of internal and external attachments to the pressure boundary components. This section is NOT applicable to seam welding and manufacture of welded pipe.

The requirements regarding welding procedures, welding qualification, testing and weld properties shall be applicable in accordance with NACE MR0175 / ISO 15156-3 or NACE MR0103 / ISO 17945 as applicable, in addition to the requirements of the COMPANY Welding Specification that applies for the equipment or piping.

6.2.7.2 Forming

If a cold deformation of more than 5% plastic strain is applied to any material or component during manufacture, then the item shall be fully re-heat treated as appropriate for that material. Subject to COMPANY approval, a defined stress-relieving treatment may be used as an alternative. This requirement does not apply to materials which are specifically permitted in the cold-worked condition by NACE MR0175 / ISO 15156-3 or NACE MR0103 / ISO 17945 as applicable.

6.2.7.3 Welding of Vessels and Piping Systems

6.2.7.3.1 General

This section applies to welding of pressure vessels, equipment and process piping systems. The requirements of COMPANY welding specification and project welding and NDE specifications in addition to the requirement of this Section shall be applicable. Unless specified otherwise in other project specifications, a minimum of EN 10204 3.1 certifications is required for all welding consumables.

6.2.7.3.2 Martensitic Stainless Steels

Martensitic SS used for pressure-containing components, including low-carbon grades and precipitation hardened grades, shall not be welded. Internal non-pressure containing components may be welded, subject to welding procedure qualification.

Repair welds of castings or forgings are acceptable only if a complete re-heat treatment is performed after repair (austenitise - quench – temper – stress relief or 2nd temper if applicable). Repair weld procedures and heat-treatment shall be qualified in accordance with NACE MR0175 / ISO 15156-3 or NACE MR0103 / ISO 17945 as applicable.

6.2.7.3.3 Acceptable Welding Processes

Pressure retaining welds and attachments to the pressure boundary components shall be made in accordance with COMPANY welding specification and project welding and NDE specifications.

All parties consent to this document being signed electronically -PT&CS/GP/INT/2021/3344

6.2.7.3.4 Welding Procedure Qualification

General Requirements

PQR shall be as per the appropriate design & welding code as specified in applicable COMPANY specification, and product specification, with the amendments and additions in this Specification. The qualifications and all associated testing shall be certified to type 3.2 EN 10204 (3rd party verification required). The preheat used for PQR shall not be greater than that used for production welding. Where repair welds may be performed in fabrication, both weld and weld repair procedures shall be qualified separately. Adequate shielding of the weld zone and back side using inert gas shall be achieved to prevent surface oxidation.

Visual Examinations

Welds shall be visually examined to check for the presence of oxidation on all surfaces. Excessive discolouration and any blackening shall be removed by pickling and passivating treatments.

Macro Examinations and Hardness Survey

Two macro sections shall be taken from the completed joint. The specimens shall be polished, etched, and examined under a magnification of 5X to ensure freedom from defects in accordance with ASME Section IX or equivalent International Standard. Following satisfactory macro examination, a Vickers hardness survey using a 10 Kg load (HV10) shall be made on the macro specimens. The general procedure shall be in accordance with ASTM E384 and NACE SP0472. APPENDIX A4 of this Specification shows suitable hardness survey layouts for typical weld designs. Survey layouts for weld repair qualifications and other weld geometries shall follow the same principles.

Maximum Hardness

No single measurement in weld metal, HAZ or parent material shall exceed the maximum hardness listed in the Table 6.9 below. For other materials not listed, the maximum hardness shall be the maximum parent material hardness in accordance with NACE MR0175 / ISO 15156-3 or NACE MR0103 / ISO 17945 as applicable.

Table 6.9 PQR Hardness Requirements

Material	Maximum Hardness (average of three readings)
316L (S31600) SS	248 HV
6Mo Super ASS	320 HV
DSS	285 HV
SDSS	320 HV
Nickel-based alloys including N08825 and N06625	340 HV
Monel N04400	340 HV

Micro Examination

The microstructure of the base metal, HAZ, and weld deposit shall be examined at x 100 magnification. The ferrite content of austenitic and super–austenitic SS welds shall be 3-10 (ferrite number). For SDSS and DSS, the parent and weld metal ferrite / austenite balance shall be measured metallographically. The ferrite content in weld metal

All parties consent to this document being signed electronically -PT&CS/GP/INT/2021/3344

shall be 35-65 %. There shall be no evidence of sigma phase or other intermetallics in any part of the base metal, heat affected zone or weld deposit.

6.2.7.3.5 Post Weld Heat Treatment

ASS, SDSS / DSS and nickel-based alloys shall not be subject to PWHT. PWHT for martensitic SS shall be in accordance with NACE MR0175 / ISO 15156-3 or NACE MR0103 / ISO 17945 as applicable.

6.2.7.3.6 Attachments

These requirements apply to welding of all temporary or permanent internal or external attachments made to the pressure containing components. All attachment welds shall be two passes minimum. All internal / external attachments shall be welded to the main component using full penetration welds unless approved otherwise by COMPANY. Fillet welding can only be used where fillet welding is the only option e.g. saddles / doubler pads. Pre-heat shall be calculated based on the base metal thickness and chemistry, according to the ruling Specification or Code. Also, the base metal shall be preheated sufficiently to ensure that the required preheat temperature has been achieved through the full material thickness. The preheat temperature shall be measured on the side of the member to which the attachment weld is to be made.

Adequate back-purging shall be achieved in order to prevent oxidation of the surface of the metal in contact with the process environment. The internal weld surfaces shall be made as smooth and as nearly flush as possible to reduce stress risers, remove built-in notches, and to facilitate NDE.

6.2.7.3.7 Production Weld Testing

PMI

100 % PMI of welds is required for all production welds in SS and nickel-based alloys.

Ferrite Testing

Ferrite Testing (by ferrite-scope or equivalent instrument or ASTM E562) is required for all austenitic, super-austenitic, duplex or super duplex SS welds. Measurement calibration shall be applicable according to AWS A4.2M / A4.2. One test shall be made per weld. If that test is out of range or invalid, three tests shall be made, and the mean value shall be the definitive value. The ferrite content of austenitic and super–austenitic SS welds shall be 3-10 (ferrite number). The ferrite content of duplex or super duplex weld metal shall be 35%- 65 %.

Hardness Testing

Production weld hardness testing is required for all weld types in sour service / wet H_2S service, no exemptions are permitted. Production welds hardness testing shall be performed using portable comparison testers in accordance with ASTM A833 or equivalent. Hardness measuring devices for production weld hardness testing shall comply with NACE MR0103 / ISO 17945, Annex B. Where practical, hardness checks shall be made on the process-side, otherwise checks shall be made on the opposite side. Hardness checks shall be made on every weld repair. Hardness checks shall include attachment welds and fillet welds where practical. A test shall consist of three readings, and the mean value shall be the test result (individual higher readings are permitted).

All parties consent to this document being signed electronically -PT&CS/GP/INT/2021/3344

Table 6.10 Production Weld Test Hardness Requirements

Material	Maximum Hardness (average of three readings)
316L (S31600) SS	215 HV (Note1)
6Mo super-austenitic SS	310 HV (Note1)
DSS	285 HV
SDSS	310 HV
Nickel-based alloys including N08825 and N06625	335 HV (Note1)
Monel N04400	335 HV (Note1)

Notes:

1. Hardness surveys or testing may be exempted by COMPANY approval.

6.2.7.3.8 Non-destructive Examination

The coverage of NDE shall be as described in Table 6.11 below. Unless stated otherwise, these apply to all pressure containment SS and CRA welds, including CS + SS / CRA clad items. This includes butt, nozzle, and attachment welds, including both sides of the attachment for internal fillet welds. Removal of slag, spatter, arc strikes, and heat treatment oxides are required.

Table 6.11 NDE Coverage for Pressure Containment SS / CRA Welds

Item	Wall Thickness (mm)	NDE Method		
		Visual	Dye-penetrant Testing (DPT)	RT / UT
Pressure Vessels and Equipment	≤ 50	100 %	100 % Note 1	100 % (Note 1, 2)
	> 50			100 % (Note 1, 2, 3,4)
Piping and Piping Systems	All thicknesses			100 % (Note 1, 2)

Notes:

1. Examined after final PWHT.
2. UT shall be used when RT is impractical.
3. Time of flight diffraction (TOFD) UT method shall be used.
4. To be performed both before and after final PWHT.

All parties consent to this document being signed electronically -PT&CS/GP/INT/2021/3344

TOFD examination shall be in accordance with ASME V article 4 and ASME BPVC code case 2235. For welds whose configuration precludes radiography such as fillet welds or internal parts, UT examination shall be done instead of radiography and the examination report shall be included on the dossier. The acceptance criteria and aspects of NDE for piping and vessels shall be in accordance with COMPANY welding specification and project welding and NDE specifications.

6.2.7.3.9 Stamping

Identification stamping using low-stress (dot, vibratory, and round V) stamps is allowed. Conventional sharp V stamping is allowed in low-stress areas, such as the outside diameter of flanges. Sharp V stamping is not allowed in high-stress areas unless the item receives a subsequent thermal treatment to reduce the hardness to meet the maximum hardness requirement for the base metal specified.

7 REQUIREMENTS FOR SOUR SERVICE / WET H_2S SERVICE IN UPSTREAM OIL AND GAS PROCESSING

7.1 Requirement for Carbon Steel

7.1.1 General

For upstream oil and gas production facilities, all CS materials in sour service / wet H_2S service (pH_2S>0.05 psi) shall comply with the requirements of NACE MR0175 / ISO15156-2 as modified and supplemented by Section 6 and Section 7 of this Specification.

Except where modified elsewhere in this Specification by the requirements for specific product forms, CS shall have a maximum hardness of 22 HRC / 248 HV10 at all locations in weld, HAZ and parent material and the mass fraction of nickel shall be limited to 1% maximum.

7.1.2 Equipment

For CS equipment operating in upstream oil and gas production facilities, APPENDIX A1 (HIC tested plate) and, APPENDIX A2 (SSC / SOHIC tested plate) shall be applicable when testing specified as per this Specification or the project.

7.1.2.1 HIC Requirement for Plates

For sour service / wet H_2S service in upstream oil and gas facilities, HIC testing of plates is required in accordance with APPENDIX A1. Additional requirement for HIC resistance will be applicable as follows:

a. For sour service / wet H_2S service ($pH_2S \geq 0.05$ psi), HIC testing of plates is required in addition to the requirements of Section 6 and Section 7;

b. For partial pressure pH_2S<0.05 psi, and presence of H_2S:

   i. Chemistry shall be controlled to (C $\leqslant$ 0.23 %, S $\leqslant$ 0.020 %, P $\leqslant$ 0.025 %);

   ii. Through-thickness tensile testing, if specified by COMPANY / Project, shall achieve a minimum Z (35) requirements.

7.1.3 Piping

Requirement of Section 6.1.3 is applicable.

All parties consent to this document being signed electronically -PT&CS/GP/INT/2021/3344

7.1.3.1 HIC Testing of Welded Pipe

7.1.3.1.1 Welded Pipe to ASTM Specifications

HIC testing of both the parent plate and the pipe shall be required. Test sampling of plate shall be in conformance to APPENDIX A1. HIC testing shall be performed on one pipe for each Heat and size (diameter x wall thickness) combination. For each pipe sampled, one set of HIC tests shall be taken from within 20 cm of each end. HIC testing shall be performed according to APPENDIX A1.

7.1.3.1.2 Welded Pipe to API 5L for process piping

HIC testing shall be performed on one pipe for each Heat and size (diameter x wall thickness) combination. For each pipe sampled, one set of HIC tests shall be taken from within 20 cm of each end. HIC testing shall be performed according to APPENDIX A1.

7.1.3.2 Non-destructive Examination - Seamless Pipe

Seamless pipe shall be examined on their full length by UT, in accordance with ASTM E213, by pulse angle beam method. In addition, each end of pipe of thickness greater than 12.5 mm shall be examined by compression waves over 127 mm (5 inches) for the detection of any laminations or any other imperfections. All pipes of thickness greater than 38 mm (1½ inches) shall be checked by both angle beam and compression waves methods. Testing shall be performed after the final heat treatment.

7.1.4 Castings

The maximum hardness in the WRPQ test shall be 210 HV10 in the weld metal and 248 HV10 in the HAZ and parent material. Production hardness testing shall be performed on each weld repair. Testing may be performed with portable comparison testers in accordance with ASTM A833 or equivalent. Hardness measuring devices for production weld hardness testing shall comply with NACE MR0103 / ISO 17945, Annex B. A test shall consist of three readings, and the mean value shall be the test result. The test result shall be no more than 210 HV10 (individual higher readings are permitted).

7.1.5 Fabrication and Welding

7.1.5.1 Forming

Carbon and low alloy steel subject to cold deformation resulting in permanent outer fibre deformation greater than 5 % shall be stress-relieved in accordance with NACE MR0175 / ISO 151516-2 and meet the final hardness specified.

Set-on nozzles shall not be permitted in sour service / wet H_2S service unless approved otherwise by COMPANY.

7.1.5.2 Welding Processes

For upstream oil and gas applications, the nickel content of the weld metal in contact with sour environments shall not normally exceed 1.0 % unless subject to successful SSC testing and approved by COMPANY.

SSC testing to be included for PQR for welding of pressure vessel equipment and piping.

7.1.5.3 PWHT

PWHT of piping systems, pressure vessels and equipment shall be according to COMPANY welding specification, and project welding and NDE specifications, in addition to the requirement as specified below:

All parties consent to this document being signed electronically -PT&CS/GP/INT/2021/3344

Pressure Vessels and Equipment

PWHT is mandatory for all thickness.

Process Piping and Pipe Fittings

In a sour service / wet H_2S service environment, PWHT is mandatory for the following cases:

a. Double sided welding, i.e., flange girth welds;

b. Internal weld repair;

c. Internal weld build-up for dissimilar thickness joints to overcome misalignment.

The applicable industry specs must be followed for PWHT requirement for any service not listed above. Other process conditions may also require PWHT, as determined during the project design. Code exemptions for PWHT are not permitted if PWHT is specified for process conditions.

For piping components, PWHT is exempted if:

a. Weld thickness is more than 5mm and ⩽ 19 mm;

b. Weld is not made from inside;

c. Hardness values are in conformance to the requirement of NACE MR0175 / ISO 15156 -2;

d. Weldment is multi-pass welds;

e. PWHT is not specified by design code.

PWHT is mandatory:

f. If not meeting any of the above requirements from a to e, however since PWHT is an essential variable, a qualified weld procedure based on PWHT shall be required to be approved by COMPANY;

g. Where production hardness values are not met; or where,

h. PWHT is specified by Licensor.

Atmospheric storage tanks

PWHT of the walls, base, or roof is not required for sour service / wet H_2S service provided an acceptable hardness is achieved in PQR tests.

Other Components

For other components such as valve or rotating equipment internals, PWHT shall be based on meeting the maximum hardness requirements for the material stated in this Specification.

7.2 Requirement for CRA

7.2.1 Limitation of CRAs

Monel

Shall not be used at temperatures above 90 °C in sour service / wet H_2S service. Monel can be used for stand-off instrumentation without through-flow, not under insulation where the process temperature is above 90 °C.

Copper-based Alloys

Copper and Copper-based alloys other than Monel shall not be used in sour service / wet H_2S service.

All parties consent to this document being signed electronically -PT&CS/GP/INT/2021/3344

Nickel-based Alloys

Alloy 20 (N08020) shall be regarded as a Ni-based alloy and may be used according to NACE MR0175 / ISO 15156-3 table A.13.

Aluminum Alloys

Use of Al alloys in sour service / wet H_2S service is subject to COMPANY agreement. No restrictions in NACE MR0175 / ISO 15156-3 but mass loss corrosion of Al-based alloys is strongly dependent on environmental pH and shall be considered when using Al alloys.

Super-austenitic stainless steel

Selection and material properties shall be in accordance with NACE MR0175 / ISO 15156-3, table A.8.

7.2.2 Applications of CRAs Outside of Approved Limits

CRAs may be used outside the limits approved by this Specification only with COMPANY permission and provided that a qualification process is performed. The qualification shall be in accordance with NACE MR0175 / ISO 15156-3. Acceptable methods are:

a. Documented service experience in equivalent or more severe conditions;

b. Laboratory testing in accordance with NACE MR0175 / ISO 15156-3.

The ITP for the proposed qualification process must be approved by COMPANY in advance. COMPANY representatives shall be able to witness any stage of the qualification.

8 REQUIREMENTS FOR SEVERE SERVICE IN DOWNSTREAM REFINERY

8.1 Requirement for Carbon Steel

8.1.1 Severity Categories

CS susceptibility to each different cracking mechanism is determined by the process environment (like the presence of water, [H_2S], [CN_{Free}], pH) and material properties (chemistry, mechanical properties, and thermal history). The materials selection and material control, testing, and PWHT requirements shall be determined by the severity of the environment with respect to all applicable damage mechanisms. One of four process severity categories shall be defined for each mechanism to specify the material and fabrication requirements. These categories are:

a. Not Severe (NS);

b. Low Severity Service (LSS);

c. Moderate Severity Service (MSS);

d. High Severity Service (HSS).

Design conditions, along with transient conditions (e.g., start-up, shutdown, and process upsets), shall be considered to assess the severity of the process environment. If there is more than one mechanism active, both the material's and the PWHT requirements shall be combined to address the severity of each environment.

All parties consent to this document being signed electronically -PT&CS/GP/INT/2021/3344

If there is no free water likely to be present, then the material should not be considered susceptible to hydrogen blistering, HIC, SOHIC, SSC or carbonate cracking. In high pH streams containing 50ppmw or more H_2S and carbonate ions, an assessment of the process severity for carbonate cracking shall be conducted.

The following tables shall be used to assess the severity of the process environment as applicable to the type of damage mechanism being considered.

8.1.1.1 SSC Severity Categories

The environmental severity for SSC shall be assessed in accordance with Table 8.1.

Table 8.1 SSC Severity Categories

pH of Water	Cyanide content [mg / kg (ppmw)]	H_2S content of water [mg / kg (ppmw)]			
		< 2	2 - 49	50 - 1000	> 1000
< 4.0	(Note 1)	Low	Moderate	High	High
4.0 - 5.4	(Note 1)	Not	Low	Moderate	High
5.5 - 7.5	(Note 1)	Not	Low	Low	Moderate
7.6 - 7.9	< 20	Not	Low	Moderate	High
7.6 - 7.9	⩾ 20	Low	Moderate	High	High
⩾ 8.0	< 20	Not	Low	Moderate	High
⩾ 8.0	⩾ 20	Low	Moderate	High	High

Notes:

1. The level of cyanide has no significance at pH 7.5 and below.

All parties consent to this document being signed electronically -PT&CS/GP/INT/2021/3344

8.1.1.2 Hydrogen Blistering, HIC, and SOHIC Severity Categories

The environmental severity for hydrogen blistering, HIC / SOHIC shall be assessed in accordance with Table 8.2.

Table 8.2 HIC / SOHIC Severity Categories

pH of Water	Cyanide content [mg / kg (ppmw)]	H_2S content of water [mg / kg (ppmw)]			
		< 2	2 - 49	50 - 1000	> 1000
< 4.0	(Note 1)	Low	Moderate	Moderate	High
4.0 - 5.4	(Note 1)	Not	Low	Moderate	Moderate
5.5 - 7.5	(Note 1)	Not	Low	Low	Moderate
7.6 - 7.9	< 20	Not	Low	Moderate	Moderate
7.6 - 7.9	⩾ 20	Low	Moderate	Moderate	High
⩾ 8.0	< 20	Not	Low	Moderate	High
⩾ 8.0	⩾ 20	Low	Moderate	High	High

Notes:

1. The level of Cyanide has no significance at pH 7.5 and below.

8.1.1.3 Alkaline Carbonate Severity Categories

In high pH streams containing 50ppmw or more H_2S and carbonate ions, the environmental severity for ACSCC shall be assessed in accordance with Table 8.3.

Table 8.3 ACSCC Severity Categories

pH of water	CO_3^{2-} content of water			
	10 - 100	100 - 400	400 - 1000	> 1000
⩾ 7.5 - 8.0	Not	Low	Low	Moderate
⩾ 8.0 - 9.0	Low	Low	Moderate	High
⩾ 9.0	Low	Moderate	High	High

8.1.1.4 Amine & Caustic Severity Category

The environmental severity for all amine and caustic service for any concentration shall be categorized as high and PWHT requirement shall be applicable as specified in Section 8.1.2.10 of this Specification.

All parties consent to this document being signed electronically -PT&CS/GP/INT/2021/3344

8.1.2 Applicable Requirement for Severity Categories

8.1.2.1 General Requirements

The general requirements for the sour service / wet H_2S service are contained in the Section 6 of this Specification, and apply to all piping and equipment where a sour service / wet H_2S service, has been specified. Additional requirements are contained in APPENDIX A1 (HIC Testing) and APPENDIX A2 (SSC, SZC and SOHIC Testing) and shall be applicable as per Table 8.4, or if specified by COMPANY.

APPENDIX A1 and APPENDIX A2 may also be referenced when industry experience has shown problems with specific refinery services, or when it is a process licensor requirement or Process Safety Requirement (PSR). Where category is classed as "Not Severe", requirements of this Specification are optional.

All CS process equipment and piping operating in downstream applications that are exposed to a sour service / wet H_2S service environment, shall be designed and fabricated in accordance with the requirements of NACE MR0103 / ISO 17945 as modified and supplemented by Section 6 and Section 8 of this Specification.

Requirement of 1% Ni restriction is not applicable for refinery applications.

Maximum hardness for P-1 material as per ASME IX shall be 22 HRC (237 HBW), however maximum hardness of P-1 grade bends after hot forming, shall be 225 HBW as per NACE MR0103 / ISO 17945. Hardness of other P group material shall be as per NACE MR0103 / ISO 17945, Table 2.

For amine, requirement of API RP 945 shall be applicable, and, requirement of API RP 571 / NACE SP0472 shall be applicable for caustic service and carbonate severity services.

PWHT requirement for all severe services shall comply with Section 8.1.2.10 of this Specification.

8.1.2.2 Equipment

For downstream refinery applications, CS equipment operating in low, moderate and high severity services shall comply with Table 8.4.

All parties consent to this document being signed electronically -PT&CS/GP/INT/2021/3344

Table 8.4 Material Requirement for Severity Services

<table>
<tr><th rowspan="2">Service Risk</th><th colspan="4">Severity Category</th></tr>
<tr><th>Not</th><th>Low</th><th>Moderate</th><th>High</th></tr>
<tr><td>SSC / SOHIC (Note 1)</td><td rowspan="3">Section 6 and Section 8 requirements are optional</td><td>Section 6 and Section 8 requirements are mandatory</td><td>Section 6 and Section 8 requirements are mandatory</td><td>Section 6, Section 8, and APPENDIX A2 (SSC / SOHIC tested plate) requirements are mandatory</td></tr>
<tr><td>HIC</td><td>Section 6 and Section 8 requirements are mandatory</td><td>Section 6, Section 8 and APPENDIX A1 requirements are mandatory (HIC tested plate)</td><td>Section 6, Section 8 APPENDIX A1 (HIC tested plate) and, APPENDIX A2 (SSC / SOHIC tested plate) requirements are mandatory</td></tr>
<tr><td>Alkaline (Carbonate / Amine / Caustic)</td><td colspan="3">PWHT requirements are mandatory (Note 2, 3)</td></tr>
</table>

Note:

1. Need for SSC / SOHIC testing to be determined on project-by-project basis.
2. Maximum velocity limit for amine service shall be in accordance with LICENSOR'S recommendations.
3. PWHT requirements shall be applicable in accordance with Section 8.1.2.10.

When alloy cladding or weld overlay is specified covering full surface, requirements of APPENDIX A1 (HIC tested plate) and, APPENDIX A2 (SSC / SOHIC tested plate) are not applicable.

8.1.2.2.1 HIC Requirement for Plates

HIC testing in accordance with APPENDIX A1 is required for "MODERATE" and "HIGH" severity categories for HIC / SOHIC as per Table 8.2. No HIC testing is required for "NOT" and "LOW" severity categories, however, chemistry control in compliance with this NACE MR0103 / ISO 17945, and through-thickness tensile testing shall achieve minimum Z (35) requirements for "LOW" severity categories.

8.1.2.2.2 SSC / SOHIC Requirement for Plates

Equipment operating in "HIGH" severity service in refinery applications as per Table 8.2, shall be tested in accordance with APPENDIX A2.

8.1.2.3 Piping

For refinery application, the requirements listed in NACE SP0472 for CS piping P1 groups 1 and 2 shall be mandatory requirements for CS in wet H_2S service.

All parties consent to this document being signed electronically -PT&CS/GP/INT/2021/3344

8.1.2.3.1 HIC Testing of Welded Pipe

HIC testing in accordance with APPENDIX A1 is required for welded pipes in “MODERATE” and “HIGH” severity services for HIC / SOHIC categories as per Table 8.2.

No HIC testing is required for welded pipes in “NOT” and “LOW” severity services.

8.1.2.4 Forgings

Weld deposit hardness testing for repair welds in refinery application may be waived off in compliance to NACE SP 0472 requirements.

8.1.2.5 Castings

All castings and welds to the casting (including repairs) shall be postweld heat treated. Production hardness testing shall be performed on each weld repair. Testing may be performed with portable comparison testers in accordance with ASTM A833 or equivalent. Hardness measuring devices for production weld hardness testing shall comply with NACE MR0103 / ISO 17945, Annex B. A test shall consist of three readings, and the mean value shall be the test result.

8.1.2.6 Fabrication and Welding of Carbon and Low Alloy Steels

Slip-on flanges shall not be permitted in Moderate or High severity SSC or HIC / SOHIC services. Stiffening rings and tray support rings shall be attached with full penetration welds. Set-on nozzles shall not be permitted in “MODERATE” or “HIGH” severity SSC or HIC / SOHIC services unless approved otherwise by COMPANY.

8.1.2.7 Forming

Cold-formed material shall be thermally stress relieved following any cold deforming by rolling, cold forging, or another manufacturing process that results in a permanent outer fibre deformation greater than 5 %. Hydraulically formed materials shall be thermally stress relieved regardless of the percent outer fibre deformation. After stress relieving, carbon steels listed as P-No. 1 materials in Section IX of the ASME BPVC shall meet a hardness requirement of 200 HBW maximum. Hardness of other P group material shall be as per NACE MR0103 / ISO 17945, Table 2.

8.1.2.8 Welding Processes

Requirement of 1% Ni restriction is not applicable for downstream refinery applications.

8.1.2.9 Production Weld Testing

A reduced frequency of hardness checks is permitted for shop fabrications similar to Table 6.5 for "LOW" and "MODERATE" severe services subject to COMPANY approval. The Party responsible for hardness testing (e.g. SUPPLIER or SUB-CONTRACTOR) shall advise the schedule of testing to CONTRACTOR or COMPANY in reasonable time and allow CONTRACTOR or COMPANY representative to witness the testing. The results of tests shall be included in the Databooks for equipment or process unit.

All parties consent to this document being signed electronically -PT&CS/GP/INT/2021/3344

8.1.2.10 PWHT

8.1.2.10.1 Sour Service / Wet H_2S service

Pressure Vessels and Equipment

Equipment in all severity service process environments (Table 8.1 and Table 8.2) shall be PWHT'd. The PWHT temperature shall be 620 °C minimum and hold time shall be in accordance with ASME V Boiler and Pressure Vessel Code, except where regardless of the thickness of the base metal, a one-hour minimum hold time shall be specified to ensure complete heat treatment. The heating band requirement (i.e. not placed completely in the furnace) shall be as per NACE SP0472.

Process Piping and Pipe Fittings

In a sour service / wet H_2S service environment, PWHT is mandatory for the following cases:

a. Double sided welding, i.e., flange girth welds;

b. Internal weld repair;

c. Internal weld build-up for dissimilar thickness joints to overcome misalignment.

The applicable industry specs must be followed for PWHT requirement for any service not listed above. Other process conditions may also require PWHT, as determined during the project design. Code exemptions for PWHT are not permitted if PWHT is specified for process conditions.

All piping weldments in "HIGH" severity service (Table 8.1 and Table 8.2) or with design pressure above 64 kg / cm^2 shall be post-weld heat treated. The PWHT procedure shall consist of heating weldments to 620 °C for a hold time of one hour for each 25 mm, or fraction thereof, of metal thickness with a minimum hold time of one hour. The heating band requirement piping shall be as per NACE SP0472 (Appendix D requirements are mandatory).

All piping components in "LOW" and "MODERATE" severity service (Table 8.1 and Table 8.2) shall be PWHT'd with the following exceptions:

a. Weld thickness is more than 5mm and $\leqslant$ 19 mm;

b. Weld is not double sided;

c. Hardness values are in conformance to the requirement of NACE MR0103 / NACE SP0472;

d. Weldment is multi-pass welds;

e. PWHT is not specified by design code;

PWHT is mandatory:

a. If not meeting any of the above requirements from a to e; However since PWHT is an essential welding variable, a qualified weld procedure based on PWHT shall be required to approved by COMPANY;

b. Where production hardness values are not met; or where,

c. PWHT is specified by Licensor.

All parties consent to this document being signed electronically -PT&CS/GP/INT/2021/3344

Atmospheric storage tanks

PWHT of the walls, base, or roof is not required for sour service / wet H_2S service provided an acceptable hardness is achieved in PQR tests.

Other Components

For other components such as valve or rotating equipment internals, PWHT shall be based on meeting the maximum hardness requirements for the material stated in this Specification.

8.1.2.10.2 Alkaline Carbonate Service

All equipment and piping in "MODERATE" and "HIGH" severity categories of ACSCC service shall be post-weld heat treated. The PWHT procedure shall consist of heating weldments to 649˚C to 663˚C for a hold time of one hour for each 25 mm, or fraction thereof, of metal thickness with a minimum hold time of one hour. Heat treatment requirements apply to construction and repair welds as well as internal and external attachment welds. The heating band requirement (i.e. not placed completely in the furnace) for equipment and piping shall be as per NACE SP0472 (Appendix D requirements are mandatory). All equipment and piping in "LOW" severity category of ACSCC service may be post-weld heat treated, for higher tensile strength material or if specified by code or COMPANY.

8.1.2.10.3 Amine Service

All equipment and piping in amine service shall be post-weld heat treated regardless of diameter or wall thickness and in accordance with API RP 945 and NACE SP0472. The PWHT procedure shall consist of heating weldments to 635±15 °C for a hold time of one hour for each 25 mm, or fraction thereof, of metal thickness with a minimum hold time of one hour. This applies also to repair welds and to internal and external attachment welds. The heating band requirement (i.e. not placed completely in the furnace) for equipment and piping shall be as per NACE SP0472 (Appendix D requirements are mandatory).

8.1.2.10.4 Caustic Service

All equipment and piping in caustic service shall be PWHT'd in accordance with API 571 / NACE SP0403. The PWHT procedure shall consist of heating weldments to 635±15 °C for CS and low alloy for a hold time of one hour for each 25 mm, or fraction thereof, of metal thickness with a minimum hold time of one hour. The same requirement applies to repair welds and to internal and external attachment welds. The heating band requirement for piping shall be as per NACE SP0403.

8.2 Requirement for CRA in Downstream Refinery Facilities

Austenitic Stainless Steel

NACE MR0103 / ISO 17945 requirements shall apply for refining and downstream equipment. ASS shall be in the solution-annealed and quenched, or solution-annealed and thermally stabilized condition with compoosition meeting Table 3 of NACE MR0103 / ISO 17945 and hardness limited to 22 HRC with the exception of S20910 and higher alloyed stainless steel (%Ni+(2x%Mo)>30 and Mo>2% or PREN>40%) which can be supplied with 35 HRC and shall be in solution annealed condition.

Martensitic Stainless Steel

The maximum hardness limits shall comply to following:

a. Standard carbon grades e.g. S41000, S42000, J91150 [CA15], and J91151 [CA15M]) - 22 HRC;

b. Low carbon grades, e.g. UNS J91540, CA6NM, F6NM, S42400, S42500 - 23 HRC.

All parties consent to this document being signed electronically -PT&CS/GP/INT/2021/3344

Martensitic Stainless-Steel Forgings

To meet the maximum hardness requirements, ASTM A182 Grade F6NM must have lower tensile properties than stated in ASTM A182. The minimum tensile strength shall be 95 ksi (655 MPa), and the minimum yield strength 75 ksi (518 MPa).

Copper-based Alloys

Risk of corrosion due to sulphides, amines and stress corrosion cracking if NH_3 is present shall be considered if proposed for use in sour refinery environments.

Aluminum Alloys

Shall not be used in sour service / wet H_2S service outside the pH range from 4.0 to 8.5 or if chloride ions are present.

Note: As per NACE MR0103 / ISO 17945, Al alloys can be used in sour refinery environments but can suffer corrosion when exposed outside the pH range of about 4.0 to 8.5 and also pitting corrosion if chloride ions are present.

9 REQUIREMENT FOR NON-METALLIC MATERIALS

9.1 General Guidance

The formulations of non-metallic materials are often unique to individual material Manufacturers and the performance of different products within the same general class may differ significantly. Within the same material class (e.g. Hydronated Nitrile Butadiene Rubber (HNBR) or Glass Reinforced Epoxy / Polymer (GRE / P)) there may be grades suitable and grades not suitable for sour service / wet H_2S service. The tolerance to H_2S is also a function of the application, for example static versus dynamic sealing elements. Tetrafluoroethylene Propylene (FEPM) and Perfluoro Elastomer (FFKM) generally perform well in the presence of H_2S even at elevated temperatures. Fluorocarbon Elastomer (FKM) resistance is more variable at high temperatures. Differences in performance can be observed between different grades of one elastomer, and compounding can also make a difference. Thermoplastics Polytetrafluoroethylene (PTFE), Polyether Ether Ketone (PEEK) and Polyphenylene Sulphide (PPS) can resist H_2S well; the high stiffness of PEEK and PPS, especially when fibre reinforced, makes them especially useful materials as back-up (anti-extrusion) rings for elastomeric seals. Selection of non-metallic materials shall be in accordance with ISO 23936 part 1 and part 2. Other materials and grades may be considered on the basis of successful qualification data provided by MANUFACTURER. Use for other environmental conditions is subject to COMPANY approval depending on the service conditions.

9.2 Qualification and Testing

For materials to be used in environments with above 5 mol% H_2S, MATERIAL MANUFACTURER shall provide historic test or service data proving compatibility of their product with sour environments. Acceptable test methods include:

a. NORSOK M710;

b. ISO 23936;

c. NACE TM0187.

In addition to the H_2S content, the other environmental parameters, such as temperature, pressure, presence of CO_2, hydrocarbons and water shall be appropriate to the proposed service application. This requirement does

All parties consent to this document being signed electronically -PT&CS/GP/INT/2021/3344

not apply to pure (uncompounded) PTFE but does apply to all compounded materials including compounds based on PTFE.

9.3 Elastomer and Seal Materials

Only specific grades identified as suitable for sour service / wet H_2S service by the material MANUFACTURER shall be used. Elastomers shall be qualified in accordance with ISO 23936 part 1 and part 2. Qualification testing shall include ageing, rapid gas decompression, and swelling tests. Compatibility of elastomers with inhibitor shall be demonstrated by testing under simulated conditions by the material MANUFACTURER. Temperature is a critical parameter and must be considered in materials selection. Nitrile Butadiene Rubber (NBR) shall not be used in sour service / wet H_2S service. Elastomer gasket material in contact with stainless steel shall contain less than 200 ppmw of halogens. FKM (fluorinated, carbon-based synthetic rubber) and CAF (silicon-based sealant) shall not be used in amine services, however CNAF suitability for amine service shall be confirmed by MANUFACTURER. Elastomer shall be stored in accordance with ISO 27996.

9.4 GRE / GRP Pipe

Glass Reinforced Epoxy / Polymer (GRE / P) pipe shall be in accordance with COMPANY standard for “Glass fibre Reinforced Plastic Piping and Pipeline System” and ISO 14692. MANUFACTURER shall have historic data proving compatibility of the specific pipe material grade with sour environments. Acceptable methods include:

a. Documented successful field experience, including fluid, environment, duration and operating conditions.

b. NACE TM0298, Evaluating the Compatibility of RTR Pipe and Tubulars with oilfield environments.

Qualification data shall include the adhesive resin and the polymeric seal materials forming part of the piping system.

9.5 Internal Coatings and Linings

Internal organic coatings or linings are NOT an acceptable method to mitigate cracking in sour service / wet H_2S service including HIC, SSC, SCC and SOHIC. However, they may be used to mitigate general corrosion or localised corrosion.

Specific epoxy, phenolic-epoxy and epoxy-novolac coatings may be suitable for sour service / wet H_2S service. The material MANUFACTURER shall provide data proving compatibility of the specific coating grade with sour environments at least equal in severity as regards (1) maximum H_2S partial pressure and (2) operating temperature.

Linings based on PTFE or other polymers may be suitable for use in sour service / wet H_2S service. The material MANUFACTURER shall provide data proving compatibility of the specific material with sour environments at least equal in severity as regards (1) H_2S partial pressure and (2) operating temperature.

10 REQUIREMENTS FOR SPECIFIC COMPONENTS

All materials for specific components shall be selected in accordance with the considerations and requirements of the severe service that they are subject to. This shall take into account the service severity categories and associated standard and requirements as specified in Section 6 to Section 9 when a specific component is fabricated and tested using the aforementioned product forms and methods.

Material selection shall also consider the effects of galvanic corrosion when integrating the system’s metallurgy with that of the specific components.

All parties consent to this document being signed electronically -PT&CS/GP/INT/2021/3344

10.1 Pipe Fittings and Flanges

Specifications and Grades

For fittings made from flat-rolled products, such as spectacle blinds made from plate or fittings forged from welded pipe feedstock, the materials requirements for the feedstock shall apply.

Manufacturing

Steelmaking and manufacture requirements for seamless, welded fittings, and forgings shall follow the same requirements as specified for CS and SS / CRAs in Section 6.

PWHT shall be performed for CS components as per Section 6.1.8.4.4.

Chemical Analysis

Product chemistry requirements for the base material shall follow the same requirements as specified for CS and SS / CRAs in Section 6

Non-destructive Examination

NDE requirements for seamless, welded fittings, and forgings shall follow the same requirements as specified for CS and SS / CRAs in Section 6.1 and Section 6.2, respectively.

HIC Testing

HIC testing for forgings or seamless welded fittings is not required.

If manufacture only involves cutting or profiling without forming (e.g. for spectacle blinds), then HIC testing of the parent plate is acceptable. HIC testing of plate shall be in accordance with Section 6.1.2.5. Where fittings are formed, then HIC testing shall be performed on finished fittings or sacrificial prolongations. The frequency of testing shall be once per heat for each size and type of fitting supplied.

Hardness Testing

The maximum allowable hardness shall not exceed the hardness values as specified in NACE MR0175 / ISO 15156 and NACE MR0103 / ISO 17945 as applicable.

For welded fittings, the hardness shall be measured in the parent material, HAZ and weld metal on both the inner and outer surfaces within a 1.5 mm maximum limit below the surface.

10.2 Fasteners

Specifications and Grades

Bolting / fastener material shall follow the associated piping class with respect to the applicability of NACE MR0175 / ISO 15156 or NACE MR0103 / ISO 17945.

For bolts in direct contact with sour fluid, neither hot-dip galvanized CS nor cadmium plated bolting shall be used. For external applications, the use of hot-dip galvanized CS bolting for optimum corrosion protection under sour service / wet H_2S service is acceptable in accordance with Table 10.1.

Due to environmentally induced SCC problems, standard ASS bolting (304, 316 Grades) is not acceptable for pressure containment purposes e.g. valves bodies & bonnets, pump casings, etc. Alternative high nickel alloy or DSS, such as Incoloy 625, shall be used depending on the operating temperature envelope. Alternatively, low alloy bolts (HDG) for external environments maybe specified depending on operating temperature envelope and shall comply with applicable project Specifications.

All parties consent to this document being signed electronically -PT&CS/GP/INT/2021/3344

ASS fastenings may only be used when both sour and low temperature services apply. Strain hardened ASS Class-2 bolts are not acceptable for piping flange connections in offshore application, due to poor SCC cracking resistance irrespective of service.

Martensitic SS and precipitation-hardened SS shall not be used for fasteners in sour service / wet H_2S service. This includes (but not limited) to UNS S41000, S42000, S17400. Grade S66286 shall only be used with COMPANY approval.

Table 10.1 specifies the allowable fastener material grades, below.

Table 10.1 Specifications and Grades of Fastener Materials

Product Form	Material	Grade
Bolts	CS	ASTM A193 B7M ASTM A320 L7M
	ASS	ASTM A193 B8MA ASTM A320 8MA
	Nickel-based Alloy	ASTM F468 N06625
Nuts	CS	ASTM A194 Grades 2HM ASTM A194 7M
	ASS	ASTM A194 8MA
	Nickel-based Alloy	ASTM F467 N06625

Manufacturing

Where ASS grades have been specified, all fastenings shall be solution annealed after cold hot and cold working, including thread rolling.

If specified by COMPANY, other CRA or SS materials may be used for applications provided that the material complies with NACE MR0175 / ISO 15156-3 or NACE MR0103 / ISO 17945 as applicable.

Chemical Analysis

ASTM A320 only specifies Grade L7M up to 2.5” (65 mm) diameter. Grade L43 chemistry can be used for larger diameter fasteners, but for sour service / wet H_2S service the heat-treatment, mechanical properties and maximum hardness must conform to the requirements for grade L7M.

Hardness Testing

ASTM A193 supplementary requirement S3 shall be applied for 100 % hardness testing.

The maximum allowable hardness shall be 22 HRC. Neither shall the hardness exceed the maximum hardness given in the respective ASTM.

10.3 Valves

Material selection shall consider corrosivity based on fluid properties and other factors such as low temperature requirements, erosion resistance, wear, and mechanical requirements. Depending on the corrosivity of the environment and other design requirements, the valve body may be CS, SS or CRA.

All parties consent to this document being signed electronically -PT&CS/GP/INT/2021/3344

Specifications and Grades

All valve materials in sour service / wet H_2S service shall comply with the requirements of their associated piping class and shall meet the subsequent requirements of NACE MR0175 / ISO 15156 and NACE MR0103 / ISO 17945 for upstream oil and gas processing facilities and downstream refinery, respectively.

Valve bodies shall be flanged or butt-welded only. Socket weld and threaded connections are not allowed.

The use of austenitic and martensitic SS for any valve component shall meet the service requirements of Section 6.2 and 6.2.3, respectively.

Fasteners for valves shall meet the requirements of Section 10.2.

Manufacturing

In addition to the material requirements of the NACE MR0175 / ISO 15156 or NACE MR0103 / ISO 17945 as applicable, the following additional material requirements shall be applicable.

a. Valves for sour service / wet H_2S service shall be ordered from fully approved MANUFACTURERS, i.e. have undergone the prequalification / approval procedure currently applicable by the COMPANY;

b. CS valve bodies (castings) shall meet the requirements specified in Section 6.1.6 (including inspection and testing requirements);

c. ASS shall be solution annealed and quenched to normalise the grain structure, be free of cold-work induced stress;

d. Where a cast ball is selected, weld repair of the ball is not acceptable;

e. The use of ENP (Electroless Nickel Plating) for valve balls and stem is not acceptable for any material for sour service / wet H_2S service.

Chemical Analysis

Carbon content of butt-welding CS bodies shall be limited to 0.25 % max. The CEV by check analysis shall not exceed 0.42 %.

Non-destructive Examination

A visual examination of all material product types shall be performed by the valve manufacturer on all castings of bodies, bonnets, covers, and closure elements to ensure conformance with MSS SP-55.

For CS, ASTM A216 supplementary requirements 4 and 5 shall apply for WFMT and RT, respectively.

For ASS, ASTM A351 supplementary requirements 4 and 5 shall apply for WFMT and RT, respectively.

For nickel alloys, ASTM A494 supplementary requirements 2 and 3 shall apply for liquid penetrant testing and RT, respectively.

HIC Testing

HIC testing for CS plate used for valve applications shall meet the requirements as per Section 6.1.

Hardness Testing

The hardness requirements shall comply with NACE MR0175 / ISO 15156 and NACE MR0103 / ISO 17945 for gas and oil processing facilities and oil downstream refinery, respectively.

All parties consent to this document being signed electronically -PT&CS/GP/INT/2021/3344

10.4 Rotating Equipment

The definition of rotating equipment covers pumps and compressors.

Material selection shall consider corrosivity based on fluid properties and other factors such as low temperature requirements, erosion resistance, wear, and mechanical requirements. All material and testing requirement shall comply to the COMPANY applicable rotating equipment specifications.

Specification and Grades

Where CS plate is used for fabricated casings, requirement of Section 6 to Section 8 shall be followed as applicable.

Fasteners for rotating equipment shall meet the requirements of Section 10.2.

The specification and grades of materials for pumps in varying severities of services shall be selected in alignment with the material classes specified in API STD 610.

The specification and grades of materials for compressor blades and other rotating components shall be proposed by the MANUFACTURER. The MANUFACTURER shall provide service or test data to support the selection. If there is disagreement between the MANUFACTURER and the COMPANY, the COMPANY decision shall be final. The selection must follow the requirements of NACE MR0175 / ISO 15156-3 or NACE MR0103 / ISO 17945, as applicable, along with the following requirements:

a. Shafts may be CS, martensitic SS or a nickel-based alloy. The requirements of Section 6.2.3 shall apply, specifically the limitations on martensitic SS;

b. Piston rods may be martensitic SS, with a hardness limited to 22 HRC, as listed in NACE MR0175 / ISO 15156-3, Table A.22 without limit on H_2S content;

c. ASTM A278 Class 35 or 40 grey cast iron and ASTM A395 ductile iron are allowed as compressor cylinders, liners, pistons, and valves. Aluminium alloy ASTM B26 A03550-T7 is allowed for pistons;

d. UNS G43200 and a modified version of UNS G43200 that contains 0.28 % to 0.33 % carbon are allowed for compressor impellers at a maximum yield strength of 620 MPa;

e. Nickel-based alloys may be used in high severity environments;

f. Trim, overlays and hard facings shall be in accordance with NACE MR0175 / ISO 15156-3 or NACE MR0103 / ISO 17945, as applicable.

g. Class A-8 / Class 12 may be used without limitation on H_2S or chloride levels for amine services or for sour water service at above pH 7.0.

h. Class C-6 / Class 9 (12% Cr) shall not be used in sour service / wet H_2S service unless approved otherwise by Company.

Manufacture

Internal parts for rotating equipment manufactured from either CS or martensitic SS shall be heat treated to minimize residual stresses and shall have a hardness not exceeding 248 HV10 (HRC 22) and yield stress not exceeding 620 N / mm^2.

PWHT for rotating equipment shall be as specified in Section 6.1.8.4.4.

ASS components shall be in the annealed solution condition. Where 17Cr-4Ni precipitation hardening steel is employed, it shall conform to NACE MR0175 / ISO 15156-3. K Monel and Inconel X-750 shafts shall also be in accordance with NACE MR0103 / ISO 17945 or NACE MR0175 / ISO 15156-3 as applicable.

All parties consent to this document being signed electronically -PT&CS/GP/INT/2021/3344

Centrifugal pumps shall conform to API STD 610 and any other additional requirements specified by the COMPANY in the Purchase Order.

Centrifugal compressors shall conform to API STD 617 and any other additional requirements specified by the COMPANY in the Purchase Order.

Fabrication process which results in cold-worked material shall not be used unless approved by the COMPANY.

Non-destructive Examination

All equipment welds shall be designed and fabricated to permit examination by WFMT. 100 % of welds shall be WFMT examined after PWHT.

HIC Testing

If specified, HIC testing for CS plate used for fabricated castings applications shall meet the requirements as per APPENDIX A1.

Hardness Testing

All pressure-retaining welds shall be hardness tested in accordance with NACE SP0472 after PWHT. Weld metal hardness shall be in accordance with NACE MR0103 / ISO 17945 or NACE MR0175 / ISO 15156-3 as applicable.

10.5 Bellows

Bellows units shall comply with the NACE Standard requirement when in contact with any concentration of wet H_2S.

ASS is not acceptable for bellows or other components in the cold worked or highly stressed condition; note that the NACE / ISO Standard prohibit the use of cold worked ASS. The production procedure shall comply with the requirements of the relevant NACE Standards.

10.6 Atmospheric Storage Tanks

Storage tanks shall conform to API STD 650, and the tanks plates shall be “Z” quality as per APPENDIX A3 of this Specification.

If specified, HIC Testing shall meet the requirements as per Section 6.1.2.5

PWHT of fabrication welds is not required provided the hardness of weld and HAZ in PQR tests comply with NACE MR0103 / ISO 17945 or NACE MR0103 / ISO 17945 and NACE SP 0472 requirements as applicable. The maximum allowable hardness in PQR testing is:

a. Weld metal 210 HV10 (or 200 HBW).
b. HAZ 248 HV10.

10.7 Instrumentation

Specification and Grade

All instrumentation tubing for sour services / wet H_2S service shall be constructed from Alloy 825 or Alloy 625.

Internal instrument components that cannot be heat-treated or require high hardness shall be fabricated from materials and in conditions allowed by NACE MR0103 / ISO 17945 or NACE MR0103 / ISO 17945 as applicable.

All parties consent to this document being signed electronically -PT&CS/GP/INT/2021/3344

Manufacture

Materials for instrumentation tubing shall be manufactured by a seamless pipe making route. All product shall be free of cold-work and annealed and quenched after forming.

Hardness Testing

All CS and ASS material shall have a maximum hardness of 248 HV10 / 22 HRC. DSS and SDSS shall have a maximum hardness of 266 HV10 / 25 HRC. Nickel-based alloys shall have a maximum hardness of 344 HV10 / 35 HRC.

10.8 Heat Exchanger Tubing

Heat exchanger tubing shall meet the material, inspection and testing requirements given in API STD 660 or API STD 661 as applicable, along with the following.

Specification and Grades

CS steel tubing shall be in accordance with ASTM A179, unless otherwise specified and approved by CONTRACTOR / COMPANY in an equipment specification.

Tubesheet material shall match the tube material if welded.

Manufacture

Base materials shall be supplied in the normalised condition. Any tubing formed by bending / cold-working shall be undergo stress relief heat treatment in accordance with NACE SP0472.

All tubes, including U-tubes, shall be formed from a single length and shall have no circumferential welds, unless approved by the purchaser.

Non-destructive Examination

A non-destructive electric test in accordance with ASTM A450 shall be carried out in addition to the hydrostatic test.

Hardness Testing

All CS and ASS material shall comply to the maximum hardness specified by NACE MR0103 / ISO 17945 or NACE MR0103 / ISO 17945 as applicable.

10.9 Flare Tips

Specification and Grade

Flare tip material in sour service / wet H_2S shall be supplied in conformance to NACEMR0175 / ISO 15156-3 requirements, commonly specified material grades are:

a. Alloy 800H;

b. Alloy 800HT;

c. Alloy 625; or

d. SS 310S (used up to maximum design temperature of 650 °C).

Note that nickel-based alloys such as grade 800H can suffer sulphidation at high temperatures. Therefore, alternatives such as SS 310S can be specified if deemed suitable for handling sour gas.

All parties consent to this document being signed electronically -PT&CS/GP/INT/2021/3344

10.10 Flexible Line Pipe

Flexible line pipe shall be supplied in conformance to the requirements of API Spec 17J and API RP 17B.

The unbonded flexible pipe shall consist of an anti-collapse innermost carcass layer manufactured from metal strip rolled to form an interlocking spiral carcass. The material for the metal strip may be ASS (304L / 316L), DSS (UNS S31803) or a nickel-based alloy, such as UNS N08825. Extruded over the carcass shall be a polymeric pressure sheath for fluid and pressure containment. Wound over the pressure sheath shall be pressure and tensile armour wires, these wires are helically wound and shall be manufactured from high strength CS. A reinforced adhesive tape layer is wound over the outermost armour layer, and a thermoplastic external sheath extruded over the whole assembly. The flexible pipe ends are complete with end fittings that are normally fabricated from CS. For corrosive or erosive service, DSS or alloy 625 weld overlaid CS is also recommended.

The Flexible line pipe material shall be selected by the flexible pipe manufacturer based on bore fluid composition and applicable process conditions.

The gas permeation and effects of the gas permeated i.e. H_2S, CO_2 and water vapour effect on the pressure sheath, pressure and tensile armour layer and the effect on the end fitting material must be considered and appropriate material selection shall be made by the flexible pipe manufacturer.

For sour service / wet H_2S service, the end fitting material, carcass, pressure and tensile armour wire layer material shall be supplied compliant to the sour service / wet H_2S service requirements of NACE MR0175 / ISO 15156 or NACE MR0103 / ISO 17945 as applicable.

11 TESTING

Table A5. 1 in APPENDIX A5 summarises the testing requirements for all CS product forms.

The requirements for HIC testing of plate are given in APPENDIX A1.

The requirements for SSC / SZC / SOHIC testing are given APPENDIX A2.

11.1 Mechanical Testing of Base Metal and Weld Metal

11.1.1 Tensile Testing

Tensile tests shall be performed in accordance with ISO 6892-1 / ASTM E8.

Mechanical testing requirements shall comply with the values and frequency as specified within the product specifications of the materials certified for use in severe service in accordance with this specification.

Further tensile testing for through-thickness properties of HIC resistant plate shall be performed as specified within APPENDIX A3.

11.1.2 Production Impact Test Plates

PQR and production Charpy V-Notch impact tests shall be performed when required by the product specification.

All base metal sampling and test procedures shall be per the ASME SEC VIII Division 1 & 2 Code.

Impact testing details for welds, both during procedure qualification and during production shall be per the ASME Code. Impact test shall be carried out at temperature 10 °C colder than Minimum Design Metal Temperature (MDMT).

All parties consent to this document being signed electronically -PT&CS/GP/INT/2021/3344

11.1.3 Production Hardness Testing

Hardness tests shall be performed where specified within this specification. The only exclusion where hardness tests are not required on all components is for small items such as small springs, pins, etc. (except in the case of ASS). In such cases, the Manufacturer shall conduct hardness tests on a random basis from production batches to ensure that the product complies with this specification.

Procedures and test methods used for hardness testing shall be in accordance with ASTM E384. Hardness measuring devices for production weld hardness testing shall comply with NACE MR0103 / ISO 17945, Annex B.

Procedures and test methods used for portable hardness testing shall be in accordance with ASTM A833, ASTM A1038, ASTM E110 or equivalent subject to Company prior approval.

The following requirements for hardness testing shall apply:

a. ASTM A833 supplementary requirement S1 shall be applied - the hardness test shall consist of three hardness readings. The average of these three readings shall be reported as the test result;

b. Hardness tests shall be performed on the side exposed to the process fluid when possible;

c. Hardness testing results shall be expressed in Brinell numbers. The hardness report shall indicate actual hardness reading for the test method used plus Brinell conversion. The use of methods other than portable Brinell tester require CONTRACTOR approval. Conversion shall be in accordance with ASTM E140;

d. Hardness tests shall be performed after PWHT when PWHT is required;

e. The hardness test report shall also include the details of the personnel conducting hardness tests and last calibration date.

The CONTRACTOR representative(s) may witness the performance of production hardness testing. The documented test results shall be submitted to the CONTRACTOR when requested.

For downstream refinery applications, all pressure-retaining welds that fall within the scope of NACE SP0472 shall be hardness tested after final PWHT. Weld metal hardness shall not exceed 200 HBW. Unless exempted by NACE SP0472, the SUPPLIER shall perform Brinell hardness tests on every 3 m of main seam weld, but not less than one set of readings for each main seam. One Brinell hardness reading shall be taken on each nozzle weld, manway weld and piping buttweld. When access is available, tests shall be performed on the process contacted side of the weld.

Hardness test results and locations shall be recorded.

11.1.4 Weld Procedure Qualification Hardness Testing

Each PQR shall include a macro section and Vickers hardness readings - indicated in APPENDIX A4 as per NACE SP0472 with minimum 3 hardness measurement indentations in each area of the HAZ and in each of the weld metal base metal. Testing shall be in accordance with ASTM E92.

All parties consent to this document being signed electronically -PT&CS/GP/INT/2021/3344

11.2 Chemical Analysis

Chemical analysis testing shall be performed for all materials and product forms when required by and in accordance with this specification. If no details for material chemistry are given, the material shall comply with the product form specification.

11.3 Ferrite Testing

Ferrite testing shall be performed on equipment manufactured from solid ASS. The ferrite number shall be between 3-10 FN as determined by a magnetic instrument such as a Severn Gauge or Ferrite Scope calibrated in accordance with AWS A4.2 or calculated using the Welding Resource Council (WRC) 519, 1992 Ferrite Diagram. Documentation of test results shall be available for review by the CONTRACTOR.

11.4 Non-destructive Examination

11.4.1 Ultrasonic and Radiographic Testing

Both methods of either UT or RT, and the associated acceptance criteria, shall be in accordance with the specified code and performed in accordance with the written procedures.

All weld seams require 100 % UT, to be performed by the method as specified within this specification.

If equipment contains any components requiring impact testing, then all butt welds on that equipment shall be 100% RT inspected.

UT shall be used where the component geometry makes RT impractical for use.

All tie-in welds shall be radiographed in accordance with the relevant project specifications.

11.4.2 Penetrant Testing

All equipment welds shall be designed and fabricated to permit examination by a method of penetrative particle testing. For CS items and components, the method shall be WFMT, and for SS and CRA materials this shall be DPT.

100 % of welds shall be WFMT / DPT examined after PWHT. Testing shall be limited to internal (process contacted) weld surfaces on the pressure boundary. This includes butt, nozzle and attachment welds, including both sides of the attachment for internal fillet welds. Testing shall be in accordance with project welding and NDE Specification and the following requirements, unless otherwise authorized by the CONTRACTOR and the COMPANY:

a. Brushing or grinding) shall be performed to provide a suitable surface for WFMT. Removal of slag, spatter, arc strikes, and heat treatment oxides shall be completed prior to performing NDE;

b. WFMT shall be performed after PWHT;

c. The DC prod method shall be used when WFMT is specified prior to PWHT;

d. The AC magnetic yoke method shall be used when WFMT is specified after PWHT;

e. Typical “non-relevant” surface discontinuities such as scratches, undercut, sharp angled contours, cold lap or porosity shall be thoroughly investigated by the examiner to ensure their acceptability.

UT shall be used in lieu of WFMT with the prior approval from the Contractor if there is no access to the internal weld surfaces.

All parties consent to this document being signed electronically -PT&CS/GP/INT/2021/3344

11.5 Hydrostatic Testing

The test fluid for hydrostatic testing shall be inhibited water, free from sulphide. Chloride content shall be limited to a maximum of 100 ppm & pH 6 - 8 for CS and maximum 50 ppm for SS equipment. Equipment shall be flushed with water and dried with clean, oil free air after the testing.

Hydrotest water temperature shall be per ASME Code and shall be carefully monitored to avoid the possibility of brittle fracture.

11.6 Intergranular Corrosion and Pitting Testing for ASS & CRAs Materials

The method for Intergranular Corrosion (IGC) and Pitting testing shall be in accordance with Table 11.1 below. Weld overlays, welds and internals, pressure and non-pressure retaining, shall be IGC tested in accordance with ADNOC Specification for IGC.

Table 11.1 Intergranular Corrosion Test Requirements for SS and CRAs

Material	Test Requirements
ASS	ASTM A262 Practice E
DSS	ISO 3651-2
Alloy 825	ASTM G28 Method A
Alloy 625	ASTM G28 Method A (Note 1)

Notes:

1. ASTM MNL 20 latest edition shall be followed for application and interpretation of the test result.

All parties consent to this document being signed electronically -PT&CS/GP/INT/2021/3344

SECTION C – OTHER REQUIREMENTS

12 DETAILS OF SCOPE SUPPLY

Materials within the scope of this Specification are for severe service and shall be designated as such on the purchase order.

13 QUALITY CONTROL AND ASSURANCE

Quality Management Systems shall comply with the applicable requirements of ISO 9001 and ISO 9004 with due regard to ISO 19011. The CONTRACTOR shall ensure that the SUPPLIER always has in effect a QA programme which clearly establishes the authority and responsibilities of those responsible for the quality system. Persons performing quality functions shall have sufficient and well-defined authority to enforce quality requirements that they initiate or identify and to recommend and provide solutions for quality problems and thereafter verify the effectiveness of the corrective action.

Quality System and Quality Control requirements shall be identified and included in the CONTRACTOR's Purchase and Subcontracting DOCUMENT(s). Based on these requirements the SUPPLIER & SUBCONTRACTOR shall develop a QA / QC programme which shall be submitted to the CONTRACTOR for review and approval. The SUPPLIER's QA / QC programme shall extend to his SUB-SUPPLIERS.

COMPANY / CONTRACTOR reserves the right to inspect materials and workmanship at all stages of manufacture and to witness any or all tests.

The Criticality Rating (CR) System outlined in AGES-SP-13-001 shall be used by CONTRACTOR or CONTRACTOR's designee to develop the design checking levels and minimum requirements for shop inspection, testing and material certification.

14 SUB-CONTRACTORS, SUB-SUPPLERS

This specification defines the requirements placed on SUPPLIERs. Where work is passed to SUBCONTRACTORs or SUBSUPPLIERs, the specified requirements shall be performed by those SUBCONTRACTORs or SUBSUPPLIERs. CONTRACTOR is responsible for ensuring compliance of suppliers and sub-contractors and shall provide objective evidence of its QA / QC surveillance for all levels of its activity.

15 MATERIAL CERTIFICATION

Certification for all materials / equipment in severe service environments shall adhere to the requirements of NACE MR0175 / ISO 15156 or NACE MR0103 / ISO 17945, as applicable. Certified Material Test Reports (CMTR) for the basic material shall be type 3.2 according to EN 10204 for all pressure containing items in contact with wet H_2S environment. For non-pressure containing components, CMTR for the basic material shall be type 3.1 according to EN 10204.

16 INSPECTION AND TESTING REQUIREMENTS

Due to the scope of this Specification, the inspection and testing requirements are given in Section B, per product form. Further details on the standards for the required tests are given in Section 11.

All parties consent to this document being signed electronically -PT&CS/GP/INT/2021/3344

17 STOCK MATERIAL AND OFF-THE-SHELF EQUIPMENT

COMPANY or CONTRACTORs may need to obtain materials or equipment for maintenance, replacement and repair purposes, when manufacture to order is not practical and items will be sourced from SUPPLIER's stock. The technical requirements of this Specification in full shall apply equally to off-the-shelf and stock materials or equipment as they do to items manufactured to order. Compliance shall be evidenced by appropriate certified and traceable documentation including Certified Material Test Reports, Inspection Reports, etc

All materials must be produced by the original MATERIAL MANUFACTURER for sour service / wet H2S application, and this shall be clearly stated on the original material certificate by "sour service", "ISO15156" / ISO 17945, "NACE" or an equivalent term. Material which was not originally produced as sour service quality by the original MATERIAL MANUFACTURER and was reclassified at a later stage of the supply chain is NOT acceptable, even if this is supported by results of tests for resistance to HIC or SSCC etc. This type of material sometimes referred to as "pseudo-NACE" or "pseudo-HIC"

If necessary, to meet the requirements of this Specification, PURCHASER (COMPANY or CONTRACTOR) shall require additional verification testing or additional documentation.

18 SPARE PARTS

Not applicable.

19 PAINTING, PRESERVATION AND SHIPMENT

After completion of final examination of the equipment, the equipment inside shall be cleaned and dried. Heat drying or other evaporative means shall not be used due to possible chloride contamination from the hydrotest water.

All openings shall be sealed with a steel cover and gasket, and the equipment shall be filled with nitrogen gas at 0.35 kg / cm^2 (5psig) minimum for transportation. The vessel shall also be marked, and a visible warning tag shall be attached at each manway stating, "*DO NOT ENTER- NITROGEN FILLED VESSEL*".

For preservation during transportation, all exposed machined surface such as flange faces, bolting, and stainless steel surfaces shall be protected by applying a suitable grease, rust preventive oil or coating. Protective grease or oils shall not contain zinc, free chlorides or other halides after curing.

20 COMMISSIONING

Not applicable.

21 TRAINING

Not applicable.

22 DOCUMENTATION / MANUFACTURER DATA RECORDS

Manufacturer shall submit the following documents as part of MRB (Manufacturer Recording Data Book)

a. CMTR showing all chemical compositions and mechanical test results;

b. All heat treatment data showing hold time and temperature, heating & cooling rate with chart for PWHT;

c. Results of impact test before and after step cooling heat treatment;

All parties consent to this document being signed electronically -PT&CS/GP/INT/2021/3344

d. WPS & PQR;
e. Stage wise inspection report, PMI report;
f. Hardness test results;
g. NDE reports;
h. Production test results;
i. Test blocks for Calibration & Testing.

23 GUARANTEES AND WARRANTY

Not applicable.

All parties consent to this document being signed electronically -PT&CS/GP/INT/2021/3344

SECTION D – STANDARD DRAWINGS & DATASHEETS

24 DATASHEET TEMPLATES

Not applicable.

25 STANDARD DRAWINGS

Not applicable.

All parties consent to this document being signed electronically -PT&CS/GP/INT/2021/3344

SECTION E - MATERIAL TESTING

APPENDIX A1. REQUIREMENTS FOR HIC (AND SWC) TESTED STEEL PLATE

A1.1. Scope

This Appendix defines supplementary requirements for Hydrogen Induced Cracking (HIC) / Step Wise Cracking (SWC) tested bare CS plate, including piping components made from plate.

The requirement for HIC testing applies if the material selection diagram, drawing or data sheet references “MSS” or “HSS” or includes the requirement for HIC tested steel or references this Appendix. Appendix 1 may also be referenced when industry experience has shown problems with specific refinery services, or when it is a process licensor requirement. Requirement of this Appendix also applies if required by the main body of this Specification. The requirements in this Appendix are additional to those specified in the main body of this Specification.

HIC testing is not required for CS plate which will be overlaid over the entire plate surface, with corrosion resistant alloy, when in operation. Plate which is only partially overlaid with corrosion resistant alloy shall meet the HIC testing requirements (if HIC testing specified) of this specification.

For stock items with existing HIC test data, the details of the Test Laboratory and the Laboratory’s internal test procedure shall be provided to COMPANY for approval. Certification of the tests to EN 10204 type 3.2 (third party inspection) is mandatory, otherwise, additional tests shall be performed in accordance with this Specification.

Testing shall be in accordance with NACE TM0284 latest edition, with the clarifications and amendments described in this Appendix.

A1.2. Manufacture of Steel

The steel shall follow the manufacture requirements as follows:

a. The steel shall be vacuum-treated, fully de-oxidized, desulphurized and dephosporized;

b. The manufacturing / rolling process shall be such that a homogeneous microstructure is obtained;

c. Inclusion shape control is required; and,

d. All plates and formed heads shall be furnished in the normalized condition. The normalizing temperature shall be 900 °C ± 14 °C. Normalizing shall be carried out as a separate heat treatment.

All parties consent to this document being signed electronically -PT&CS/GP/INT/2021/3344

Plate Manufacturing Documentation

The steel plate MANUFACTURER shall supply a mill specification giving details of the following items:

a. Steelmaking process, including deoxidization and desulphurization practice, inclusion shape control method and the use of vacuum degassing;

b. Casting process, i.e. ingot or continuous casting, including casting speed, tundish superheat, segregation control measures;

c. Plate rolling, including slab reheating temperature, start and finish rolling temperature and reduction ratios; and,

d. Heat treatment details.

A1.3. Sampling for HIC Testing

When specified, plate materials shall be tested for resistance to HIC according to this Appendix by, or on behalf of, the material MANUFACTURER or the CONTRACTOR. Separate sampling and testing shall be performed for each distinct production route, each distinct plate grade and each different plate thickness.

With COMPANY agreement only, plates with nominal thickness differing by not more than 6 mm may be treated as equivalent thickness for the purpose of HIC test sampling. The plate production route is characterised by:

a. Steel plant;

b. Sequence of steel-making operations;

c. Casting method;

d. Rolling mill; and

e. Type of thermo-mechanical treatment (e.g. normalised, normalised-rolled, controlled-rolled etc.).

Plates shall be regarded as produced to different production route if any of these characteristics are different.

Sampling Frequency

A minimum of three plates shall be tested from the first heat of production, representing the front slab, an intermediate slab and the rear slab in the casting sequence. For subsequent heats, one plate shall be tested at each thickness from each heat.

Sampling Location

The test specimen location shall be at one end, mid-width of the sampled plate, with the longitudinal axis of the test specimen parallel to the principal rolling direction of the plate.

Test material shall be in the same metallurgical condition as the finished vessel or equipment. Where PWHT or stress-relief will be performed after fabrication of the vessel or equipment, the test material shall be given the same heat-treatment before machining of the HIC test pieces.

All parties consent to this document being signed electronically -PT&CS/GP/INT/2021/3344

Simulated PWHT (if applicable)

The simulated PWHT condition for HIC testing shall be in accordance with ASTM A-20 Supplementary Requirement S3. The number of cycles of simulated PWHT shall include:

a. The PWHT required for the equipment fabrication;

b. One cycle for shop repair; and

c. One extra cycle of PWHT for future modification / plant repair.

A1.4. Inspection and Quality Requirements

A1.4.1 Ultrasonic Examination

All plates shall be subjected to an Ultrasonic lamination check in accordance with ASME BPVC Section II ASME SA-578 with acceptance Level A. Supplementary requirement S1 of SA 578 shall also be applied.

A1.4.2 HIC Testing

All materials shall be tested by the SUPPLIER or the material MANUFACTURER for resistance to HIC.

Test Laboratory

Testing laboratories to be used for HIC testing shall be submitted for approval by CONTRACTOR / COMPANY. The SUPPLIER shall submit a detailed procedure for testing, metallographic preparation and evaluation of HIC specimens to CONTRACTOR for approval. The testing laboratory shall qualify their test method using samples from a steel of known crack sensitivity. The qualification and production tests may be witnessed by CONTRACTOR's representative.

Test-piece Preparation

Test coupon blanks may be flame-cut, provided the flame-cut edges are a minimum of 40mm from the final machined test-pieces. Test-pieces shall be identified by hard–stamping using low impact type stamps.

Welded pipe

Specimen numbers and locations shall be as per NACE TM0284. The test specimen thickness must be at least 80 % of the full wall thickness of the pipe. If necessary, then full thickness specimens may be used, retaining the original pipe curvature at the OD and ID surfaces. In this case, the curved unmachined surfaces shall be cleaned to a 100 % white metal finish by blasting with clean glass bead media. Material shall not be flattened during preparation.

Seamless pipe

Seamless pipe, if required for HIC testing shall be tested similar to welded pipe.

Plate

One plate shall be tested from each plate thickness produced from each heat of steel. However, each test plate qualifies material from that heat, up to 6 mm thinner. Specimen numbers and locations shall be as per NACE TM0284, with the exception that for thickness > 50 mm and < 88 mm, 2 extra specimens will be required at the mid-thickness location. Distribution of HIC specimens in relation with material thickness shall be as follows:

All parties consent to this document being signed electronically -PT&CS/GP/INT/2021/3344

Table A1. 1Testing Frequency for HIC Resistant Plate

Material Thickness (mm)	Requirements
≤ 30	3 parallel specimens
> 30 ≤ 50	1 at each outer surface (2 specimens) 1 at centre of plate Total: 3 specimens
> 50 ≤ 88	1 at each outer surface (2 specimens) 3 specimens at centre of plate Total: 5 specimens
> 88 ≤ 148	Staggered through plate thickness, minimum 1mm overlap Total: 5 specimens
> 148 < 206	Staggered through plate thickness, minimum 1mm overlap Total: 7 specimens

Fittings

Three HIC test specimens shall be tested per sampled item. So far as practical, the test specimens shall:

a. Sample different parts of the fitting, e.g. main run and branch for Tees, both parent and weld areas for welded fittings;

b. Be 100 mm x 20mm width x maximum 30mm thickness.

The sampling and sectioning plan shall be provided for COMPANY in advance of testing for approval.

Testing

HIC testing shall be in accordance with NACE TM0284 modified to employ the low pH solution of NACE TM0177, test solution A (i.e. 0.5 % acetic acid, 5 % NaCl with 1 bar H_2S). The pH value and H_2S content of the solution shall be measured and recorded according to the following schedule.

All parties consent to this document being signed electronically -PT&CS/GP/INT/2021/3344

Table A1. 2 pH and H_2S Limits Throughout NACE TM0284 Test

Stage of Test	pH Measurement	H_2S Measurement (Note 1)
Make-up of the test solution, before introducing H_2S	2.7 (-0.1, +0.1)	Not applicable
At saturation with H_2S (the beginning of the test period)	2.9 - 3.3	Minimum 2300 ppm
20 - 28 hours	Maximum 4.0	Not required
44 – 52 hours	Maximum 4.0	Not required
68 – 76 hours	Maximum 4.0	Not required
End of the test (96 hours after saturation)	Maximum 4.0	Minimum 2300 ppm

Note

1. H_2S measurement shall be by idiometric titration in line with NACE TM0284.

Evaluation

After removal from the test, each test-piece shall be lightly abraded on the wide faces to reveal any blistering. Blisters shall be documented by photography or by dimensioned sketches. Metallographic evaluation shall comply with NACE TM0284 with the additional requirement that all faces shall be subjected to either wet magnetic particle testing or macro-etching, before final metallographic polishing, in order to make an accurate assessment of whether any significant cracks are present which may become invisible due to smearing of the metal surface during final polishing. The individual section Crack Length Ratio (CLR), Crack Thickness Ratio (CTR) and Crack Sensitivity Ratio (CSR) values shall be calculated according to NACE TM0284. The ratios shall be reported for each Individual Section, plus the Test-piece Average and Sample Average.

Note: "Test-piece average" is from three cross-sections; "sample average" is from a minimum of 9 sections (3 test-pieces).

Acceptance Criteria

No individual crack on any section shall exceed 5 mm length. Acceptance criterion shall be in accordance with NACE MR0175 / ISO15156-2.

All parties consent to this document being signed electronically -PT&CS/GP/INT/2021/3344

Table A1. 3 Acceptance Criteria for Plate for Pipe-making and Vessel Fabrications; Process Piping, Line Pipe & Pipe Fittings

	Maximum %		
	CLR	CTR	CSR
Individual section	Information only	Information only	Information only
Test-piece average	15	5	2
Sample average	15	5	2

Retesting

Invalid tests

Retesting of material not meeting the stated requirements is permitted only under the following conditions:

a. When the test procedure is found to be not in accordance with the standard test method, retests from the same general location of the original plate may be taken; or,

b. When material for retesting is taken from another plate representing the same thickness. In this case, the original plate shall be rejected.

Material Failure

If a sample fails in a valid test:

a. The individual plate or pipe tested shall be rejected;

b. Plates or pipes from the same heat may be accepted only based on testing each piece individually;

c. Where the sample represents a lot of more than one heat, re-tests may be made on two more plates or pipes to represent the lot. The retest items shall be selected by CONTRACTOR or COMPANY representative. If both retests are satisfactory, the rest of the lot shall be accepted, except for the heat which failed the initial test. If one or both retests fail, the entire lot shall be rejected.

For forgings and finished components where HIC tests are destructive:

a. Other heats or batches shall be qualified by testing samples in the normal way, ignoring the rejected heat or batch; and,

b. The heat or batch represented by the failed sample shall be rejected.

Certification

Certification of tests to EN 10204 type 3.2 (third party inspection) is mandatory. The following information shall be supplied in a report with the test certificates:

a. Identification of the material showing traceability back to heat number;

b. Location of test-pieces;

c. Measurements from the test (pH, dissolved H_2S);

d. Photo- macrographs or dimensioned sketches to show any blisters;

All parties consent to this document being signed electronically -PT&CS/GP/INT/2021/3344

e. Results of cracking evaluation indicating CLR, CTR and CSR for each section, mean values for Test-piece and mean values for Sample, indicating pass or fail;

f. Example photomicrographs (per sample):

   a. Unetched, showing the type of inclusion in the steel (200 X);

   b. Etched, showing the parent material microstructure (200 X);

   c. Photo-micrographs showing each section with cracking.

A1.4.3 Banding Tests

Banding tests per ASTM E1268 shall be done on each HIC test specimen and results shall be reported for information only.

A1.4.4 Plate Repairs

Weld repairs of plate defects shall require prior approval by CONTRACTOR / COMPANY.

A1.5. Certification of Conformance

The MANUFACTURER shall provide written certification of conformance in accordance with ASTM A20, Paragraph 19 for each heat of plate steel supplied to meet the requirements of this Appendix, including the following information:

a. Chemistry;

b. Mechanical properties (including tests after simulated PWHT);

c. HIC testing results;

d. Ultrasonic examination results;

e. Banding test results;

f. Impact tests results (when needed to satisfy Minimum Design Metal Temperature requirements).

A1.6. Use of Corrosion-Resistant Alloy Cladding or Weld Overlay as an Alternative to HIC Resistance Plate

One established method of preventing damage in high severe wet H_2S environments has been the use of CS grade with corrosion-resistant alloy cladding or weld overlay. Use of such corrosion-resistant alloy cladding shall be considered for the equipment in the following design condition, provided such enhanced protection would not lead to other kind of corrosion and / or deterioration like CLSCC, Ammonia stress corrosion cracking, etc.:

a. Design pressure of the equipment is > 64kg / cm2;

b. Thickness of the plate is > 38mm;

c. Ammonium Bisulphide [NH_4HS] concentration in the stream is > 2%;

d. If weld joints are not accessible for on stream inspections like WFMT.

All parties consent to this document being signed electronically -PT&CS/GP/INT/2021/3344

APPENDIX A2. REQUIREMENTS FOR SSC, SZC, AND SOHIC TESTING

A2.1. Scope

This Appendix defines supplementary requirements for SSC and SOHIC (SZC) testing. Material shall have been qualified for SSC resistance prior to SOHIC / SZC evaluation.

A2.2. Test Method

The plate Manufacturer / Supplier and CONTRACTOR shall provide evidence of the suitability for wet H_2S service of the raw material / manufacturing procedure for COMPANY approval. In the absence of satisfactory evidence, sulphide stress cracking tests shall be used to qualify the manufacturing procedure for new equipment and to qualify materials for the intended service conditions.

Four point-bend test as specified in NACE TM0316 shall be used to evaluate resistance of carbon steel, low alloy steel and CRA to SSC and SCC and the test method shall be approved by COMPANY. NACE MR0175, B4.3, full ring test may be used by for SOHIC / SZC evaluation. Except as stated in this section, NACE TM0177 shall be followed for details of the general laboratory procedures, equipment, handling of H_2S, test solution preparation etc.

Three test specimens shall be taken transverse to the weld. Test-pieces shall normally be prepared with the inner weld bead approximately at the mid-length position. The pipe inner diameter surface and internal weld reinforcement shall be left unmachined. Test-pieces shall not be flattened. All machined surfaces shall be finished to Ra 0.8 µm or better by machining. The un-machined surfaces shall be cleaned of scale, rust etc. by blasting with clean, fine glass beads. Test-pieces shall be examined for any pre-existing features by visual inspection and by wet magnetic particle inspection. Test-pieces with pre-existing features may be discarded and replaced by new test-pieces.

Testing shall be carried out at stress level equal to or greater than the actual service stress using the 4-point bend method (internal surface in tension).

NACE TM0177, test solution A shall be used with a starting pH adjusted to pH 3.5 and 1 bara (pure) H_2S. The test period shall be 720 hours.

The distance between the inner supports shall be equal to or greater than the width of the weld plus 50 mm (2 in), with 25 mm (1 in) each side of the weld.

The specimen dimensions shall be as follows:

a. Thickness of 15 mm (0.6 in) or the actual thickness, whichever is less;

b. Width of ⩾ 20 mm (0.8 in);

c. The usual length shall be approximately 110 - 120 mm. Other lengths are allowable if necessary due to the sample geometry;

d. Edges may be chamfered or rounded up to 0.5 mm into the faces to reduce possible stress-concentrations at the edges.

The applied stress shall be verified by the direct application of strain gauges.

Carbon steel and low alloy steel SSC test specimens that meet SSC acceptance criterion, shall be evaluated for resistance to SOHIC as per NACE MR0175 / ISO 15156-2.

All parties consent to this document being signed electronically -PT&CS/GP/INT/2021/3344

A2.3. Examination

Test-pieces shall be examined visually and by wet magnetic particle inspection on the face subjected to tensile loading. Metallographic sections shall be taken at any suspect indications, or, in the absence of any features, at least two metallographic sections shall be made parallel to the stress axis of the specimen and within the inner loading point.

A2.4. Acceptance Criteria

The SSC acceptance criteria shall meet the requirements of NACE TM0316 and any additional criteria specified in the latest NACE MR0175 / ISO 15156 all parts technical circular. There shall be no surface-breaking cracks extending more than 0.1mm in the through thickness direction.

The following features are acceptable and shall not be classed as failures:

a. Pitting and corrosion without cracking;

b. Surface lap defects;

c. Weld porosity, lack of fusion;

d. Internal cracks in the parent material (e.g. HIC-type cracks).

The SOHIC (SZC) test piece evaluation and acceptance shall comply with the requirements of NACE MR0175 / ISO 15156-2 (including latest technical circulations).

All parties consent to this document being signed electronically -PT&CS/GP/INT/2021/3344

APPENDIX A3. THROUGH-THICKNESS TESTING - CARBON STEEL PLATES

A3.1. Scope

This appendix defines the requirements for through-thickness testing of “Z” quality plate material.

Plate with thickness below 20 mm shall not be tested for through-thickness properties, and hence, shall be HIC tested for all regions.

A3.2. Definition

The plane through the cross-section or “thickness” of plate material is associated with the Z-axis, hence plate with “through-thickness” properties are referred to as being “Z” quality materials. The Z suffix is often attached when specifying grades of plate materials and indicates that the material shall be produced by steel making and fabrication routes, as well as the appropriate inspection and testing methods, to ensure that the steel plate has homogenous properties through the Z-axis.

A number is attached to the Z in the format Z#, i.e. Z35, to specify the minimum percentage reduction in area across the average results of the through-thickness tensile test.

A3.3. Test Method

Where specified, unless approved otherwise by the COMPANY, six through-thickness tensile tests shall be performed at the start of production on each plate in the “as rolled” condition from each slab of stock material. The test locations are indicated by Figure A3.1. Test-pieces “A” shall be taken from one surface of the plate. Test-pieces “B” shall be taken from the opposite surface of the plate.

For plate material over 30 mm (1.18”) thick, the tensile specimen shall have an extension head-piece friction welded to one surface, as shown in Figure A3.2a. This figure also illustrates the test-piece’s position and size of the relative to the original plate thickness.

For plates thinner than 30 mm (1.18”) thick, a full thickness specimen shall be used with friction welded end head-pieces at either end, as shown in Figure A3.2b.

Through-thickness tests shall be made after the completion of all heat treatments.

All parties consent to this document being signed electronically -PT&CS/GP/INT/2021/3344

Figure A3. 1 Location of Through-thickness Tensile Test Specimens

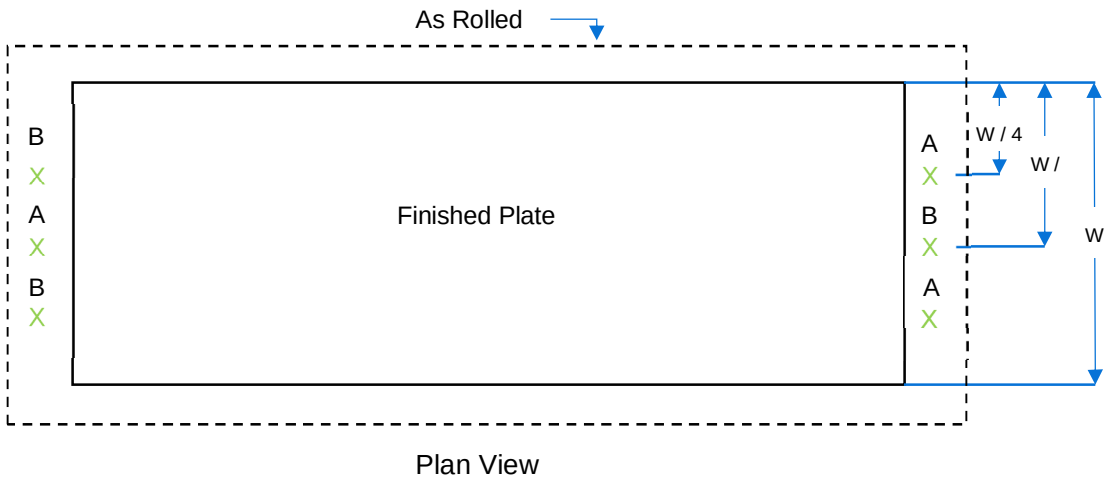

Figure A3. 2 Position and Size of Test Specimens

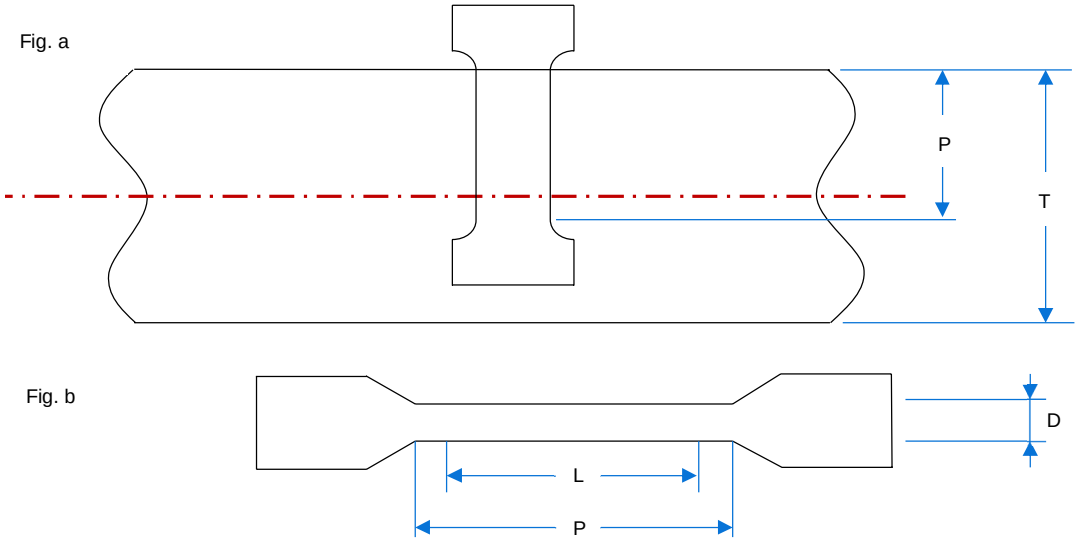

T = Plate Thickness

D = Specimen Diameter

P = Parallel Length = T / 2 + 6 mm, Minimum

L = Gauge Length = D x 3.54 = T / 2

All parties consent to this document being signed electronically -PT&CS/GP/INT/2021/3344

A3.4. Acceptance Criteria

The following reduction of area (Z direction) values shall be achieved by each the “A” and “B” locations, as per ASTM A770:

a. 35 % minimum (average); and

b. 25% minimum (any single).

In addition to the above, all the necessary tests required by the relevant material specifications shall be carried out.

All parties consent to this document being signed electronically -PT&CS/GP/INT/2021/3344

APPENDIX A4. HARDNESS TESTING

The hardness survey for PQR tests shall include the last pass and the associated HAZ. If necessary, additional points or lines of points shall be measured. NACE MR0175 / ISO 15156-2 and NACE MR0103 / ISO 17945 contains suitable survey plans for common weld geometries and for weld overlay and shall comply to as applicable. An example is copied below:

Figure A4. 1 Weld Procedure Qualification Hardness Survey

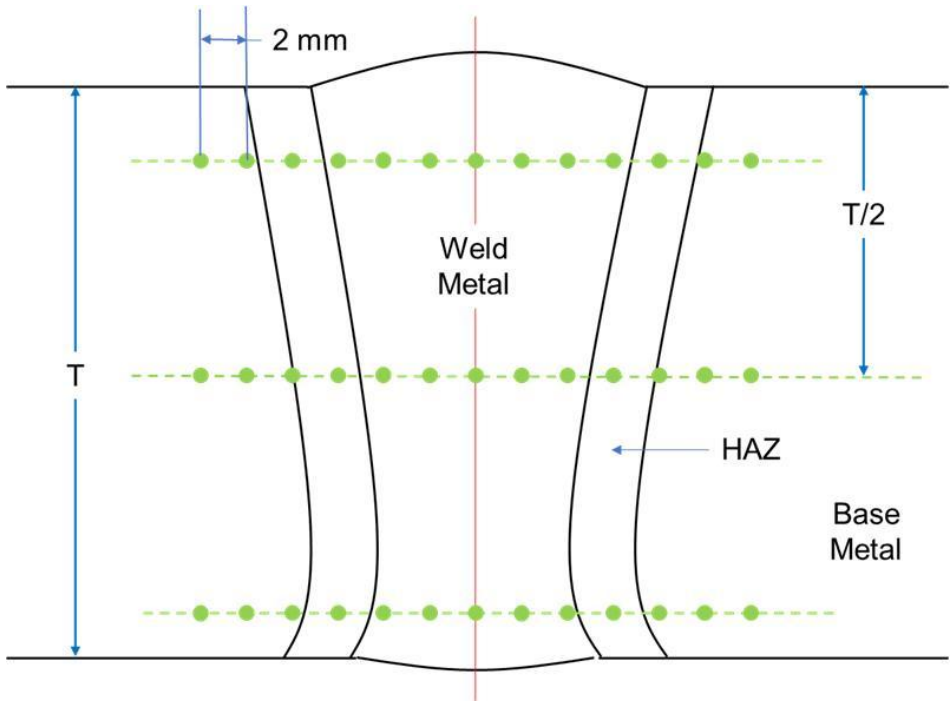

All parties consent to this document being signed electronically -PT&CS/GP/INT/2021/3344

APPENDIX A5. TESTING AND INSPECTION REQUIREMENTS FOR CS PRODUCTS IN SEVERE SERVICE

Table A5. 1 Summary of Additional Testing Requirements for Carbon Steel Products in Severe Service

Item / Component	Test Methods				Examination Methods		
	Mechanical	HIC	SSC	Hardness	VT	WFMT	RT / UT
Plate for vessels and equipment (Section 6.1)	Testing as per relevant standard and section	APPENDIX A1	Need for SSC / SOHIC testing to be determined on project-by-project basis	As per relevant NACE standard	100 %	-	UT – ASTM A578 S2.2
Seamless Pipe (Section 6.1.3.2)	Testing as per relevant standard and section	Not required if sulphur < 0.008 wt%. Otherwise as APPENDIX A1	Not required if specification is met, otherwise as per APPENDIX A2	As per relevant NACE standard	100 %	-	UT – ASTM E213
Seamless Pipe (API 5L) (Section 6.1.3.3)	Testing as per relevant standard and section			As per relevant NACE standard	100 %	-	API 5L Annex K
Welded Pipe (Section 6.1.3.4)	Testing as per relevant standard and section	APPENDIX A1	Cross-weld SCC test as per APPENDIX A2	As per relevant	100 %	Pipe end face	Plate: UT – ASTM A578 S2.2 Weld Seam: 100 % UT

All parties consent to this document being signed electronically -PT&CS/GP/INT/2021/3344

Item / Component	Test Methods				Examination Methods		
	Mechanical	HIC	SSC	Hardness	VT	WFMT	RT / UT
				NACE standard			
Welded Pipe (API 5L) (Section 6.1.3.5)	Testing as per relevant standard and section	APPENDIX A1	API 5L Annex H PSL2 (Need for SSC / SOHIC testing to be determined on project-by-project basis depending on sour severity category and service conditions)	As per relevant NACE standard	100 %	-	API 5L Annex K
Transmission Line Pipe (Section 6.1.4.1 / Section 6.1.4.2)	Testing as per relevant standard and section	APPENDIX A1	APPENDIX A2 Seamless and welded line pipe shall confirm to AGES-SP-10-001 and API 5L PSL 2 + Annex H	As per relevant NACE standard	100 %	-	As per applicable Company specification.
Forgings (Section 6.1.5)	Testing as per relevant standard and Section	-	-	As per relevant NACE standard	100 %	100 %	-
Castings (Section 6.1.6)	Testing as per relevant standard and section	-	-	As per relevant NACE standard	100 %	MSS-SP 53	As per 6.1.6, castings shall be examined for internal defects by radiography in accordance with MSS SP 54 or equivalent procedure approved by COMPANY

All parties consent to this document being signed electronically -PT&CS/GP/INT/2021/3344