ADNOC GAS OPERATIONS & MARKETING LLC

ADDENDUM TO AGES-SP-07-006 FIELD JOINT COATING FOR PIPELINE

EPCm CONTRACT NO.: 3000076501

ADNOC GAS PROJECT NO.: 30201-50150-LT-HE

LONG TERM - EXECUTE STAGE

PROJECT 5.0 (P5)

EPCm FOR HABSHAN DBN

0	ISSUED FOR CONSTRUCTION (IFC)	04-JUN-25	Dana M	Shashank S / Hashir N	Shailesh K
A	ISSUED FOR REVIEW (IFR)	09-MAY-25	Dana M	Shashank S / Hashir N	Shailesh K
REV.	DESCRIPTION	DATE	PREPARED	CHECKED	APPROVED
			wood.		

TABLE OF CONTENTS

1.0 INTRODUCTION 4
1.1 BACKGROUND 4
1.2 LONG TERM EPCM PROJECT OBJECTIVES 4
1.3 SCOPE BATTERY LIMIT 5
2.0 PURPOSE OF THIS DOCUMENT 5
3.0 DEFINITIONS 5
3.1 GENERAL DEFINITIONS 5
3.2 TECHNICAL DEFINITIONS 6
4.0 AMENDMENTS 8
4.1 AMENDMENTS TO INTER-RELATIONSHIPS AND STAKEHOLDERS 8
4.2 AMENDMENTS TO SECTION 1 – INTRODUCTION 8
4.3 AMENDMENTS TO SECTION 2 – QUALITY ASSURANCE / QUALITY CONTROL 13
4.4 AMENDMENTS TO SECTION 4 – CLASSIFICATION OF FIELD JOINT COATINGS 14
4.5 AMENDMENTS TO SECTION 6 – HEAT SHRINK COATINGS 15
4.6 AMENDMENTS TO SECTION 9 – URETHANE FILLING 17
4.7 ADDITION OF SECTION 11 – PROJECT DELIVERABLES 18
4.8 AMENDMENTS TO APPENDIX A: GENERAL COATING REQUIREMENTS 18
APPENDIX-01 AGES-SP-07-006 20

LIST OF TABLES

Table 3-1: General Definitions 5
Table 3-2: Technical Definitions 6
Table 4-1: Reference Documents 9

HOLD LIST

PARAGRAPHS HOLD IN THIS ISSUE			
Hold No.	Section / Para No.	Page No.	Holds Description

1.0 INTRODUCTION

1.1 BACKGROUND

ADNOC aims to increase oil production to produce 5.0 MMBOPD by year-end 2027. Accordingly, associated gas production is anticipated to increase. Also, to meet the future oil and gas demand, non-associated gas developments are considered. Hence, the overall gas supply scenarios for major ADNOC Gas (hereafter referred to as COMPANY) assets i.e., Das Facilities, Bab and Habshan Complex (Habshan 0, 1, 2, 4, and 5), Asab and Bu Hasa, is anticipated to change depending on their feed sources, profiles including rates, compositions, and operating conditions. These changes will also subsequently impact the COMPANY downstream facilities, particularly, products handling and transferring facilities i.e., Sales Gas Network, NGL Pipeline Network, Ruwais Fractionation Trains (1, 2, 3, 4 and upcoming new Train 5 part of Bab Cap Gas SELECT Study), Sulphur Handling Facilities, and Condensate systems, etc.

COMPANY has carried out the Long Term DEFINE for the project with M/s Amec International Ltd. (M/s Wood) and subsequently decided to proceed with Long Term EXECUTE phase execution to ensure the readiness of COMPANY facilities to accommodate increased gas supply by December 2027.

Accordingly, COMPANY has awarded EPCm contract to M/s Amec International Ltd. (M/s Wood) to carry out the Long Term scope requirements. M/s Wood shall act as a single entity in the performance of the services and a single point of accountability to ADNOC Gas for the successful completion of Long Term EXECUTE phase.

1.2 LONG TERM EPCM PROJECT OBJECTIVES

The main objective of the Long Term EPCm is to execute the Habshan DBN Project to support ADNOC to achieve oil production target of 5.0 million BOPD so that Associated and Non-Associated Gas can be processed within the overall processing capacity of Habshan. The Long Term EPCm scope includes the following major areas as a minimum:

1. Habshan Complex (H0, H1 Train 1/2, H2, H4, H3 for SS-300 Tie-in)
2. Bab CDS and Bab NGL
3. Habshan 5
4. Pipeline scope activities including below new pipelines
   I. Bab CDS to Habshan Complex HP pipeline
   II. Bab CDS to Habshan Complex MP pipelines (2 no.s)
   III. Habshan 5 to Habshan 2 pipeline

The scope also includes adequacy checks for Ruwais NGL Fractionation Trains, MERAM,

Habshan Sulphur Granulation Plant, Sales gas, NGL, Condensate and interconnecting Pipeline network and Utilities for all impacted AG facilities.

The Long Term EPCM scope includes the following major activities as a minimum:

1. Detailed Engineering and design services
2. Procurement Services
3. Construction Management services
4. Pre-commissioning, Commissioning, Start-up services
5. Final documentation handover and Project close-out

Project also involves major interface activities with other on-going projects. Refer Project Interface management plan (Doc Num: PP-30201_50150_LT_HE-GG-000-50-00-006) for complete list of interface projects.

1.3 SCOPE BATTERY LIMIT

Refer Design Basis (Doc Num: BOD-30201_50150_LT_HE-GG-000-00-00-001) for the scope battery limits, Gas allocation and detailed Design basis.

2.0 PURPOSE OF THIS DOCUMENT

The subject document is an addendum to AGES-SP-07-006 Field Joint Coating for Pipeline (Rev. 1, April 2021). This addendum defines the minimum requirements related to factory applied and field joint coatings applicable in this PROJECT.

3.0 DEFINITIONS

3.1 GENERAL DEFINITIONS

For this document, the following general definitions are applicable.

Table 3-1: General Definitions

DEFINITION	DESCRIPTION
COMPANY	ADNOC GAS (AG) for whom the SERVICES are being performed by the EPCm CONTRACTOR.
EPCm CONTRACTOR	Amec International Limited – Abu Dhabi (WOOD) appointed by COMPANY to perform Engineering, Procurement, Construction management, Pre-Commissioning and Commissioning stage for Long Term Solution (under EXECUTE phase).
FACILITIES	Habshan Complex (H0, H1 Train 1/2, H2, H4, H3 for SS-300

DEFINITION	DESCRIPTION
	Tie-in), Bab CDS, Bab NGL, Habshan 5 and interconnecting pipelines.
LICENSOR	Supplier of packaged units and responsible for the operating and design performance.
MANUFACTURER/ VENDOR/ SUPPLIER	The Party (parties) which manufactures and/or supplies material, equipment, technical documents or drawings and/or services to perform the duties specified by the COMPANY
PMC	Project Management Consultant appointed by COMPANY for the PROJECT
PMT	Project Management Team
PROJECT	PROJECT 5.0 (P5), Long Term EPCm for HABSHAN DBN
SERVICES	The scope of work to be completed during the EXECUTE stage (EPCm) of the PROJECT.
VENDOR	The party(s) which manufactures and/or supplies piping, equipment and services to perform the duties specified
SHALL	The use of the word “shall” indicate a mandatory requirement
SHOULD	The use of the word “should” indicate a strong recommendation to comply with the requirements of this document
EPCm CONSTRUCTION CONTRACTOR	Subcontractor appointed by EPCm CONTRACTOR to carry out Construction works at site for respective construction packages.
SUB-CONTRACTOR	The COMPANY approved party, which carries out services subcontracted by EPCm CONTRACTOR.

3.2 TECHNICAL DEFINITIONS

For this document, the following technical definitions are applicable.

Table 3-2: Technical Definitions

DEFINITION	DESCRIPTION
Acid Gas	A gas stream containing predominantly H_2S and/or CO_2 from an Acid Gas Removal Unit
Condensate	A hydrocarbon liquid stream containing Pentane+ compounds

DEFINITION	DESCRIPTION
Dehydrated Gas	A gas stream that has been dehydrated to remove water
Dry Gas	A gas stream containing no liquids at flowing conditions, but which may still contain water and hydrocarbons that will fall out if there is a change in flowing conditions.
Feed Gas - Associated Gas	A Gas stream that is produced from an oil well during the extraction of crude oil.
Feed Gas – Non-associated Gas	Hydrocarbon gas originating from gas reservoirs.
GMP 2023	Gas Master Plan 2023
Lean Gas	Lean nature of gas is defined based C2+ in the gas stream. If C2+ is less than 15% then stream is defined as Lean gas
Mixed Feed Gas Stream	Mixed associated and non-associated gas stream
NGL	A liquid stream with primarily C2, C3, C4 and some C5+ compounds.
Rich Gas	Rich gas is defined based C2+ in the gas stream. If C2+ is more than 15% it is considered rich gas
Sales Gas	Residue gas sent to the Sales gas network.
Sour Gas	A gas stream containing significant amounts of H_2S and/or CO_2.
Sustainable Profile (GMP 2023)	GMP 2023 High Supply Scenario – unconstrained oil production from GMP Guidelines Document from all associated gas fields
Sweet Gas	A gas stream in which the H_2S and CO_2 are not present in significant amounts.
Technical Profile	AON provided profile for technical case for associated gas.

DEFINITION	DESCRIPTION
Technical Optimized case	The ADNOC Gas facilities (Das, Asab-0/3, Buhasa, Ruwais, associated pipelines) will be sized to accommodate technical rates from associated gas fields. Habshan facilities will be sized to accommodate technical rate from all associated gas fields (Bab, Buhasa, NEB, Offshore) but not simultaneously. All inlet facilities / inlet compression shall be designed for technical rate.
Unconstrained Production Profile / High Supply Scenario	This shall be based on Upstream's OPEC Unconstrained Oil production case. This scenario corresponds to sustainable projects profiles

4.0 AMENDMENTS

The following amendments and additions shall apply to the COMPANY Field Joint Coating for Pipeline, AGES-SP-07-006 (Rev. 1, April 2021).

4.1 AMENDMENTS TO INTER-RELATIONSHIPS AND STAKEHOLDERS

Sub-section "a", bullet point "ii"

Replace: "ADNOC Gas Processing"

With: "ADNOC Gas"

4.2 AMENDMENTS TO SECTION 1 – INTRODUCTION

Replace:

"This specification covers ADNOC technical requirements for external coating of newly constructed line pipes for onshore and offshore application. This engineering specification consists of Field Joint Coating for Line Pipe."

With:

"This specification covers COMPANY technical requirements for external coating of newly constructed line pipes for onshore application. This engineering specification consists of Field Joint Coating for Line Pipe."

4.2.1 Amendments to Section 1.3.1 – General Definitions

Replace the "General Definitions" of "COMPANY", "CONTRACTOR", "MANUFACTURER/SUPPLIER" and "VENDOR/SUPPLIER" in Section 1.3.1 with Section 3.1, Table 3-1 of this document.

4.2.2 Amendments to Section 1.4 – Abbreviation Terms

Add the following abbreviations:

ASTM	American Society for Testing and Materials
DC	Direct Current
ISO	International Organization for Standardization
kV	Kilovolt
NACE	National Association of Corrosion Engineers
SSPC	Society for Protective Coatings

Delete the following abbreviations:

PE	Polyethylene
3LPE	Three-Layer Polyethylene Coating

4.2.3 Amendments to Section 1.5 – References

Add the following table:

Table 4-1: Reference Documents

Sl. No.	Document Number	Document Title
1.	BOD-30201_50150_LT_HE-GG-000-00-00-001	PROCESS DESIGN BASIS HABSHAN FACILITIES
2.	BOD-30201_50150_LT_HE-PL-000-95-00-001	PIPELINE DESIGN BASIS
3.	RPT-30201_50150_LT_HE-PL-000-63-22-001	MATERIAL SELECTION REPORT FOR PIPELINES
4.	RPT-30201_50150_LT_HE-PL-000-95-00-002	PIPELINE WALL THICKNESS CALCULATION REPORT
5.	SOW-30201_50150_LT_HE-GG-000-63-22-001	SOW FOR CATHODIC PROTECTION
6.	R-30201_50150_LT_HE-PL-000-95-00-013	MATERIAL REQUISITION FOR PIPELINE FLANGES AND FITTINGS
7.	BOQ-30201_50150_LT_HE-PL-000-95-00-001	PIPELINE MATERIAL TAKE-OFF

Sl. No.	Document Number	Document Title
8.	DOD-30201_50150_LT_HE-GG-000-63-22-001	TBE FOR CATHODIC PROTECTION
9.	30201_50150_LT_HE-H4-200-63-44-001-A3	MATERIAL SELECTION DIAGRAM UNIT 200 PIPELINE 4 SCRAPER LAUNCHER
10.	30201_50150_LT_HE-H4-113-63-44-001-A3	MATERIAL SELECTION DIAGRAM - BAB 36 MP PIPELINE
11.	30201_50150_LT_HE-H4-213-63-44-006-A3	MATERIAL SELECTION DIAGRAM - BAB 30 PIPELINE
12.	30201_50150_LT_HE-H2-027-63-44-003-A3	MATERIAL SELECTION DIAGRAM UNIT 27 PIPELINE 5 SCRAPER LAUNCHER
13.	30201_50150_LT_HE-ADD-6300-004	ADDENDUM TO DGS-6300-004 PIPELINE WELDING SPECIFICATIONS
14.	30201_50150_LT_HE-ADD-SP-07-001	ADDENDUM TO AGES-SP-07-001 CATHODIC PROTECTION SPECIFICATION
15.	30201_50150_LT_HE-ADD-SP-07-002	ADDENDUM TO AGES-SP-07-002 EXTERNAL PIPELINE COATINGS SPECIFICATION
16.	30201_50150_LT_HE-ADD-SP-10-001	ADDENDUM TO AGES-SP-10-001 SPECIFICATION FOR LINEPIPE
17.	30201_50150_LT_HE-ADD-SP-10-003	ADDENDUM TO AGES-SP-10-003 ONSHORE PIPELINES DESIGN AND CONSTRUCTION SPECIFICATION
18.	30201_50150_LT_HE-ADD-9510-004	ADDENDUM TO DGS-9510-004 FOR ONSITE, NON PIGGABLE PIPING MATERIALS
19.	30201_50150_LT_HE-ADD-SP-10-014	ADDENDUM TO AGES-SP-10-014 PIPELINE CLEANING, GAUGING, FILLING AND HYDROSTATIC TESTING
20.	30201_50150_LT_HE-H2-27-00-30-	PIPING AND INSTRUMENTATION DIAGRAM

Sl. No.	Document Number	Document Title
	101E	UNIT 27 - PIPELINE 5 SCRAPPER LAUNCHER TIE-INS (EARLY TIE-IN)
21.	30201_50150_LT_HE-H2-27-00-30-101E	PIPING AND INSTRUMENTATION DIAGRAM UNIT 27 - PIPELINE 5 SCRAPPER LAUNCHER TIE-INS (EARLY TIE-IN)
22.	30201_50150_LT_HE-H2-200-00-30-111E	PIPING AND INSTRUMENTATION DIAGRAM UNIT 200 - PIPELINE 4 SCRAPER LAUNCHER (EARLY TIE-IN)
23.	30201_50150_LT_HE-H2-200-00-30-111E	PIPING AND INSTRUMENTATION DIAGRAM UNIT 200 - PIPELINE 4 SCRAPER LAUNCHER (EARLY TIE-IN)
24.	30201_50150_LT_HE-H2-200-00-30-111E	PIPING AND INSTRUMENTATION DIAGRAM UNIT 200 - PIPELINE 4 SCRAPER LAUNCHER (EARLY TIE-IN)
25.	30201_50150_LT_HE-H5-532-00-30-018E	PIPING AND INSTRUMENT DIAGRAM UNIT 532 - THAMMAMA CD67 LEAN GAS PIPELINE 5 SCRAPER RECEIVER (EARLY TIE-IN)
26.	30201_50150_LT_HE-H5-532-00-30-018E	PIPING AND INSTRUMENT DIAGRAM UNIT 532 - THAMMAMA CD67 LEAN GAS PIPELINE 5 SCRAPER RECEIVER (EARLY TIE-IN)
27.	30201_50150_LT_HE-H5-532-00-30-018E	PIPING AND INSTRUMENT DIAGRAM UNIT 532 - THAMMAMA CD67 LEAN GAS PIPELINE 5 SCRAPER RECEIVER (EARLY TIE-IN)
28.	30201_50150_LT_HE-H5-530-00-30-018A	PIPING AND INSTRUMENTATION DIAGRAM UNIT 530-PIPELINE NO. 4AND5 CONNECTION
29.	30201_50150_LT_HE-H5-532-00-30-018	PIPING AND INSTRUMENTATION DIAGRAM UNIT 532 - THAMMAMA C D 6 7 LEAN GAS PIPELINE 5 SCRAPER RECEIVER

Sl. No.	Document Number	Document Title
30.	30201_50150_LT_HE-PL-510-00-30-001-A1	PIPING AND INSTRUMENTATION DIAGRAM - NEB RECEIVER OF NEW NEB PIPELINE
31.	30201_50150_LT_HE-PL-510-00-30-002-A1	PIPING AND INSTRUMENTATION DIAGRAM - PL-5P PIPELINE SCRAPER LAUNCHER HABSHAN 5
32.	30201_50150_LT_HE-PL-027-00-30-001-A1	PIPING AND INSTRUMENTATION DIAGRAM - PL-5P PIPELINE SCRAPER RECEIVER HABSHAN 2
33.	30201_50150_LT_HE-H5-577-00-30-001-A1	PIPING AND INSTRUMENTATION DIAGRAM UNIT 577 PL-P5 PIPELINE CONTROL VALVE

Delete (not applicable to onshore pipelines):

DNV RP F102	Pipeline Field Joint Coating and Field Repair of Line pipe Coating

4.2.4 Amendments to Section 1.6 – ADNOC Group Engineering Specification (AGES)

The addendums to the stated AGES are referenced in Table 4-1. Delete section.

4.2.5 Amendments to Section 1.7 – Document Precedence

In the 2nd paragraph, replace “CONTRACTOR” with “SUB-CONTRACTOR and MANUFACTURER / VENDOR”.

Replace the last paragraph:

"In case of conflict, […]”

With:

“In the event of any conflict between the applicable documents, the order of precedence shall be as follows:

1. UAE Statutory Legislation and Environmental Regulations
2. ADNOC HSE Regulations, HSE Standards and HSE Code of Practice
3. Data Sheets
4. Design Basis
5. Project Specifications and addendum to AGES / DGS (Note-1)
6. COMPANY Standards / Specifications and AGES / DGS (Note-1)
7. International Codes and Standards

Note-1 AGES Addendum/AGES shall be considered wherever AGES addendum/AGES is available. DGS Addendum/DGS shall be considered only in case AGES Addendum/AGES is not available.

However, in case of conflict between the various specifications, standards and the requisition, most stringent requirements shall govern. EPCm CONTRACTOR/VENDOR shall refer any such conflict, and any other matter, which requires further interpretation, to the attention of COMPANY and COMPANY's interpretation shall be final. Resolution of any conflict shall be obtained from COMPANY in writing before proceeding.

Any deviation from COMPANY standard accepted in the existing facility design shall not be considered as basis for this PROJECT design and any deviations shall be submitted to COMPANY for approval before proceeding."

4.3 AMENDMENTS TO SECTION 2 – QUALITY ASSURANCE / QUALITY CONTROL

4.3.1 Amendments to Section 2.1.2.1 – Coating System Identification

Replace:

"e. System structure (e.g., 2-layer or 3-layer)."

With:

"e. System structure (e.g., 2-layer FBE or 3-layer PP)."

4.3.2 Amendments to Section 2.1.2.3 – Coating System Qualification information

Replace:

"b. The CONTRACTOR or the coating MANUFACTURER shall show that samples of the coating system applied on pipe joints of the specified pipe material have been successfully subjected to the tests as specified in Table B, C & D whichever applicable. The tests shall be carried out by an independent test laboratory, which have ISO/IEC 17025 accreditation if approved by the COMPANY and by the coating MANUFACURER. The COMPANY/ COMAPNY appointed TPI shall witness the application and the tests. The number of pipe joints to be tested is given in Table B."

With:

"b. The EPCm CONSTRUCTION CONTRACTOR or the coating MANUFACTURER shall show that samples of the coating system applied on pipe joints of the specified pipe material have been successfully subjected to the tests as specified in Table B, C & D whichever applicable. The tests shall be carried out by an independent test laboratory, which have ISO/IEC 17025 accreditation if approved by the COMPANY and by the coating MANUFACURER. The COMPANY shall witness the application and the tests. The number of pipe joints to be tested is given in Table B."

4.4 AMENDMENTS TO SECTION 4 – CLASSIFICATION OF FIELD JOINT COATINGS

4.4.1 Amendments to Section 4.1.3 – Heat Shrink Sleeve

Replace:

"The shrink sleeve consists of a polyolefin (PE or PP) based backing with an adhesive layer (mastic or hot melt) on one side."

With:

"The shrink sleeve consists of a polyolefin (PP) based backing with an adhesive layer (mastic or hot melt) on one side."

4.4.2 Amendments to Section 4.1.4 – Polyethylene / Polypropylene tape / Sheet

Replace section heading:

"4.1.4 Polyethylene / Polypropylene tape / Sheet"

With:

"4.1.4 Polypropylene Tape / Sheet"

Replace:

"Polyethylene / Polypropylene tape / sheet shall be applied over an epoxy primer coating. The required thickness shall be achieved by wrapping the joint with polyethylene tape/sheet; either in a spiral or a single piece large enough to cover the required area."

With:

"Polypropylene tape / sheet shall be applied over an epoxy primer coating. The required thickness shall be achieved by wrapping the joint with tape/sheet; either in a spiral or a single piece large enough to cover the required area."

4.4.3 Amendments to Section 4.1.5 – Polyethylene /Polypropylene heat shrink sleeve

Replace section heading:

"4.1.5 Polyethylene /Polypropylene heat shrink sleeve"

With:

"4.1.5 Polypropylene Heat Shrink Sleeve"

Replace:

"Polyethylene /Polypropylene heat shrink sleeve is described in (6.1.3). For this coating, type a Polyethylene /Polypropylene copolymer adhesive layer and epoxy primer layer shall be used."

With:

"Polypropylene heat shrink sleeve is described in (6.1.3). For this coating, type a Polypropylene copolymer adhesive layer and epoxy primer layer shall be used."

4.5 AMENDMENTS TO SECTION 6 – HEAT SHRINK COATINGS

4.5.1 Amendments to Section 6.2 – Procedure Pre-Qualification Testing of the Approved Systems

Replace:

"Prior to the field applications MANUFACTURER/CONTRACTOR involved in the application of the field joint coating system shall perform the Procedure Qualification Tests (PQT) as given in the table C for PE HSS & Table D for PP HSS respectively. Similarly, equipment, personnel & some procedure related approvals as per section 6 shall also be confirmed during the PQT."

With:

"Prior to the field applications MANUFACTURER/ EPCm CONSTRUCTION CONTRACTOR involved in the application of the field joint coating system shall perform the Procedure Qualification Tests (PQT) as given in Table D for PP HSS. Similarly, equipment, personnel & some procedure related approvals as per section 6 shall also be confirmed during the PQT."

4.5.2 Amendments to Section 6.3 – Testing of the Applied Coating

Replace:

"The acceptance criteria shall be in accordance with Tables C & D."

With:

"The acceptance criteria shall be in accordance with Table D."

Delete:

"

Table C
Performance Parameters & Procedure Qualification Tests and Required Values for PE Heat Shrink Sleeves

Sr. No.	Property	Test Standard	Frequency	Minimum Required Values
1	Visual inspection for surface irregularities	ISO 21809-3	One every joint	No defect
2	Pull off adhesion strength of epoxy to steel at 23°C	ASTM D4541	1 Test per PQT	≥15 MPa
3	Thickness	ISO 21809-3	5 each joint	3 mm minimum
4	Holiday Detection	ISO 21809-3	100%	No defect at 5kV/mm+5Kv
5	Peel Strength at 10 mm/min to pipe	ISO 21809-3	One each joint	≥ 5 N/mm at

Sr. No.	Property	Test Standard	Frequency	Minimum Required Values
	surface and to 3 LPE Coating			230C ≥ 0.3 N /mm at 800C
6	Peel Strength to pipe surface and to 3 LPE coating after 100 days hot water immersion at 80 °C	ISO 21809-3	Type approval from accredit 3rd Party Agency	P100/P0 ≥ 0.75 at 230C
7	Impact resistance	ISO 21809-3	Each Joint of PQT	No defect at 5kV/mm+5kV
8	Indentation resistance at 80 °C	ISO 21809-3	One test per PQT	Residual thickness ≥ 0.6 mm
9	Cathodic Disbondment at 28 days	ISO 21809-3	One test per PQT	≤5mm at 23ºC ≤10mm 80 ºC
10	Elongation at break	ISO 21809-3	One test per joint	Greater than 250%
11	Lap Shear Strength at 10mm/min	ISO 21809-3	One test per PQT	≥3N/mm2 at 230C ≥0.2N/mm2 at 800C
12	Thermal Ageing, 100 days at 1000C - Elongation to break E100/E70 @ 230C - Peel strength to pipe surface P100/P70 @ 230C	ISO 21809-3	Type approval from accredit 3rd Party Agency	≥ 0.75 ≥ 0.75
13	Tensile strength	ASTM D 638	One test per PQT	Greater than 20 MPa
14	Water absorption	ASTM D570	One test per PQT	Less than 0.05% wgt
15	Overlapping on the 3 LPE	Visual	Each Joint	50 mm minimum
16	Hot water soak test for epoxy at 80 °C for 28 days	API RP 5L9	One test on epoxy only	No loss of adhesion
17	Adhesion liquid epoxy to existing factory applied FBE	ASTM D 4541	3 test points	Greater than 750 psi
18	Destructive testing	This Specification	One complete joint	Even distribution of primer and adhesive.

“

4.5.3 Amendments to Section 6.3.8 – Hot Water Soak

Replace:

"The adhesion of the shrink sleeve to the pipe steel, the weld and the pipe coating shall be more than 2.5 N/mm (14.3 lbf/in) for PE backed sleeves and more than 4.0 N/mm (22.8 lbf/in) for PP backed sleeves when tested in accordance with (Annex B.9)."

With:

"The adhesion of the shrink sleeve to the pipe steel, the weld and the pipe coating shall be more than 4.0 N/mm (22.8 lbf/in) for PP backed sleeves when tested in accordance with (Annex B.9)."

4.5.4 Amendments to Section 6.3.9 – Cathodic Disbonding Resistance

Replace:

"Cathodic disbonding shall be tested in accordance with (Annex B.6) at a test temperature related to the Maximum Design temperature as specified in Tables C & D. The duration of the test shall be 28 days. After the test, the maximum radius of disbonding shall be less than the value given in Tables C & D."

With:

"Cathodic disbonding shall be tested in accordance with (Annex B.6) at a test temperature related to the Maximum Design temperature as specified in Table D. The duration of the test shall be 28 days. After the test, the maximum radius of disbonding shall be less than the value given in Table D."

4.5.5 Amendments to Section 6.3.10 – Thermal Ageing

Replace:

"Thermal ageing resistance shall be tested in accordance with (Annex B.12) at a test temperature related to the Maximum Design temperature with a ± 2 ˚C (3.6˚F) tolerance. The duration of the test for coating qualification shall be 100 days. After the exposure, the coating shall show no significant evidence (less than 10 % of the test area) of blistering or disbonding. Acceptance values are given in Tables C & D for PE & PP respectively."

With:

"Thermal ageing resistance shall be tested in accordance with (Annex B.12) at a test temperature related to the Maximum Design temperature with a ± 2 ˚C (3.6˚F) tolerance. The duration of the test for coating qualification shall be 100 days. After the exposure, the coating shall show no significant evidence (less than 10 % of the test area) of blistering or disbonding. Acceptance values are given in Table D for PP."

4.6 AMENDMENTS TO SECTION 9 – URETHANE FILLING

Delete section.

4.7 ADDITION OF SECTION 11 – PROJECT DELIVERABLES

Add:

"The minimum project deliverables during the Execution phase shall be as follows:

1. ITP for Field Joint Coating for HSS, HDD & Repair of 3LPE Coated Line Pipe;
2. Application Procedure for HSS System For FJC, HDD & Repair Of 3LPP Coated Line Pipe;
3. Quality Control Procedure For 3LPP Line Pipe Coating Repair for Main Line & HDD Sections;
4. Material Approval Request For 3LPP Main Line Coating Repair Materials;
5. Final PQT Report (Site PQT Test results and 3rd party Lab Test results) for Heat shrink Sleeves for Field Joint Coating;
6. Quality Control Plan for Heat Shrink Sleeves Manufacturing;
7. Packing, Handling, Storage and Preservation Procedure for Heat Shrink Sleeves for Field Joint Coating and Sleeves for HDD Sections;
8. Pre-Shipment Inspection and Test Plan at Manufacturer for Heat Shrink Sleeves for Field Joint Coating and Sleeves for HDD Sections;
9. Product and Safety Data Sheet for Heat Shrink Sleeves for Field Joint Coating for HDD Sections;
10. Material Approval Request for Blasting Abrasive for Pipeline/Piping;
11. Material Approval Request For GARNET;
12. Material Approval Request for Abrasive Resistant Overcoat."

4.8 AMENDMENTS TO APPENDIX A: GENERAL COATING REQUIREMENTS

Replace:

Design Temperature	Coating General Requirements
≤ 80°C	- 3LPE coating shall be used - Thickness shall be minimum 3 mm & with accordance to ISO 21809-3. - T_{g2} of FBE primer shall be min. 5°C above the pipeline design temperature - Field joint coating shall be PE heat shrink sleeve and epoxy primer with the same characteristics. - Coating repairs at shop & field shall be proposed by the CONTRACTOR & shall be part of PQT - Above ground portions of the pipeline shall be protected against UV using a long term UV resistant cold wrapping tape or equivalent suitable for 80°C

Design Temperature	Coating General Requirements
≤ 105°C	- 3LPP coating shall be used. - Thickness shall be minimum 3 mm & with accordance to ISO 21809-3. - T_{g2} of FBE primer shall be min. 5°C above the pipeline design temperature. - Field joint coating shall be PP heat shrink sleeve and epoxy primer with the same characteristics. - Coating repairs at shop and field shall be proposed by the CONTRACTOR and shall be part of the PQT. - Above ground portions of the pipeline shall be protected against UV using a long term UV resistant cold wrapping tape or equivalent suitable for 100°C
≤ 120°C	- 2LFBE coating shall be used - Thickness shall be 2 x 400 µm - T_{g2} of the first layer shall be min. 5°C above the pipeline design temperature. - Field joint coating shall be a spray applied liquid epoxy or FBE - Coating repairs at shop & field shall be proposed by the CONTRACTOR & shall be part of PQT - Above ground portions of the pipeline shall be protected against UV using a long term UV resistant cold wrapping tape or polyurethane paint suitable for 120°C

With:

Design Temperature	Coating General Requirements
≤ 110°C	- 3LPP coating shall be used. - Thickness shall be minimum 3 mm & with accordance to ISO 21809-3. - T_{g2} of FBE primer shall be min. 5°C above the pipeline design temperature. - Field joint coating shall be PP heat shrink sleeve and epoxy primer with the same characteristics. - Coating repairs at shop and field shall be proposed by the EPCm CONSTRUCTION CONTRACTOR and shall be part of the PQT. - Above ground portions of the pipeline shall be protected against UV using a long term UV resistant cold wrapping tape or equivalent suitable for 110°C
≤ 120°C	- 2LFBE coating shall be used - Thickness shall be 2 x 400 µm - T_{g2} of the first layer shall be min. 5°C above the pipeline design temperature. - Field joint coating shall be a spray applied liquid epoxy or FBE - Coating repairs at shop & field shall be proposed by the EPCm CONSTRUCTION CONTRACTOR & shall be part of PQT - Above ground portions of the pipeline shall be protected against UV using a long term UV resistant cold wrapping tape or polyurethane paint suitable for 120°C

APPENDIX-01 AGES-SP-07-006

THE CONTENTS OF THIS DOCUMENT ARE PROPRIETARY AND CONFIDENTIAL.

أدنوك
ADNOC

ADNOC GROUP PROJECTS AND ENGINEERING

FIELD JOINT COATING FOR PIPELINE

Specification

APPROVED BY:

Abdulmunim Saif Al Kindy

NAME: Abdulmunim Al Kindy
TITLE: Executive Director PT&CS
EFFECTIVE DATE:

AGES-SP-07-006

ص ب 898، أبوظبي، الإمارات العربية المتحدة
PO Box 898, Abu Dhabi, UAE
adnoc.ae

شركة بترول أبوظبي الوطنية
Abu Dhabi National Oil Company

All parties consent to this document being signed electronically - PT&CS/OR/INT/2021/3690

GROUP PROJECTS & ENGINEERING / PT&CS DIRECTORATE

CUSTODIAN	Group Projects & Engineering / PT&CS
ADNOC	Specification applicable to ADNOC & ADNOC Group Companies

REVISION HISTORY

DATE	REV. NO	PREPARED BY (Designation / Initial)	REVIEWED BY (Designation / Initial)	ENDORSED BY (Designation / Initial)	ENDORSED BY (Designation / Initial)
05 April 2021	1	Dr Maher M. Nour Specialist Corrosion & Material (Project Support) Dr. Maher M. Nour Digitally signed by Dr. Maher M. Nour Date: 2021.04.07 11:15:23 +04'00'	Hesham ELASHKAR Senior Specialist, Material Engineering (ADNOC / GPE) Digitally signed by Hesham ELASHKAR DN: cn=Hesham ELASHKAR, o=ADNOC, ou=PC&TS / GP&E, email=helashkar2@adnoc.ae, c=AE Date: 2021.04.07 11:28:34 +04'00' Wael Al Shouly Head of Discipline, Material Engineering (ADNOC / GPE) Digitally signed by Wael Alshouly Date: 2021.04.07 12:34:39 +04'00'	Najem Qambar Head of Functions Discipline Engineering (ADNOC / GPE) Digitally signed by Najerm A. Qambar DN: cn=Najerm A. Qambar, o=ADNOC, ou=GPE, email=najemaq@adnoc.ae, c=AE Date: 2021.04.07 13:33:53 +04'00'	Zaher Salem/ (SVP-GPE) 08/04/2021

Group Projects & Engineering is the owner of this Specification and responsible for its custody, maintenance and periodic update.

In addition, Group Projects & Engineering is responsible for communication and distribution of any changes to this Specification and its version control.

This specification will be reviewed and updated in case of any changes affecting the activities described in this specification.

All parties consent to this document being signed electronically - PT&CS/GR/INT/2021/3690

INTER-RELATIONSHIPS AND STAKEHOLDERS

a. The following are inter-relationships for implementation of this Specification:
   i. ADNOC Upstream and ADNOC Downstream Directorates; and
   ii. ADNOC Onshore, ADNOC Offshore, ADNOC Sour Gas, ADNOC Gas Processing. ADNOC LNG, ADNOC Refining, Fertil, Borouge, Al Dhafra Petroleum, Al Yasat
b. The following are stakeholders for the purpose of this Specification:
   i. ADNOC PT&CS Directorate
c. This Specification has been approved by the ADNOC PT&CS is to be implemented by each ADNOC Group company included above subject to and in accordance with their Delegation of Authority and other governance-related processes in order to ensure compliance.
d. Each ADNOC Group company must establish/nominate a Technical Authority responsible for compliance with this Specification.

DEFINITIONS

"**ADNOC**" means Abu Dhabi National Oil Company.

"**ADNOC Group**" means ADNOC together with each company in which ADNOC, directly or indirectly, controls fifty percent (50%) or more of the share capital.

"**Approving Authority**" means the decision-making body or employee with the required authority to approve Policies & Procedures or any changes to it.

"**Business Line Directorates**" or "**BLD**" means a directorate of ADNOC which is responsible for one or more Group Companies reporting to, or operating within the same line of business as, such directorate.

"**Business Support Directorates and Functions**" or "**Non- BLD**" means all the ADNOC functions and the remaining directorates, which are not ADNOC Business Line Directorates.

"**CEO**" means chief executive officer.

"**Group Company**" means any company within the ADNOC Group other than ADNOC.

"Specification" means this Requirements for Cr-Mo / Cr-MoV Steel in High Temperature, High Pressure Hydrogen Service Specification.

CONTROLLED INTRANET COPY

The intranet copy of this document located in the section under Group Policies on One ADNOC is the only controlled document. Copies or extracts of this document, which have been downloaded from the intranet, are uncontrolled copies and cannot be guaranteed to be the latest version.

All parties consent to this document being signed electronically - PT&CS/GR/INT/2021/3690

TABLE OF CONTENTS

1. INTRODUCTION 9
1.1 SCOPE 9
1.2 DISTRIBUTION, INTENDED USE AND REGULATORY CONSIDERATION 9
1.3 DEFINITION, ABBREVIATIONS AND REFERENCES 10
1.3.1 GENERAL DEFINITIONS 10
1.3.2 SPECIFIC DEFINITIONS 10
1.4 ABBREVIATION TERMS 12
1.5 REFERENCES 13
1.6 ADNOC GROUP ENGINEERING SPECIFICATION (AGES) 16
1.7 DOCUMENT PRECEDENCE 16
1.8 SPECIFICATION CONCESSION / DEVIATION CONTROL 16
2. QUALITY ASSURANCE / QUALITY CONTROL 17
2.1 GENERAL DEFINITION 17
2.1.1 INFORMATION TO BE SUPPLIED BY THE CONTRACTOR 17
2.1.2 INFORMATION TO BE SUBMITTED BY THE APPLICATOR 18
2.1.2.1 COATING SYSTEM IDENTIFICATION 18
2.1.2.2 MANUFACTURER'S DATA 19
2.1.2.3 COATING SYSTEM QUALIFICATION INFORMATION 21
2.2 DOCUMENTATION 21
2.2.1 QUALIFICATION RECORDS 21
2.2.2 FIELD RECORDS 22
2.3 PRE- JOB MEETING 22
2.4 QUALITY CONTROL PERSONAL 23
3. APPLICATION PROCEDURES AND QUALIFICATION 23
3.1 APPLICATION PROCEDURE SPECIFICATION (APS) 23
3.2 COATING SYSTEMS 24
3.3 PROCEDURE QUALIFICATION TEST (PQT) 24
3.3.1 APPLICATOR QUALIFICATION 26
3.4 PRE-PRODUCTION TEST (PPT) 27
3.5 PRODUCTION TESTING AND INSPECTION 27
3.6 CERTIFICATE OF COMPLIANCE AND TRACEABILITY 27
3.7 MARKING 28

All parties consent to this document being signed electronically - UP&C/JOR/INT/2021/3690

4. CLASSIFICATION OF FIELD JOINT COATINGS 28
4.1 COATING TYPES 28
4.1.1 LIQUID EPOXY 28
4.1.2 LIQUID POLYURETHANE 28
4.1.3 HEAT SHRINK SLEEVE 28
4.1.4 POLYETHYLENE / POLYPROPYLENE TAPE / SHEET 29
4.1.5 POLYETHYLENE /POLYPROPYLENE HEAT SHRINK SLEEVE 29
4.1.6 FUSION BONDED EPOXY 29
4.2 TEMPERATURE 29
4.3 PIPE COATING COMPATIBILITY 29
4.4 PIPELINE DIAMETER 29
5. GENERAL REQUIREMENT FOR SURFACE PREPARATION, COATING APPLICATION, TEST AND REPAIRS 30
5.1 FIELD JOINT COATING INSTALLATION 30
5.2 QUALITY CONTROL DURING FIELD APPLICATION 31
5.2.1 GENERAL 31
5.2.2 AMBIENT CONDITIONS 32
5.2.3 INSPECTION OF UNCOATED JOINTS BEFORE BLASTING 32
5.2.4 PREPARATION OF FACTORY APPLIED COATING TRANSITION AREA 33
5.2.5 BLAST CLEANING 33
5.2.6 INSPECTION AFTER BLASTING 34
5.2.7 SALT CONTAMINATION ASSESSMENT 34
5.2.8 COATING APPLICATION TEMPERATURE 34
5.2.9 APPEARANCE, THICKNESS AND HOLIDAYS 34
5.2.10 DESTRUCTIVE ADHESION TESTING 35
5.2.11 ACCEPTANCE OF FAILED JOINTS 35
6. HEAT SHRINK COATINGS 38
6.1 APPLICATION OF THE COATING 38
6.1.1 GENERAL 38
6.1.2 APPLICATION OF THE PRIMER 39
6.1.3 APPLICATION OF HEAT SHRINKABLE MATERIAL 39
6.1.4 OVERLAP 40
6.2 PROCEDURE PRE-QUALIFICATION TESTING OF THE APPROVED SYSTEMS 40
6.3 TESTING OF THE APPLIED COATING 40

All parties consent to this document being signed electronically - UP&C/JOR/INT/2021/3690

6.3.1 VISUAL APPEARANCE 44
6.3.2 TOTAL THICKNESS 44
6.3.3 HOLIDAYS 45
6.3.4 ADHESION 45
6.3.5 LAP SHEAR STRENGTH 45
6.3.6 IMPACT RESISTANCE 45
6.3.7 INDENTATION RESISTANCE 45
6.3.8 HOT WATER SOAK 46
6.3.9 CATHODIC DISBONDING RESISTANCE 46
6.3.10 THERMAL AGEING 46
6.3.11 DESTRUCTIVE TESTING 46
6.3.12 AIR VOIDS 47
6.3.13 HARDNESS 47
6.3.14 REPAIRS 47
6.4 INSPECTION OF THE APPLIED SYSTEMS 48
7. FUSION – BONDED EPOXY (FBE) POWDER COATINGS 49
7.1 COATING IDENTIFICATION 49
7.2 DESCRIPTION OF THE COATINGS 49
7.3 SURFACE PREPARATION 50
7.4 APPLICATION OF THE COATINGS 50
7.4.1 GENERAL 50
7.4.2 TRANSPORT AND STORAGE OF EPOXY POWDER 50
7.4.3 HEATING 50
7.4.4 APPLICATION OF EPOXY POWDER 51
7.4.5 FIELD JOINT COATING REPAIRS 51
7.5 TESTING OF THE APPLIED COATINGS 52
7.5.1 VISUAL APPEARANCE 53
7.5.2 COATING THICKNESS 53
7.5.3 HOLIDAYS 53
7.5.4 ADHESION 54
7.5.5 IMPACT RESISTANCE 54
7.5.6 INDENTATION RESISTANCE 54
7.5.7 FLEXIBILITY 54
7.5.8 HOT WATER SOAK 54

All parties consent to this document being signed electronically - UP&C/JOR/INT/2021/3690

7.5.9 CATHODIC DISBONDING RESISTANCE 55
7.5.10 THERMAL AGEING 55
7.5.11 DEGREE OF CURE 56
7.5.12 MICROSCOPIC EXAMINATION 56
7.5.13 GOUGE TESTING 56
8. LIQUID COATINGS 56
8.1 COATING IDENTIFICATION 56
8.2 DESCRIPTION OF THE COATINGS 56
8.3 SURFACE PREPARATION 56
8.4 APPLICATION OF THE COATING 57
8.4.1 GENERAL 57
8.4.2 HEATING 57
8.4.3 LIQUID COATINGS APPLICATION 57
8.5 TESTING OF THE APPLIED COATINGS 57
8.5.1 VISUAL APPEARANCE 58
8.5.2 COATING THICKNESS 59
8.5.3 HOLIDAYS 59
8.5.4 SHORE D HARDNESS 59
8.5.5 ADHESION 59
8.5.6 IMPACT RESISTANCE 59
8.5.7 INDENTATION RESISTANCE 60
8.5.8 FLEXIBILITY 60
8.5.9 HOT WATER RESISTANCE 60
8.5.10 CATHODIC DISBONDING RESISTANCE 60
8.5.11 THERMAL AGEING 61
9. URETHANE FILLING 61
10. COATING MATERIALS HANDLING & STORAGE 62
APPENDIX A: GENERAL COATING REQUIREMENTS 62
APPENDIX B: TEST METHOD 63
B.1 INSPECTION OF THICKNESS 63
B.2 HOLIDAY DETECTION TEST 64
B.3 ADHESION TEST – RESISTANCE TO REMOVAL 65
B.4 PEEL STRENGTH TEST 67
B.5 THERMAL ANALYSIS OF EPOXY POWDER AND CURED COATING FILM (FBE) 70

All parties consent to this document being signed electronically - UP&C/JOR/INT/2021/3690

B.6 CATHODIC DISBONDMENT TEST 74
B.7 IMPACT TEST 79
B.8 INDENTATION TEST 81
B.9 HOT-WATER IMMERSION TEST 83
B.10 LAP SHEAR STRENGTH 85
B.11 PEEL STRENGTH BETWEEN LAYERS 88
B.12 THERMAL AGEING RESISTANCE 92
B.13 FLEXIBILITY TESTING 96

All parties consent to this document being signed electronically - UPTC/JOR/INT/2021/3690

1. INTRODUCTION

This specification covers ADNOC technical requirements for external coating of newly constructed line pipes for onshore and offshore application. This engineering specification consists of Field Joint Coating for Line Pipe.

CWC (Concrete weight coating) and Insulated Pipeline field joint coatings are not under part of this specification and requires prior COMPNAY approval.

It is also specifying different types of coating materials suitable for several categories of pipeline design temperature up to 120 °C for corrosion protection of welded and seamless pipes for pipeline transportation systems. The main purpose of this specification is to provide all requirements related to factory applied and field joint coatings.

The general coating requirements are summarized in Annex A.

1.1 Scope

This part of ADNOC specifications includes requirements for field joint coating of seamless or welded steel pipes for pipeline transportation systems in the petroleum and natural gas industries. It also specifies the qualification, application and testing of the corrosion protection coatings applied to steel surfaces left bare after the pipes and fittings (components) are joined by welding. Field joint coating material shall be fit for pipelines design temperature.

1.2 Distribution, Intended Use and Regulatory Consideration

Unless otherwise authorized by ADNOC, the distribution of this specification is confined to companies forming part of the Abu Dhabi National Oil Company and to CONTRACTOR's and MANUFACTURER's/SUPPLIER's nominated by them. This specification is intended to be used by all involved in the design, procurement, manufacturing, coating and transport of coated line pipe for oil and gas production.

If national and/or local regulations exist in which some of the requirements may be more stringent than the ones in this document, the CONTRACTOR shall determine by careful scrutiny which of the requirements are the more stringent and which combination of requirements will be acceptable as regards safety, environmental, economic and legal aspects. In all cases the CONTRACTOR shall inform the COMPANY of any deviations from the requirements of this specification which are considered to be necessary in order to comply with national and/or local regulations. The COMPANY may then negotiate with the authorities concerned with the object of obtaining agreement to follow this specification.

All parties consent to this document being signed electronically - UP&C/JOR/INT/2021/3690

1.3 Definition, Abbreviations and References

1.3.1 General Definitions

COMPANY	ADNOC Group
CONTRACTOR	The party who carries out all or part of the design, engineering, procurement, construction, commissioning or management of the project
MANUFACTURER/SUPPLIER	COMPANY responsible for the manufacture of coating material(s).
VENDOR/ SUPPLIER	The party that manufacturers or supplies equipment and services to perform the duties part of the project.
Third Party Agency	The agency or agencies appointed or nominated to certify the equipment or parts thereof by reference to the standards given in all relevant designs, specifications or procedural documents.
May	Used where alternatives are equally acceptable.
Should	Indicates a strong recommendation to comply with the requirements of this document.
Shall	Indicates mandatory requirement.
Acceptance Criteria	Defined limits placed on characteristics of materials, products or services.
Inspector	Individuals / party designated by the COMPANY to act on behalf of the COMPANY for monitoring CONTRACTOR's quality control testing and technical acceptance.

1.3.2 Specific Definitions

Adhesion	Bond between coating and substrate after environmental testing.
Application Procedure Specification APS	Document describing procedures, methods, equipment and tools used for coating application.
APPLICATOR	COMPANY that undertakes the coating application in accordance with the provisions of this specifications.
Batch	Quantity of material produced in a continuous manufacturing operation using raw materials of the same source and grade
Batch Certificate	Certificate of analysis issued by the manufacturer.

All parties consent to this document being signed electronically - UP&C/JOR/INT/2021/3690

Bonding Agent	Material applied as a film to the primed metal surface in order to ensure adhesion of the subsequent protective coating.
Certificate of Compliance	One of the types of inspection documents defined by ISO 10474, issued in accordance with the purchasing requirements.
Coating Operative	Individual undertaking coating activity on the work site, including surface preparation.
Cutback	Length of pipe left uncoated at each end for joining purposes (e.g. welding).
Field Joint Area (weld zone)	Uncoated area that results when two pipe sections or a pipe section and a fitting with coating cutbacks are assembled, by welding, in the field.
Holiday	Coating discontinuity that exhibits electrical conductivity when exposed to a specific voltage.
Inspection and Testing Plan ITP	Document providing an overview of the sequence of inspections and tests, including resources and procedures.
Inspector	COMPANY and CONTRACTOR representative responsible for one or more of the inspections specified in this document.
Maximum Design Temperature of Field Joint Coating *T* max	Maximum continuous temperature that the field joint coating can resist.
Maximum Operating Temperature	Maximum temperature that can be reached during operation of pipeline.
Overlap	Length of the field joint coating over the plant-applied coating including the coating bevel.
Pipeline	Those facilities through which fluids are conveyed, including pipe, pig traps, components and appurtenances, up to and including the isolating valves.
Pipeline System	Pipeline with compressor or pump stations, pressure control stations, flow control stations, metering, tankage, supervisory control and data acquisition system (SCADA), safety systems, corrosion protection systems, and any other equipment, facility or building used in the transportation of fluids.
Primer	Material applied as a film on substrate (metal and/or plant coating) to ensure adhesion of the subsequent protective coating.

All parties consent to this document being signed electronically - UPTC/JOR/INT/2021/3690

Procedure Qualification Test PQT	Application of a field joint coating and subsequent inspection/testing of its properties, to confirm that the APS is able to produce a coating with the specified properties, carried out at the premises of the APPLICATOR or any other agreed location.
Pre-Production Trial (PPT)	Application of a field joint coating and subsequent inspection/testing of its properties, to confirm that the APS is adequate to produce a field joint coating with the specified properties, carried out in the coating plant immediately prior the start of production and to verify that the plant's equipment is adequate to consistently adhere to the APS requirements.
Quality Assurance (QA)	All those planned and systematic actions (QA) necessary to assure quality, i.e. to provide adequate confidence that a product or service will be fit for its intended purpose.
Quality Manual	A Document setting out the general quality policies, procedures and practices of an organization.
Quality Plan	A document prepared by the CONTRACTOR/VENDOR setting out the specific quality practices, resources and activities relevant to a particular project.
Quality Management System	The structure organization, responsibilities, activities, resources and events that together provide organized procedures and methods of implementation to ensure the capability of the organization to meet quality requirements.
Wraparound sleeve	Sleeve that is wrapped, circumferentially, around the steel pipe area being coated.

1.4 Abbreviation Terms

AFC	Approved for Construction
APS	Application Procedure Specification
ARO	Abrasion Resistant Outer
DFT	Dry Film Thickness
DN	Diameter Nominal (mm)
DSC	Differential Scanning Calorimetry
EP	Epoxy
FBE	Fusion-Bonded Epoxy

All parties consent to this document being signed electronically - UP&C/JOR/INT/2021/3690

FJC	Field Joint Coating
HDD	Horizontal Directional Drilling
HSS	Heat-Shrink Sleeve
ITP	Inspection and Testing Plan
LE	Liquid Epoxy
MSDS	Material Safety Data Sheet
PE	Polyethylene
PP	Polypropylene
PQT	Procedure Qualification Trial
PU	Polyurethane
UV	Ultraviolet Light
3LPE	Three-Layer Polyethylene Coating
3LPP	Three-Layer Polypropylene Coating

1.5 References

DEP 31.40.30.37-Gen.	External Field Joint and Rehabilitation Coating Systems for Lin Pipe (Amendments/Supplements to ISO 21809-3).
ISO 21809-3	Petroleum and natural gas industries — External coatings for buried or submerged pipelines used in pipeline transportation systems — Part 3: Field joint coatings.
ISO 8501-1	Preparation of steel substrates before application of paints and related products — Visual assessment of surface cleanliness — Part 1: Rust grades and preparation grades of uncoated steel substrates and of steel substrates after overall removal of previous coatings.
ISO 8501-3	Preparation of steel substrates before application of paints and related products — Visual assessment of surface cleanliness — Part 3: Preparation grades of welds, edges and other areas with surface imperfections.
ISO 8502-3	Preparation of steel substrates before application of paints and related products — Tests for the assessment of surface

All parties consent to this document being signed electronically - UP&C/JOR/INT/2021/3690

	cleanliness — Part 3: Assessment of dust on steel surfaces prepared for painting (pressure-sensitive tape method).
ISO 8502-6	Preparation of steel substrates before application of paints and related products — Tests for the assessment of surface cleanliness — Part 6: Extraction of soluble contaminants for analysis — The Bresle method.
ISO 8502-9	Preparation of steel substrates before application of paints and related products — Tests for the assessment of surface cleanliness — Part 9: Field method for conductometric determination of water-soluble salts.
ISO 8503 (all parts)	Preparation of steel substrates before application of paints and related products — Surface roughness characteristics of blast-cleaned steel substrates.
ISO 8504-3	Preparation of steel substrates before application of paints and related products — Surface preparation methods — Part 3: Hand- and power-tool cleaning.
ISO 11124 (all parts)	Preparation of steel substrates before application of paints and related products — Specifications for metallic blast-cleaning abrasives.
ISO 11126 (all parts)	Preparation of steel substrates before application of paints and related products — Specifications for non-metallic blast-cleaning abrasives.
ISO 11357-2	Plastics — Differential scanning calorimetry (DSC) — Part 2: Determination of glass transition temperature.
ISO 11357-6	Plastics — Differential scanning calorimetry (DSC) — Part 6: Determination of oxidation induction time (isothermal OIT) and oxidation induction temperature (dynamic OIT).
ISO/IEC 17025	Testing and Calibration Laboratories
ISO 19011	Guidelines for Auditing Management Systems
ISO 9004	Quality Management – Quality of an Organization – Guidance to Achieve Sustained Success
ISO 21809-2	Petroleum and natural gas industries — External coatings for buried and submerged pipelines used in pipeline transportation systems — Part 2: Fusion-bonded epoxy coatings.
ASTM D149	Standard Test Method for Dielectric Breakdown Voltage and Dielectric Strength of solid Electrical Insulating Materials at Commercial Power Frequencies

All parties consent to this document being signed electronically - UP&C/JOR/INT/2021/3690

ASTM D257	Standard Test Methods for DC Resistance or Conductance of Insulating Materials.
ASTM D2240	Standard Test Method for Rubber Property—Durometer Hardness.
ASTM D3418	Standard Test Method for Transition Temperatures of Polymers by Differential Scanning Calorimetry
ASTM D3417	Standard Test Method for Enthalpies of Fusion and Crystallization of Polymers by Differential Scanning Calorimetry (DSC)
ASTM D4285	Standard Test Method for Indicating Oil or Water in Compressed Air.
ASTM D4541	Standard Test Method for Pull-off Strength of Coatings Using Portable Adhesion Testers.
ASTM D4703	Standard Practice for Compression Moulding Thermoplastic Materials into Test Specimens, Plaques or Sheets
ASTM F372	Standard Test Method for Water Vapor Transmission Rate of Flexible Barrier Materials Using an Infrared Detection Technique
ASTM G14	Standard Test Method for Impact Resistance of Pipeline Coatings (Falling Weight Test)
ASTM G42	Standard Test Method for Cathodic Disbonding of Pipeline Coatings Subjected to Elevated Temperatures
ASTM G95	Standard Test Method for Cathodic Disbondment Test of Pipeline Coatings (Attached Cell Method)
BS EN 12068	Cathodic protection. External organic coatings for the corrosion protection of buried or immersed steel pipelines used in conjunction with cathodic protection. Tapes and shrinkable materials
SSPC-SP1	Surface preparation specification No.1 — Solvent cleaning
SSPC-Guide 15	Field Methods for Extraction and Analysis of Soluble Salts on Steel and Other Nonporous substrates.
NACE SP 0274	High Voltage Electrical Inspection of Pipeline Coatings Prior to Installation
DNV RP F102	Pipeline Field Joint Coating and Field Repair of Line pipe Coating

All parties consent to this document being signed electronically - UP&C/JOR/INT/2021/3690

1.6 ADNOC Group Engineering Specification (AGES)

AGES-SP-07-002	External Pipelines Coatings
AGES-SP-07-001	Cathodic Protection Specification

1.7 Document Precedence

The specifications and codes referred to in this specification shall, unless stated otherwise, be the latest approved issue at the time of Purchase Order placement.

It shall be the CONTRACTOR 'S responsibility to be, or to become, knowledgeable of the requirements of the referenced Codes and Standards.

The CONTRACTOR shall notify the COMPANY of any apparent conflict between this specification, the related data sheets, the Codes and Standards and any other specifications noted herein.

Resolution and/or interpretation precedence shall be obtained from the COMPANY in writing before proceeding with the design/manufacture.

In case of conflict, the order of document precedence shall be:

(a) UAE Statutory requirements

(b) ADNOC Codes of Practice

(c) Equipment datasheets and drawings

(d) Project Specifications and standard drawings

(e) COMPANY Specifications

(f) National/International Standards

1.8 Specification Concession / Deviation Control

Deviations from this specification are only acceptable where the MANUFACTURER has listed in his quotation the requirements he cannot, or does not wish to comply with, and the COMPANY/CONTRACTOR has accepted in writing the deviations before the order is placed.

In the absence of a list of deviations, it will be assumed that the MANUFACTURER complies fully with this specification.

Any technical deviations to the Purchase Order and its attachments including, but not limited to, the Data Sheets and Narrative Specifications shall be sought by the VENDOR only through Concession Request Format. Concession requests require CONTRACTOR'S and

All parties consent to this document being signed electronically - UP&C/JOR/INT/2021/3690

COMPANY'S review/approval, prior to the proposed technical changes being implemented. Technical changes implemented prior to COMPANY approval are subject to rejection.

2. Quality Assurance / Quality Control

Quality Management Systems shall comply with the applicable requirements of ISO 9001 and ISO 9004 with due regard to ISO 19011. The CONTRACTOR shall ensure that the VENDOR shall have in effect at all times, a QA program, which clearly establishes the authority and responsibilities of those responsible for the quality system. Persons performing quality functions shall have sufficient and well-defined authority to enforce quality requirements that they initiate or identify and to recommend and provide solutions for quality problems and thereafter verify the effectiveness of the corrective action.

Quality System and Quality Control requirements shall be identified and included in the CONTRACTOR's Purchase and Subcontracting DOCUMENT(s). Based on these requirements the VENDOR & SUBCONTRACTOR shall develop a QA/QC program which shall be submitted to the CONTRACTOR for review and approval. The VENDOR's QA/QC program shall extend to his SUB-VENDORS. COMPANY/CONTRACTOR reserves the right to inspect materials and workmanship at all stages of manufacture and to witness any or all tests.

2.1 General Definition

2.1.1 Information to be Supplied by the CONTRACTOR

- Project name.
- Line pipe coating cut back length.
- Type and thickness of the line pipe coating.
- Type of field joint coating system.
- Thickness of the field joint coating (if applicable).
- Maximum operating temperature of the pipeline.
- Subsequent coatings to be applied (e.g., weight coating, insulation).
- Pipe material/grade.
- Pipe nominal outer diameter and wall thickness.
- Plant-applied coating system, including thickness.
- Type and frequency of certificate of compliance in accordance with ISO 10474 (see 5.6)
- Permissible field joint coating repairs.

All parties consent to this document being signed electronically - UP&C/JOR/INT/2021/3690

- Acceptable level of soluble salts (see section 7).
- Any special requirement with regard to FJC overall thickness and/or thickness of individual layers.
- Overlap on the plant-applied coating.
- Requirements for traceability and marking.
- Requirements for documentation and schedule of supply of documentation.
- Qualification of the APPLICATOR's personnel who apply and/or inspect the coating.
- COMPANY's approval of the Application Procedure Specification (APS).
- Procedure Qualification Testing (PQT).
- Temperature range during installation.
- Method of installation of the pipeline.
- Specific testing conditions and minimum requirements when applicable.

2.1.2 Information to be Submitted by the APPLICATOR

The APPLICATOR shall submit the material technical and safety data sheets to the CONTRACTOR/COMPANY of the field joint coating system to be used.

The submitted documents shall include the following as a minimum:

2.1.2.1 Coating System Identification

The following data shall be submitted on coating system identification;

a. System designation.
b. Name of coating Manufacturer(s).
c. Generic type of system.
d. Coating application process.
e. System structure (e.g., 2-layer or 3-layer).
f. Structure components (primer, adhesive, outer layer).
g. Service temperature range.
h. Total nominal coating thickness.
i. Compatibility to line pipe coating and CP systems.
j. Suitability for service conditions (underground, immersion …).
k. Relevant international/national coating standard approvals.
l. Required storage conditions, shelf life.

All parties consent to this document being signed electronically - UP&C/JOR/INT/2021/3690

m. Material hazards and safety precautions.

2.1.2.2 Manufacturer's Data

A. **Liquid Epoxy**

The following data shall be submitted on the liquid epoxy components:

a. Trade name.
b. Type of base (epoxy resin) and extender modification and type of curing agent (for liquid epoxy).
c. Color.
d. Solids by weight and volume.
e. Theoretical coverage per m2 for nominal thickness.
f. Storage conditions and shelf life.
g. Application procedures, pot life, over coating time.

B. **Heat Shrink Sleeve**

The shrink sleeve MANUFACTURER/SUPPLIER shall submit technical data of the system and system components for information of the COMPANY.

C. **Primer**

The following data shall be submitted on the primer (if applicable):

a. The generic type of primer.
b. For liquid primers the solids content, the type of solvent and the density.
c. The method of application (brush, roller, spray, etc.).
d. Required storage conditions, shelf life.
e. The nominal dry-film-thickness or spreading rate.
f. Application procedures, temperature, pot life, over coating times, if applicable, for various ambient temperatures (10 °C to 50 °C)
g. Health and safety data sheets.

D. **Adhesive**

The following data shall be submitted on the shrink sleeve adhesive:

a. Generic type of adhesive.
b. Nominal thickness of the adhesive.
c. Softening point of the adhesive.

All parties consent to this document being signed electronically - UP&C/JOR/INT/2021/3690

E. **Shrink Sleeve Material**

The following data shall be submitted on the outer sheath material:

a. Generic type of sheath material.
b. Nominal thickness of the sheath.
c. Mechanical properties of the sheath film (tensile strength, elongation).
d. Storage conditions, shelf life.
e. Shape of delivered product (tubular, wrap or tape).
f. For wrappings, the type of closure.
g. Colour.

F. **Fusion Bonded Epoxy**

The following basic properties of the epoxy powder resin are requested:

a. Infrared scan.

An infrared spectrogram shall be submitted for comparison with all subsequent batches produced.

b. Particle size analysis

The particle size distribution analysis shall be carried out in accordance with ISO 8130-1. The coating CONTRACTOR shall confirm that the particle size is suitable for the electrostatic spraying equipment used by the proposed APPLICATOR.

c. Density

The density of the powder shall be measured in accordance with ISO 8130-2 or ISO 8130-3.

d. Curing schedule and gel time

A curing schedule shall show the gel time and minimum curing time required for full curing of the coating at various recommended application temperatures. The gel time shall be determined in accordance with ISO 8130-6.

e. Moisture content

The moisture content of the powder shall be determined by means of ISO 8130-7 and shall not exceed 0.5 % by mass.

f. Storage stability

The storage stability of the epoxy powder shall be determined in accordance with ISO 8130-8.

All parties consent to this document being signed electronically - UP&C/JOR/INT/2021/3690

g. Thermal analysis

A thermal analysis shall be made by means of differential scanning calorimetry to determine the glass transition temperatures and the enthalpy of curing of the powder.

2.1.2.3 Coating System Qualification information

Before a field joint coating system can be approved / specified for a specific application, it shall be qualified. Qualification shall be carried out according to the following procedures, which are also applicable for general qualification requirements.

a. The CONTRACTOR/APPLICATOR shall submit all data specified in (2.1).
b. The CONTRACTOR or the coating MANUFACTURER shall show that samples of the coating system applied on pipe joints of the specified pipe material have been successfully subjected to the tests as specified in Table B, C & D whichever applicable. The tests shall be carried out by an independent test laboratory, which have ISO/IEC 17025 accreditation if approved by the COMPANY and by the coating MANUFACURER. The COMPANY shall witness the application and the tests. The number of pipe joints to be tested is given in Table B.
c. If agreed by the COMPANY, previous qualification data developed in accordance with the requirements of this specification may be used provided that the tests were performed using the same field joint coating system and the same coating application process as specified.

A continuously updated list of the qualified coatings with full commercial names will be held with the COMPANY. However, for the specification, since continuous flow of new coating products and improvements to existing coatings are carried out by the manufacturers, the inclusion of all the latest qualified coatings at all times may not be possible.

2.2 Documentation

2.2.1 Qualification Records

The CONTRACTOR shall submit all relevant information and records concerning the field joint coating qualification process. This information shall consist of:

a. Copies of pre-qualification information as requested.
b. Records of all samples as specified.
c. Records of all qualification tests carried out including test equipment data, test conditions and identification of samples used.
d. Records of all test results.

All parties consent to this document being signed electronically - UP&C/JOR/INT/2021/3690

e. Names of persons who carried out and/or witnessed the tests.

All information shall be compiled into a test report that shall be approved and signed by the responsible person of the test laboratory and by the Inspector.

2.2.2 Field Records

During field application of the coating system, the CONTRACTOR shall keep accurate records of all information related to the coating application. This information shall include at least the following, all of which should be included in the APPLICATOR's ITP:

a. All coating application procedures.
b. The field joint coating qualification report.
c. Results of qualification tests for field joint coating Application workers including names and dates of qualification.
d. Identification of the pipe joints where coatings have been applied, by reference to the joint numbers in the pipeline construction record book.
e. Batch numbers of all coating components that have been applied, date/time of application and the name of the Application workers.
f. Results of all quality control testing.
g. Identification of field joint coatings that have been subjected to peel strength tests and destructive testing, with date/time of the test and all test results.
h. Records of any process changes needed to comply with the specifications.
i. Names and signatures of the responsible persons for the application process and quality control.

All results shall be compiled into a report in a format agreed between the CONTRACTOR and the COMPANY. Reports shall be made available on a daily basis for work performed the previous day.

2.3 Pre- Job Meeting

The APPLICATOR shall schedule a pre-job meeting to ensure that job requirements are fully understood. The personnel present at the meeting shall include, but not be limited to, the COMPANY's representative, CONTRACTOR's and the APPLICATOR's representatives for coating supervision, quality control and safety. If required a technical representative of the Manufacturer shall be present. Roles and responsibilities shall be clarified at the pre-job meeting and MOM shall be issued. It shall be confirmed that all parties have the latest version of the technical specifications, coating procedure, AFC drawings and ITP.

All parties consent to this document being signed electronically - UP&C/JOR/INT/2021/3690

2.4 Quality Control Personal

CONTRACTOR and APPLICATOR shall provide a CVs for COMPANY approval of highly experienced & certified inspectors to conduct the coating inspection and job certification. Inspector shall have minimum 5 years' experience in pipeline coating projects and NACE CIP level II certificate or approved equivalent. COMPANY shall conduct an interview for all quality personnel candidate's prior the approval. The assigned coating inspector shall witness all steps of the coating process in accordance with the approved ITP starting from the PQT till final release of the coated pipes.

3. Application Procedures and Qualification

3.1 Application Procedure Specification (APS)

Prior to the start of production and PQT, the APPLICATOR shall prepare an APS, including:

- Identification of the coating.
- Manufacturer's instructions for application.
- Preparation of steel surface and plant-applied coating, including inspection (see section 7).
- Data sheets defining coating and abrasive blasting material properties.
- Maximum design temperature, Tmax, of field joint coating.
- Receipt, handling and storage of coating and abrasive blasting materials (see 5.2 and 7.2).
- Coating application procedure, tools and equipment.
- Overlap (with tolerances) of FJC over plant coating
- Inspection and testing (during production) of an applied FJC.
- Repair and testing of defective FJC.
- Stripping of defective FJC.
- Marking, traceability and documentation.

The APS shall cover all items associated with quality control as defined in this part of specifications and any agreed options for the specific FJC.

All coating work, testing and inspection shall be carried out according to the APS and ITP. The APS shall be approved prior to the start of production and prior to any agreed PQT. Once approved, the APS shall not be changed by the APPLICATOR without prior written authorization from the COMPANY.

All parties consent to this document being signed electronically - UPDT/JOR/INT/2021/3690

3.2 Coating Systems

The APPLICATOR shall provide the data sheets for each coating material.

In addition to the coating-material data sheets, the APPLICATOR shall provide the following information from the manufacturer:

- Batch certificates certifying that the coating materials delivered meet the coating characteristics as set forth in the coating data sheets, and any agreed optional requirements, if applied according to the manufacturer's instructions.
- Packaging, transport and storage requirements of coating materials.
- Range of application conditions including minimum and maximum application temperatures (for materials and substrate) and relative humidity.
- Material safety data sheet (MSDS).

Marking on each shipment of coating materials shall contain the following information:

- Manufacturer's name.
- Name and complete identification of material, including plant of origin.
- Reference to applicable coating-material standards.
- Production batch number.
- Mass/size.
- Date of production.
- Expiry date.

3.3 Procedure Qualification Test (PQT)

Before a field joint coating system can be specified for a specific application it shall be qualified. Qualification shall be carried out according to the following procedures, which are also applicable for general qualification requirements:

a. The CONTRACTOR or the coating MANUFACTURER shall submit all data specified in (2.1.2.2) and (2.1.2.3).

b. The CONTRACTOR or the coating MANUFACTURER shall show that samples of the coating system applied on pipe joints of the specified pipe material have been successfully subjected to the tests as specified in this specification. The COMPANY shall witness the application and the tests.

All parties consent to this document being signed electronically - UPTC/JOR/INT/2021/3690

c. The number of pipe joints to be tested and the test procedures are given in Table B. Any further tests requested by the COMPANY shall be performed.

d. With the approval of the COMPANY, qualification tests carried out in accordance with other coating standards may be used in, so far as the procedures are equal or more stringent than the procedures in this specification. Qualification test information shall include full reports on test procedures and results and shall be signed by the laboratory representatives and certification body. Acceptance criteria shall remain the same as included in this specification.

e. The CONTRACTOR shall prepare a detailed procedure for all types of required field joint coatings for approval by the COMPANY. All inspections and measurements made during field joint application and any procedure qualifications, as required, shall be documented and provided to the COMPANY.

f. The application shall be carried out using the CONTRACTORS field joint coating procedure of the project. The CONTRACTOR shall prepare a coating procedure for approval to ensure compliance with the requirements in this specification.

g. There shall be a PQT of all field joint coating:
    - The PQT shall include details of equipment, materials, operator requirements, surface preparation, application techniques, repairs, and testing. The PQT should also include handling of hazardous waste materials and disposal methods.
    - The PQT shall use the same equipment and materials that will be used at the fabrication yard or at site. Test pipe shall have a mill applied coating, identical to that which will be used during actual field joint execution.

h. If long field joints are used for off shore installation, multiple barriers to water ingress shall be used. The corrosion coating shall be holiday free, the application method shall ensure bonding between all components, and the mold for injection molding shall be permanent and thermo-plastically welded to the parent coating (for PE/PP).

All parties consent to this document being signed electronically - UP&C/JOR/INT/2021/3690

3.3.1 APPLICATOR Qualification

A. General

Before application of a field joint coating system may commence, the APPLICATOR shall be qualified to apply the coating system. The qualification shall be carried out according to the following procedures:

B. Field joint coating application procedure

The CONTRACTOR shall submit to the COMPANY information on the required coating application process and recommended APPLICATORS. Prior to start of production and any qualification testing, the CONTRACTOR shall prepare a detailed application procedure specification including the following and submit to COMPANY for review and approval:

a. Project specific application procedure
b. Quality plan including coating manufacturer datasheets
c. Inspection and Test Plan (ITP)
d. Description of the coating application process, tools and equipment
e. Pipe cleaning and surface preparation (cleanliness, profile, chemical pre-treatment etc.)
f. Required surface and material application temperatures
g. Recommended APPLICATORS
h. Repair and testing procedures
i. Marking, traceability and documentation

C. Qualification

After approval of the coating application procedure, ITP and before field application starts, the APPLICATOR shall submit evidence of previous successful application of the field joint coating system on pipes of the specified material, and that the product complied with the requirements of this specifications for the tests specified in Table B, C & D whichever applicable.

The APPLICATOR shall make a number of joints in order to:

- Prove the quality plan
- Prove the application procedures (both main and repair)
- Prove the ITP

This should cover at least 5 field joints. If different procedures are required for different sizes of joints, this should be 5 test joints for each procedure. All joints offered shall be tested in accordance with Table B, C & D whichever applicable. After the APPLICATOR has

All parties consent to this document being signed electronically - UP&C/JOR/INT/2021/3690

satisfactorily demonstrated application of the field joint coating, two joints shall be coated and the joints shall be tested in accordance with Table B, C & D whichever applicable.

At least two welded pipe pups with the factory line pipe coating shall be coated by the APPLICATOR with the proposed field joint coating system and shall be subjected to the tests specified in Table B, C & D whichever applicable. These tests may be carried out in the APPLICATOR's own laboratory, or by an independent laboratory to be agreed by the COMPANY. The COMPANY shall witness the application and testing. The results of the tests shall be reported to the COMPANY, signed by the head of the laboratory and the witness.

3.4 Pre-Production Test (PPT)

The PPT shall be carried out in presence of the COMPANY and/or CONTRACTOR representative at the start of production when equipment and personnel are mobilized on site. The PPT shall be performed on the first joints to be coated to verify the Coating system.

- Coating materials.
- Application procedure.
- Equipment being used for surface preparation and coating application.
- Application of the coating system.
- Qualification of the coating APPLICATOR and CONTRACTOR's site inspectors.

3.5 Production Testing and Inspection

The applicator shall perform inspection and testing during production in accordance with an ITP to verify the surface preparation, coating application and the specified properties of the applied FJC.

The ITP shall be prepared by the APPLICATOR and shall be approved by the COMPANY prior to the start of the coating work and prior to the start of any PQT. The ITP shall identify all inspection activities and tests, their frequency, acceptance criteria and the relevant inspection authorities.

3.6 Certificate of Compliance and Traceability

The inspection documents shall be in accordance with ISO 10474 inspection certificate type 3.2. FJC reports shall identify each field joint by a unique number for identification purposes and shall record the material batch number for traceability. Test results shall be linked to the field joint number or repair on which they were performed. Records shall be maintained on a shift and daily basis and shall be available for inspection by the COMPANY.

All parties consent to this document being signed electronically - UP&C/JOR/INT/2021/3690

3.7 Marking

Field Joints shall be marked with the following information:

a. APPLICATOR's name and mark
b. Specification/Standard designation and year.
c. Date of coating application
d. Thickness of the coating applied
e. COMPANY Name
f. Project Name.

The paint / ink used for the marking shall be insoluble in water.

4. Classification of Field Joint Coatings

The field joint coating system shall be suitable to provide corrosion protection to the field joints of a pipeline to the same standard or better than the pipe coating system used on the main body of the pipeline.

The field joint coating system as specified shall be manufactured to obtain the required coating properties under the prevailing design, installation and operating conditions.

4.1 Coating Types

4.1.1 Liquid EPOXY

Liquid epoxy and epoxy-modified coatings shall be solvent free. These are two-pack coating systems composed of a base (epoxy resin) and a curing agent. The coating system can be modified with other components. Reinforcement of the coating systems can be achieved by using glass fibers of glass flakes.

4.1.2 Liquid Polyurethane

Liquid polyurethane and polyurethane-modified coatings shall be solvent free. The coating system can be modified with other components.

4.1.3 Heat Shrink Sleeve

A heat shrink sleeve is a type of field joint coating, applied to a pre-heated pipeline in the form of a sleeve or wrap, which shrinks in the circumferential direction under the influence of heat or by other means, forming an adherent field joint coating.

The shrink sleeve consists of a polyolefin (PE or PP) based backing with an adhesive layer (mastic or hot melt) on one side.

All parties consent to this document being signed electronically - UP&C/JOR/INT/2021/3690

4.1.4 Polyethylene / Polypropylene tape / Sheet

Polyethylene / Polypropylene tape / sheet shall be applied over an epoxy primer coating. The required thickness shall be achieved by wrapping the joint with polyethylene tape/sheet; either in a spiral or a single piece large enough to cover the required area.

4.1.5 Polyethylene /Polypropylene heat shrink sleeve

Polyethylene /Polypropylene heat shrink sleeve is described in (6.1.3). For this coating, type a Polyethylene /Polypropylene copolymer adhesive layer and epoxy primer layer shall be used.

4.1.6 Fusion Bonded EPOXY

Fusion bonded epoxy shall consist of a fusion bonded epoxy layer applied by spraying epoxy powder on an electrostatically heated pipe surface.

4.2 Temperature

The suitability of a field joint coating for a particular temperature shall be demonstrated by performing the qualification tests at the relevant test temperature specified in this Specification.

4.3 Pipe Coating Compatibility

The field joint coating shall possess the required adhesive properties when applied on the base pipe and the various line pipe coating materials. The pre heat and application temperatures required for the application of the field joint coating shall not cause loss of functional properties of the line pipe coating.

The suitability of the field joint coating for use with a particular line pipe coating system shall be demonstrated by carrying out a full application procedure followed by adhesion testing using the generic types of pipe coating as a substrate where required by this specification.

Additionally, any deterioration or loss of functional properties of the line pipe coating due to the application of the field joint coating using recommended procedures shall render the field joint coating unsuitable for use in conjunction with that type of line pipe coating.

4.4 Pipeline Diameter

The field joint coating shall be suitable for application in the field on the pipeline diameters used in a specific project, in accordance with the Manufacturer's application instructions. Variation in pipeline diameter is not part of the common qualification procedure, except when different diameters require different application procedures (e.g., flame heating rather than induction heating, or one-person rather than two-person application).

All parties consent to this document being signed electronically - UP&C/JOR/INT/2021/3690

The CONTRACTOR shall demonstrate that a field joint coating, applied on the pipeline of specified diameter in the field, complies with this Specification.

Procedures for the testing of applied field joint coating in the field are specified in (7). Qualification of the APPLICATOR is specified in (3.3.1).

5. General Requirement for Surface Preparation, Coating Application, Test and Repairs

The coating Manufacturer shall submit full application procedures, which shall consist of the proposed materials with full technical data and shall include the material properties, application data (instructions, recommendations, guidelines etc.) with the following as a minimum:

a. Surface preparation of the steel surface (method, cleanliness, profile).
b. Preparation of the line pipe coating at the overlap (method, roughness, chamfer)
c. Application of primer (method, thickness).
d. Pre-heating requirements (method, temperature, testing)
e. Method of application
f. Quality control procedures

The application procedures shall be qualified by the CONTRACTOR or APPLICATOR, for both the product and the individual application personnel, under the supervision of the coating Manufacturer. If required, multiple application procedure qualifications shall be undertaken to cover the full range of pipeline diameters, wall thicknesses and corrosion coating types, as applicable.

The APPLICATOR shall be responsible for all aspects of safety and personal protection related to the field coating application to be done. Environmental regulations and rules shall be met. All personnel shall be provided with approved safety equipment e.g., protective clothing, safety glasses, safety shoes, hard hats, goggles, earplugs and any other necessary safety equipment. All safety equipment shall be maintained in a good working condition.

Adequate warning signs shall be prominently displaced on each access way to all areas where abrasive blasting and field joint coating application is in progress. Handling and disposal of hazardous waste resulting from the CONTRACTOR's field joint coating activities shall be in accordance with applicable regulations and any additional requirements specified by the COMPANY.

5.1 Field Joint Coating Installation

The maximum time between surface preparation and start of the field joint coating application shall be no longer than 4 h or any blooming occurs, whichever is sooner. Pipe joints whose

All parties consent to this document being signed electronically - UP&C/JOR/INT/2021/3690

coating is delayed beyond this period, or pipes showing any visible rust stains or discoloration, regardless of the time period since blasting, shall be blast cleaned again.

The application of the coating shall be strictly in accordance with the coating Manufacturer's application procedures and applied by qualified personnel.

For all field coating applications, the surface temperature of the joint shall comply with the requirements specified in the application procedures.

a. Heating equipment shall be controlled to maintain uniform temperatures throughout the coating process.
b. The temperature of the joint shall be monitored using suitable means in order to fulfil the application requirements.
c. Induction heating shall be used for all FBE applications for pipelines in wet environment (offshore / Sabkha) and specifically for pipeline nominal diameters above 600 mm (24 in).
d. The method of heating used during qualification shall also be used on site during application.

For multi-layer systems, the temperature and time between subsequent layers shall be controlled to obtain sufficient interlayer adhesion. The required layer thickness of the primer (if required) and the total coating layer shall be specified in the application procedures. Batches of coating components shall be used in the same sequential order in which they were manufactured.

5.2 Quality Control during Field Application

5.2.1 General

All personnel and techniques and equipment shall be qualified. Certification and records of qualification shall be maintained on site and shall be traceable to individual APPLICATORS and equipment.

During field application of the coating, the APPLICATOR shall carry out all quality control activities needed to ensure that the coating is being applied in accordance with the approved coating application procedures and that the final product complies with the requirements of this Specification.

All parties consent to this document being signed electronically - UP&C/JOR/INT/2021/3690

The inspection and testing procedures shall be carried out as agreed between the COMPANY and the CONTRACTOR in the Quality Plan (or Inspection and Test Plan). The minimum quality control tests to be performed shall be as specified in Table A.

The COMPANY retains the right to witness all coating system application work. No coating work shall be performed without inspection staff designated by the COMPANY. The results and documentation of the quality assurance program shall be available to the COMPANY at all times.

5.2.2 Ambient Conditions

The APPLICATOR shall measure the ambient conditions at regular intervals during blasting and coating using certified and calibrated instrumentation and keep records of air & surface temperature, humidity and dew point.

During the entire surface preparation and coating process, the pipe joint surface temperature shall be more than 3 °C (5.4 °F) above the ambient dew point.

- The ambient relative humidity (RH) shall be monitored and recorded. Below 85 % RH, up to four hours may be allowed after blasting and prior to coating. Pipe that exceeds these limits shall be re-blasted.
- The temperature of the pipe surface shall be checked by means of suitable instruments, e.g., infrared sensors, contact thermometers or thermocouples and shall be in accordance with the application guidelines.

If the environmental conditions lead to parameters that are outside the limits specified in the qualified procedures or this Specification, the application shall be suspended until the requirements are met.

5.2.3 Inspection of Uncoated Joints before Blasting

Before surface preparation starts, each joint shall be visually examined for dents, laps, weld spatter or any other defects to avoid coating unusable joints. No repairs to a damaged pipe joint may be made without a written procedure approved by the COMPANY.

All visible surface imperfections of substrate caused by the girth welding operation, such as welding, slag and spatter, sharp edges or burrs that could damage the coating, detected before or during surface, preparation shall be removed by grinding or filing technique in accordance with P3 of standard ISO 8501-3

The factory coating shall be checked for visible defects. Pipes with non-adherent and/or degraded pipe coating outside the repair acceptance limits shall be rejected.

All parties consent to this document being signed electronically - UPTC/JOR/INT/2021/3690

All surfaces to be coated shall be dry and free of all surface contamination. Oil, grease, and other contaminants shall be removed, before blast cleaning by a suitable solvent. Excessive dirt may require removal by a high pressure, fresh water rinse.

5.2.4 Preparation of Factory Applied Coating Transition Area

The factory applied coating adjacent to the joint area shall be prepared to provide a suitable surface to which the field joint coating will adhere. The preparation methods shall be submitted by the APPLICATOR and agreed to by the COMPANY as part of the Inspection and Test Plan. Any damage sustained to the factory applied coating adjacent to the joint area shall be repaired before acceptance of the field joint coating.

There shall be a 5-15 mm of intact FBE exposed beyond the Factory applied termination point on each side of the pipe.

High pressure water washing shall be carried out to remove all contaminants or abrasive blasting materials.

5.2.5 Blast Cleaning

Compressed air used for blast cleaning shall be free from oil, condensed moisture and any other contaminants and shall conform to the requirements of ASTM D4285.

Blasting equipment that includes devices to recycle abrasives shall have equipment that ensures removal of dust, fines, corrosion material and any other contaminants. Expandable abrasives shall not be recycled. Slags of all types shall not be used as a blast cleaning abrasive.

For stainless steel pipes, stainless steel abrasives or non-ferrous abrasives shall be used for blast cleaning. Any blasting material with conductivity greater than 50 µS/cm (127 µmho/in) shall not be used.

Immediately after blast cleaning, all remaining weld spatter and irregularities shall be removed from the pipe surface by chiseling and/or grinding. Any treated surface with an area larger than 25 cm^2 shall be re-blasted to the cleanliness and roughness as specified above.

Exposed fusion bonded epoxy on both sides of the joint shall be abraded to a rough finish. Since high pressure blasting may cause micro cracks in the exposed FBE layer, it is recommended to test and adjust blasting pressure for the preparation of FBE surface during procedure prequalification tests.

Any grit blast media or debris remaining on the surface of the pipe after grit blast shall be removed using high pressure air blowing

All parties consent to this document being signed electronically - UP&C/JOR/INT/2021/3690

5.2.6 Inspection after Blasting

The pipe surface shall be cleaned of mill scale, rust and other foreign matter to achieve a minimum surface cleanliness of Sa 2½. Joints that do not comply shall be rejected and cleaned again.

The dust level on the blast-cleaned surface at the time of coating shall not exceed quantity rating 2 (density and size) in accordance with ISO 8502-3. An increased conductivity level may indicate that an ionic contaminant has been introduced into the blasting material from the pipe surface. If contamination of the surface occurs, the quality of the blast cleaning material and process shall be examined according to ISO 11127-6.

The surface profile shall be in accordance with the field joint coating Manufacturer's specification, and shall be documented in the written Inspection and Test Plan. Method for measurement of surface profile shall be in accordance with ISO 8503-2 or measured directly using a digital profile gauge approved by the COMPANY. Surface profiles outside of specified limits shall be re-blasted.

5.2.7 Salt Contamination Assessment

The maximum residual soluble salts level on the blast-cleaned surface shall be 2 µg/cm^2, in accordance with ISO 8502-6 & ISO 8502-9 using Bresle kit.

Soluble salts level exceeding this value, where all exposed joints shall be washed in accordance with NACE WJ-3 (Waterjet Cleaning) with a minimum pressure of 3000 psi. Operation shall be carried out until the salt level falls within the limit.

5.2.8 Coating Application Temperature

The temperature of the pipe surface during application shall be checked by means of suitable instruments, e.g., infrared sensors, contact thermometers or thermocouples and shall be in accordance with the application guidelines. Tempil sticks shall not be used.

The monitoring instruments shall be independent of the temperature control equipment. The instruments accuracy shall be checked as per the instrument manual or the instrument manufacturer recommendations. Joints that do not comply with the quality control requirements shall be rejected, cleaned and recoated.

5.2.9 Appearance, Thickness and Holidays

Upon reaching stable conditions following coating application, each coated joint shall be visually checked for imperfections and irregularities of the coating and for the absence of

All parties consent to this document being signed electronically - UP&C/JOR/INT/2021/3690

holidays (Annex B.2). Joints that do not comply with the requirements shall be rejected, cleaned and recoated.

No holidays are allowed in the final coating. If holidays are detected, the coating shall be repaired with an appropriate repair coating system. The number of allowable repairs shall be one per field joint and shall be specified in the ITP.

The total thickness of the applied coating system shall be measured in accordance with (Annex B.1) at regular intervals.

- For semi-automatic application, coating thickness inspection frequency shall be one out of every 10 joints, with a minimum of twice per shift,
- For hand application, the coating thickness inspection frequency shall be every joint.
- The minimum thickness shall be not less than 90% of the specified / target DFT
- When the measured layer thickness is out of the required range, additional measurements should be taken and corrective actions should provide that the coating shall be applied within the agreed layer thickness range.

5.2.10 Destructive Adhesion Testing

One out of every 100 applied field joint coatings for each pipeline shall be selected for destructive adhesion testing of the coating. Testing of the adhesion of the field joint coating system to the steel surface, weld and to the overlap at the existing line pipe coating shall be performed. The tests shall commence as soon as possible after coating to allow readjustment of the coating process if required.

Additional destructive adhesion testing shall be performed in case that poor adhesion is indicated. Frequency of the test may be extended subject to indicating good adhesion.

5.2.11 Acceptance of Failed Joints

In the event of joints failing to meet the requirements as specified in this section, preceding joints coated after the last acceptable joints and the joints coated following the failed joint shall be considered suspect and shall be marked for further testing.

The APPLICATOR shall propose and agree with the COMPANY to a failure investigation programmer to trace any of the failed / suspect joints affected by the same failure. Further testing shall involve inspection and examination similar to or more than that carried out on the original rejected joints. Based on the test results, the final acceptance or rejection of the suspect joints shall be made by the COMPANY.

All parties consent to this document being signed electronically - UP&C/JOR/INT/2021/3690

In addition, the APPLICATOR may be required to stop application and carry out a full investigation into the source of the problem. The results of the investigation shall be submitted to the COMPANY before receiving COMPANY's permission to recommence application.

Table A. Minimum quality control requirements for field joint coatings with Exceptional to HSS

Property	Section	Test method	Test frequency
Ambient conditions	5.2.2		every four hours or anytime there is a change in weather condition
Surface condition before Blasting	5.2.3	Visual	each pipe
Cleanliness of blast cleaned surface	5.2.6	ISO 8502-3	each pipe
Surface profile	5.2.6	ISO 8503-2	one out of every 10 joints (minimum 2 per shift)
Surface cleanliness Soluble salts Dust	5.2.7	ISO 8502-6 & ISO 8502-9	one out of every 100 joints (minimum 1 per 24 h)
Oil and water in compressed air	5.2.6	ASTM D4285	Once at the start of test and after compressor is restarted
Blast cleaning materials and process	5.2.6	ISO 11127-6	once per shift or related to (4.3.3) ISO 11127-6
Pipe surface temperature during coating application	5.2.8		each pipe
Appearance	5.2.9	Visual	each pipe
Coating thickness	5.2.9	Annex B.1	each pipe for hand flocking and 1 out of 100 and at least twice per shift for semi-automatic

All parties consent to this document being signed electronically - UP&C/JOR/INT/2021/3690

Property	Section	Test method	Test frequency
			application
Holiday detection	5.2.9	Annex B.2	each pipe
Adhesion	5.2.10	Annex B.3	For onshore application - one out of every 100 joints (minimum 1 per 24 h)

Table B. Number of joints required during qualification

Property	Test method (section)	Coating system Qualification	APPLICATOR qualification/ PPT
Cleanliness of blast cleaned surface	5.2.6	5 joints	2 joints
Surface roughness	5.2.6	5 joints	2 joints
Pipe surface Temperature	-	5 joints	2 joints
Coating application Temperature	-	5 joints	2 joints
Appearance	Visual	5 joints	2 joints
Coating thickness	Annex B.1	5 joints	2 joints
Holiday detection	Annex B.2	5 joints	2 joints
Adhesion	Annex B.3	5 joints	2 joints
Impact	Annex B.7	5 joints	2 joints
Indentation	Annex B.8	3 joints	
Flexibility	Annex B.13	3 joints	

All parties consent to this document being signed electronically - UP&C/JOR/INT/2021/3690

Property	Test method (section)	Coating system Qualification	APPLICATOR qualification/ PPT
Hot water soak	Annex B.9	3 joints	
Cathodic disbonding	Annex B.6	3 joints	
Thermal ageing	Annex B.12	3 joints	
Lap shear	Annex B.10	5 joints	
Degree of cure of FBE	Annex B.5	3 joints	
Microscopic examination	NACE RP0394-	3 joints	
Peel to outer layers	Annex B.11	3 joints	
Destructive testing	-	3 joints	2 joints
System identification/ Manufacturer's data	-	Available to the COMPANY	
Coating application Process	-	-	Approved by the COMPANY

6. Heat Shrink Coatings

The shrink sleeve MANUFACURER/SUPPLIER shall submit technical data on the coating system and system components for information of the COMPANY as requested in (4.2.2). HSS coatings are applicable to Offshore Field Joints.

The Heat Shrink sleeve offered shall meet the requirements detailed in Table C & D based on ISO 21809-3. Heat Shrink Sleeves shall be from qualified / approved list.

6.1 Application of the Coating

6.1.1 General

Application of the coating shall be carried out in accordance with the COMPANY approved APS.

All parties consent to this document being signed electronically - UP&C/JOR/INT/2021/3690

6.1.2 Application of the Primer

Application of the primer, shall be carried out in accordance with the COMPANY approved APS.

6.1.3 Application of Heat Shrinkable Material

Application of the material shall be carried out in accordance with the APS. As a general guideline, the following procedure shall be followed:

- After welding, clean the area with the approved cleaning method.
- Preheat the area to be a temperature as per manufacturer recommendations. Preheating shall be by induction heat coils only. Surface warming is for the application of liquid epoxy to the surface.
- Two-component liquid epoxy shall be mixed thoroughly with no color streaks and shall be applied to the surface at a wet film thickness of 250 to 300 microns. Application can be carried out using sponge pad or any other appropriate tool.
- Once the surface is applied with liquid epoxy, it shall be heated with induction coil to a temperature, as recommended by MANUFACURER of HSS, for the application of heat shrink sleeve.
- CONTRACTOR's equipment as well as procedure shall be pre-qualified during PQT.
- Position the sleeve so as to provide the correct overlap on the plant coating when shrinking is completed.
- Heat the Heat Shrink Sleeve to the specified surface temperature with a gas torch or other heat source [e.g. infra-red (IR) heater].

If heating is carried out using a gas torch, the heat shall be applied progressively and regularly, starting from the middle of the sleeve and going towards the ends to avoid forming air pockets.

Care shall be taken to ensure a uniform heat pattern as specified in the APS and demonstrated by the APPLICATOR in the PQT. In addition, the temperature shall be checked by a temperature-measuring device (e.g. hand-held thermocouple), at a minimum of one location on each side of the pipe, immediately prior to application of the sleeve. The heating time and the temperature shall not

a. Result in visible damage of the surface of the primer and of the coating, detrimental to the quality of the coating of the joint; or
b. Damage the plant-applied coating.

All parties consent to this document being signed electronically - UP&C/JOR/INT/2021/3690

6.1.4 Overlap

The overlap of shrinkable materials on the plant-applied coating shall be at least 50 mm after shrinking.

6.2 Procedure Pre-Qualification Testing of the Approved Systems

Prior to the field applications MANUFACTURER/CONTRACTOR involved in the application of the field joint coating system shall perform the Procedure Qualification Tests (PQT) as given in the table C for PE HSS & Table D for PP HSS respectively. Similarly, equipment, personnel & some procedure related approvals as per section 6 shall also be confirmed during the PQT.

Following points shall be considered for the preparation of the PQT samples.

6.2.1 For each batch of material at least one joint shall be prepared while minimum number of test joints shall be three.

6.2.2 All joints shall be prepared at different times.

6.2.3 If more than one APPLICATOR are to be qualified for a job, each APPLICATOR shall prepare at least 2 joints. APPLICATOR approved for one job can be considered approved for the next job provided that the MANUFACTURER/CONTRACTOR provides sufficient proof on the continuity of his applications.

6.2.4 In case if a joint fails to achieve the minimum required values, manufacturer and client shall analyze and agree on the possible cause of failure and retesting shall be carried out accordingly.

Following points shall be considered for the preparation of the PQT samples:

6.2.5 One joint shall be prepared while minimum number of test joints shall be three.

6.2.6 All joints shall be prepared at different times.

6.2.7 If more than one APPLICATOR are to be qualified for a job, each APPLICATOR shall prepare at least 2 joints. APPLICATOR approved for one job can be considered approved for the next job provided that the MANUFACTURER/CONTRACTOR provides sufficient proof on the continuity of his applications.

6.2.8 In case if a joint fails to achieve the minimum required values, MANUFACTURER and client shall analyze and agree on the possible cause of failure and retesting shall be carried out accordingly.

6.2.9 For each batch of material or at agreed frequency, PQT to be conducted to qualify new batch material in accordance to section 6.

6.3 Testing of the Applied Coating

The acceptance criteria shall be in accordance with Tables C & D.

All parties consent to this document being signed electronically - UP&C/JOR/INT/2021/3690

Table C

Performance Parameters & Procedure Qualification Tests and Required Values for PE Heat Shrink Sleeves

Sr. No.	Property	Test Standard	Frequency	Minimum Required Values
1	Visual inspection for surface irregularities	ISO 21809-3	One every joint	No defect
2	Pull off adhesion strength of epoxy to steel at 23ºC	ASTM D4541	1 Test per PQT	≥15 MPa
3	Thickness	ISO 21809-3	5 each joint	3 mm minimum
4	Holiday Detection	ISO 21809-3	100%	No defect at 5kV/mm+5Kv
5	Peel Strength at 10 mm/min to pipe surface and to 3 LPE Coating	ISO 21809-3	One each joint	≥ 5 N/mm at 230C ≥ 0.3 N /mm at 800C
6	Peel Strength to pipe surface and to 3 LPE coating after 100 days hot water immersion at 80oC	ISO 21809-3	Type approval from accredit 3rd Party Agency	P100/P0 ≥ 0.75 at 230C
7	Impact resistance	ISO 21809-3	Each Joint of PQT	No defect at 5kV/mm+5kV
8	Indentation resistance at 80 oC	ISO 21809-3	One test per PQT	Residual thickness ≥ 0.6 mm
9	Cathodic Disbondment at 28 days	ISO 21809-3	One test per PQT	≤5mm at 23ºC ≤10mm 80 ºC
10	Elongation at break	ISO 21809-3	One test per joint	Greater than 250%
11	Lap Shear Strength at 10mm/min	ISO 21809-3	One test per PQT	≥3N/mm2 at 230C ≥0.2N/mm2 at 800C
12	Thermal Ageing, 100 days at 1000C	ISO 21809-3	Type approval from accredit	≥ 0.75 ≥ 0.75

All parties consent to this document being signed electronically - UP&C/JOR/INT/2021/3690

Sr. No.	Property	Test Standard	Frequency	Minimum Required Values
	- Elongation to break E100/E70 @ 230C - Peel strength to pipe surface P100/P70 @ 230C		3rd Party Agency	
13	Tensile strength	ASTM D 638	One test per PQT	Greater than 20 MPa
14	Water absorption	ASTM D570	One test per PQT	Less than 0.05% wgt
15	Overlapping on the 3 LPE	Visual	Each Joint	50 mm minimum
16	Hot water soak test for epoxy at 80o C for 28 days	API RP 5L9	One test on epoxy only	No loss of adhesion
17	Adhesion liquid epoxy to existing factory applied FBE	ASTM D 4541	3 test points	Greater than 750 psi
18	Destructive testing	This Specification	One complete joint	Even distribution of primer and adhesive.

All parties consent to this document being signed electronically - UP&C/JOR/INT/2021/3690

Table D

Performance Parameters & Procedure Qualification Tests and Required Values for PP Heat Shrink Sleeves

Sr. No.	Property	Test Standard	Frequency	Minimum Required Values
1	Visual inspection for surface irregularities	ISO 21809-3	One every joint	No defect
2	Pull off adhesion strength of epoxy to steel at 23ºC	ASTM D4541	1 Test per PQT	≥15 MPa
3	Thickness	ISO 21809-3	5 each joint	3 mm minimum
4	Holiday Detection	ISO 21809-3	100%	No defect at 5kV/mm+5kV
5	Peel Strength at 10 mm/min to pipe surface and to 3 LPP Coating	ISO 21809-3	One each joint	≥ 5 N/mm at 230C ≥ 3 N /mm at 1050C
6	Peel Strength to pipe surface and to 3 LPP coating after 100 days hot water immersion at 95oC	ISO 21809-3	Type approval from accredit TPA	P100/P0 ≥ 0.75 at 230C
7	Impact resistance	ISO 21809-3	Each Joint of PQT	No defect at 5kV/mm+5kV
8	Indentation resistance at 105 ºC	ISO 21809-3	One test per PQT	Residual thickness ≥ 1 mm
9	Cathodic Disbondment at 28 days	ISO 21809-3	One test per PQT	≤5mm at 23ºC ≤10mm 95ºC
10	Elongation at break	ISO 21809-3	One test per joint	Greater than 250%
11	Lap Shear Strength at 10mm/min	ISO 21809-3	One test per PQT	≥5N/mm2 at 230 C ≥1N/mm2 at 1050 C
12	Thermal Ageing, 100 days at 1300C	ISO 21809-3	Type approval from accredit	≥ 0.75 ≥ 0.75

All parties consent to this document being signed electronically - UP&C/JOR/INT/2021/3690

Sr. No.	Property	Test Standard	Frequency	Minimum Required Values
	- Elongation to break E100/E70 - Peel strength to pipe surface P100/P70		3rd Party Agency	
13	Tensile strength	ASTM D 638	One test per PQT	Greater than 20 MPa
14	Water absorption	ASTM D570	One test per PQT	Less than 0.05% wgt
15	Overlapping on the 3 LPP	Visual	Each Joint	50 mm minimum
16	Hot water soak test for epoxy at 95o C for 28 days	API RP 5L9	One test on epoxy only	No loss of adhesion
17	Adhesion liquid epoxy to existing factory applied FBE	ASTM D 4541	3 test points	Greater than 750 psi
18	Destructive testing	This Specification	One complete joint	Even distribution of primer and adhesive.

6.3.1 Visual Appearance

The applied heat shrink sleeve shall be free from blisters formed by entrapped air, wrinkles, pinholes, scratches, burn marks or any other irregularities and shall have a uniform color and gloss. The adhesive shall be regularly distributed under the full area of the sleeve and shall be visible at both ends of the sleeves around the full circumference of the pipe. Overlap of sleeve onto adjacent pipeline coating shall be >50 mm.

6.3.2 Total Thickness

For the shrink sleeves, the minimum thickness is 3 mm & with accordance to ISO 21809-3. The applied shrink sleeve shall be of even thickness over the total sleeve surface allowing for some variation on weld seams.

The minimum value measured on top of the weld shall not be less than 75 % of the nominal sleeve thickness. The thickness shall be measured in accordance with the method described in (Annex B.1).

All parties consent to this document being signed electronically - UP&C/JOR/INT/2021/3690

6.3.3 Holidays

The applied shrink sleeve shall be free from holidays and/or pinholes that are indicated when tested in accordance with (Annex B.2). The test voltage shall be 5kV/mm +5k with a maximum of 25 Kv.

6.3.4 Adhesion

The adhesion of the shrink sleeve to the pipe steel, the weld and the pipe coating shall be determined as peel strength, measured at room temperature and at a test temperature related to the Maximum Design Temperature using the test procedure in (Annex B.3). The minimum peel strength values at the given test temperature shall be as specified in Tables C & D.

After each peel strength test the test surface shall be examined for the mode of failure. There shall be no adhesive failure between the shrink sleeve adhesive component and the (primed) pipe or weld surface.

There shall be no adhesive failure between the shrink sleeve adhesive component and the pipe coating or shrink sleeve backing over more than 10% of the test surface.

6.3.5 Lap Shear Strength

The lap shear strength of the shrink sleeve adhesive to steel shall be determined at room temperature and at a test temperature related to the maximum design temperature in accordance with the test method described in (Annex B.10). The minimum lap shear strength values at the given test temperature shall be as specified in Tables D & E. The mode of failure shall be cohesive within the adhesive layer.

6.3.6 Impact Resistance

The impact resistance of the shrink sleeve system shall be tested at 23 ± 3 °C (73 ± 5.4 °F) in accordance with the test method described in (Annex B.7). The minimum impact resistance shall be 15 J (11 ft-lb) for all pipe diameters with no defect at 5kV/mm + 5kV.

6.3.7 Indentation Resistance

The indentation resistance of the shrink sleeve shall be tested at room temperature and at Maximum Design temperature in accordance with the test method described in (Annex B.8). The minimum remaining thickness after indentation shall be more than 0.6 mm (0.024 in).

All parties consent to this document being signed electronically - UPT&C/JOR/INT/2021/3690

6.3.8 Hot Water Soak

Hot water resistance shall be tested in accordance with (Annex B.9) at a test temperature related to the Maximum Design temperature with a ± 2 ˚C tolerance. The duration of the test shall be 28 days.

After the exposure, the coating shall show no significant evidence (less than 10 % of the test area) of blistering or disbonding.

The adhesion of the shrink sleeve to the pipe steel, the weld and the pipe coating shall be more than 2.5 N/mm (14.3 lbf/in) for PE backed sleeves and more than 4.0 N/mm (22.8 lbf/in) for PP backed sleeves when tested in accordance with (Annex B.9).

6.3.9 Cathodic Disbonding Resistance

Cathodic disbonding shall be tested in accordance with (Annex B.6) at a test temperature related to the Maximum Design temperature as specified in Tables C & D. The duration of the test shall be 28 days. After the test, the maximum radius of disbonding shall be less than the value given in Tables C & D.

6.3.10 Thermal Ageing

Thermal ageing resistance shall be tested in accordance with (Annex B.12) at a test temperature related to the Maximum Design temperature with a ± 2 ˚C (3.6˚F) tolerance. The duration of the test for coating qualification shall be 100 days. After the exposure, the coating shall show no significant evidence (less than 10 % of the test area) of blistering or disbonding. Acceptance values are given in Tables C & D for PE & PP respectively.

6.3.11 Destructive Testing

The regular distribution of the adhesive and the adhesion of the adhesive to the steel surface shall be demonstrated by complete removal of a sleeve by cutting the sleeve into smaller sections and pulling it from the pipe. After removal of the sleeve the pipe surface shall be visually examined.

The sleeve fails the test if:

- more than 5 % of the steel surface shows bare steel or primer, or
- more than 5 % of the circumference on the weld shows bare steel or primer or
- at 20 mm (0.8 in) at either side of the weld shows bare steel or primer, or
- more than 5 % of the pipe coating is bare or
- more than 5 % of the surface area shows voids (signs of air inclusions)

All parties consent to this document being signed electronically - UP&C/JOR/INT/2021/3690

6.3.12 Air Voids

- Window testing shall be carried out on one sleeve out of 100 or once every production shift, whichever is lower.
- Window testing shall be done at a sleeve temperature of maximum 40°C; both sleeve and substrate shall be at this temperature.
- On each sleeve tested, at least one window each shall be cut in the patch overlap area, across the field girth weld and in the body of the sleeve.
- There shall be no evidence either of voids extending to bare metal or areas of no adhesive wetting.
- If any defects are found, their extent shall be determined, if necessary, by removing the entire sleeve backing.
- The sleeve installation shall be acceptable if both of the following requirements are met:

  a. The maximum dimension of the voids extending to bare metal does not exceed 50 mm.

  b. At least 99% of the metal surface is free of voids extending to bare metal.

  c. The maximum dimension of voids extending to bare epoxy does not exceed 10 cm^2.

  d. At least 97% of the adhesive layer is free of voids and/or lack of adhesive wetting.

Defective areas shall be repaired in accordance with the COMPANY approved, manufacturer recommended installation procedure.

If the sleeve does not meet the acceptance criteria above, the adjacent sleeves shall be tested until acceptable installations are found on both sides of the defective installation. Normal testing frequency can then be re-established.

6.3.13 Hardness

The hardness test shall be conducted at ATT. Three (3) samples of the material, in the as supplied condition, shall be tested for hardness according to the ASTM D2240 method. Only the outer layer shall be tested.

6.3.14 Repairs

Should the shrink sleeve become burned, cracked, or a gap exists between it and the corrosion coating surface, it shall be removed and replaced.

All parties consent to this document being signed electronically - UP&C/JOR/INT/2021/3690

6.4 INSPECTION OF THE APPLIED SYSTEMS

Inspection during the field application shall be a continuous process and points mentioned in table E shall be considered during the inspection process.

Table E Inspection Criteria for HSS Shrink Sleeve applications on field joints

Sr. No.	Required Inspection	Applicable Clause	Frequency
1	Salt Contamination on bare surface	5.2.7	Min one each day
2	Visual Inspection after welding	5.2.3	Each joint
3	Condition of exposed FBE on the ends	5.2.4	Each joint
4	Chamfering of PE at 30o to pipe axis		Each joint
5	Abrasive blasting	5.2.6	Each joint
6	Abrasive condition		Before
7	Environment conditions	5.2.2	Every two hours
8	Condition of compressed air used	5.2.5	Twice a day
9	Dust contamination level of surface	5.2.6	Every 30 joints
10	Surface preparation of exposed FBE	5.2.5	Each joint
11	Surface temperature after pre-heating for epoxy application	6.1.3	Each joint
12	WFT of liquid epoxy	6.1.3	Each joint
13	Heating of applied liquid epoxy, if required	6.1.3	Each joint
14	Application of heat shrink sleeve	6.1.3	Each joint

All parties consent to this document being signed electronically - UP&C/JOR/INT/2021/3690

Sr. No.	Required Inspection	Applicable Clause	Frequency
15	Visual inspection	- No signs of wrinkles, creases, air entrapment. - Ends of the sleeve firmly bonded to the surface of the coated pipe. - smooth external appearance of the sleeve, dimple pattern has disappeared - Adhesive flow evident at sleeve edges	Each joint
16	Holiday Detection	No defect at 5kv/mm + 5kv (ISO 21809-3)	Each joint
17	Adhesion test to Steel and 3 LPE line coating	>4 N/mm at 23°C (ISO 21809-3)	One for 100 joints
18	Impact resistance test	No defect at 5kv/mm + 5kv (ISO 21809-3)	One every 100 joints (on dummy joint)

7. Fusion – Bonded EPOXY (FBE) Powder Coatings

7.1 Coating Identification

The epoxy powder for the base layer of a two-layer coating, Data sheets and application instructions for the coating materials shall meet the qualification requirements defined in this specification.

7.2 Description of the Coatings

The coating consists of one or two layers of FBE powder applied to the pipe and cured. Maximum design temperature shall be same as the existing plant applied coating. Application conditions, tests and acceptable results shall be in accordance with the approved APS.

All parties consent to this document being signed electronically - UP&C/JOR/INT/2021/3690

7.3 Surface Preparation

Surface preparation shall be carried out by abrasive blasting according to the provision of 9.1 to a minimum cleanliness of Sa 2½. The surface profile attained shall be between 50 µm and 100 µm as measured in accordance with ISO 8503-5 if not included in the coating material technical data sheets. The plant-applied coating shall be roughened for a minimum length of 50 mm each side of the joint. The plant applied coating shall not be removed. Dust contamination shall be a maximum of grade 2, measured in accordance with ISO 8502-3.

7.4 Application of the Coatings

7.4.1 General

Application of the coating shall be carried out in accordance with the approved APS.

7.4.2 Transport and Storage of EPOXY Powder

Powder shall be transported and stored in a sealed container that prevents the ingress of water.

Temperature shall be controlled to meet the manufacturer's requirements and conformance shall be demonstrated by temperature-indication tags or other logging devices. If necessary, air conditioner shall be provided to maintain the required temperature.

7.4.3 Heating

The field joint area shall be uniformly preheated, using an induction-heating coil, to a temperature as recommended by the powder manufacturer and in accordance with the APS.

If not specified, pipe shall be uniformly heated in excess of the minimum application temperature recommended by Manufacturer, and not less than 230 °C (450 °F) for any single reading and maximum of 274 °C (525 °F). Pipe heated to application temperature and not coated for any reason shall be re-blasted after cooling to ambient temperature.

Pipe temperature shall be monitored just before coating application using a calibrated temperature-measuring device to ensure that the application conditions are fully satisfied and that the temperature is uniform across the steel substrate and the plant-applied coating. The heating time and the temperature shall not:

- Result in oxidation of the surface of the steel detrimental to the quality of the FJC;
- Damage the plant-applied coating.

Parent pipeline coating that would be damaged (for example and not limited to - melting, cracking, disbonding) shall be protected during surface preparation and heating.

For heating with an induction coil there shall be no blistering or other damage to the parent coating. If blistering is observed, prevention shall include some or all, but not limited to the following:

All parties consent to this document being signed electronically - UP&C/JOR/INT/2021/3690

- Reduction in the rate of heating
- Reduction in the size of the coil
- Introduction of a pre-heat or pre-heat station allowing adequate time and heat for FBE moisture egress without parent coating damage.

7.4.4 Application of EPOXY Powder

The FBE shall be applied immediately after the substrate has attained the correct temperature, as specified in the APS.

The FBE overlap onto the plant-applied coating shall be of 25 – 50 mm. The FBE powder shall be uniformly applied, by means of a semi-automatic powder ring or carriage that is fitted to and rotates around the pipe to cover the blast-cleaned and preheated surface, to provide the specified minimum dry film thickness (DFT). Alternative methods may be used with the COMPANY approval.

The coating shall be cured in accordance with the APS. The cured, field applied FBE shall not be over-coated with another layer of FBE.

7.4.5 Field Joint Coating Repairs

A maximum of 3 repairs shall be allowed per FJC. For an FBE FJC with greater than 3 holidays, the FJC shall be stripped and recoated.

Patch sticks shall not be used to repair FBE coating. A qualified two-part epoxy shall be used to make all repairs to damaged FBE. Apply epoxy coating following Manufacturer's application instructions.

Prior to applying the coating repair material, the surface shall be prepared using abrasive paper or pads, cleaned and roughened.

All repairs shall have a minimum dry film thickness at least equal to the minimum specified coating thickness for the FJC. The overlap of the repair coating onto the FJC shall be a minimum of 25 mm.

All repairs shall be holiday tested as described in 9.5.3. Testing of the repair material shall be included in the PQT.

All parties consent to this document being signed electronically - UP&C/JOR/INT/2021/3690

7.5 Testing of the Applied Coatings

The acceptance criteria shall be in accordance with Table F.

Table F Minimum coating properties for FBE coating systems

Property	Requirement	Section
Visual appearance	No blisters, scratches or any other irregularities	7.5.1
Total Dry Film thickness, µm (mil)	400 µm (16 mils) min. 1LFBE 800 µm (32 mils) min. 2LFBE	7.5.2
Holiday test	No holidays	7.5.3
Adhesion	> 10 N/mm^2 (1450 psi) rating 1	7.5.4
Impact	> 5 J/mm (94 ft-lb/in)	7.5.5
Indentation	< 0.2 mm at 23 °C (0.008 in at 73 °F) < 0.4 mm (0.016 in) at Tmax	7.5.6
Flexibility	No holidays	7.5.7
Hot water soak 28 days	No blistering ≤ rating 2 > 7 N/mm^2 (1000 psi) > 2 % strain	7.5.8
Cathodic disbonding	See Table F	7.5.9
Thermal ageing 100 days	No blistering ≤ rating 2 > 7 N/mm^2 (1000 psi) > 2 % strain	7.5.10
Degree of cure	ΔTg value shall be between –2 °C (28 °F) and +3 °C (37 °F).	7.5.11

All parties consent to this document being signed electronically - UP&C/JOR/INT/2021/3690

Property	Requirement	Section
Microscopic examination	No voids Maximum rate 2 for foaming.	7.5.12
Gouge (ARO for HDDs)	< 360 µm (14 mil) gouge depth with 50 Kg (110 lb_m) load using R33 bit.	7.5.13

7.5.1 Visual Appearance

The coating shall be free from blisters, visual holidays, scratches or any other irregularities and shall have a uniform color and gloss.

7.5.2 Coating Thickness

The thickness of the cured FBE coating shall be same as the plant coating thickness. Coating thickness shall be measured on every field joint using a calibrated dry film thickness gauge. The thickness gauge shall be calibrated a minimum of once per 12-hour shift.

For the abrasion resistant outer (ARO) layer, FBE used in horizontal directional drills or slick bores, coating thickness shall be as follows:

System	Base coat	Top coat	Total thickness
Impact/abrasion (Sandy Conditions)	355 µm (14 mils)	762 µm (30 mils)	1120 µm (44 mils)
Impact/abrasion (Rocky Conditions)	355 µm (14 mils)	1270 µm (50 mils)	1625 µm (64 mils)

The coating shall be cured in accordance with the Manufacturer's recommendations. The coating thickness shall be measured in accordance with (Annex B.1).

7.5.3 Holidays

The coating system shall be free from holidays that are indicated when tested in accordance with (Annex B.2). The test voltage shall be 5 kV/mm (0.127 kV/mil).

All parties consent to this document being signed electronically - UP&C/JOR/INT/2021/3690

7.5.4 Adhesion

The adhesion of the coating system on the pipe surface and the plant coating shall be tested. The adhesion of the coating system shall be such that any attempt to remove the coating shall result in a cohesive break in the coating material and not in an adhesive failure of the coating/substrate interface (maximum rating 1) when tested in accordance with (Annex B.3).

The adhesion of the coating system shall also be tested by the dolly pull-off method in accordance with (Annex B.3). The pull-off adhesion strength shall be more than 10 N/mm^2 (1450 psi) and the failure mode shall be cohesive for more than 75 % of surface area.

7.5.5 Impact Resistance

The impact resistance of the coating system at ambient temperature shall be more than 5 J/mm (94 ft-lb/in) when tested in accordance with the procedure in (Annex B.7).

7.5.6 Indentation Resistance

The indentation shall be not more than 0.2 mm (0.008 in) at 23 °C (73 °F) and 0.4 mm (0.016 in) at the Maximum Design temperature when tested in accordance with (Annex B.8).

7.5.7 Flexibility

The flexibility of the coating shall be such that holidays do not appear when tested in accordance with (Annex B.13). At 0 ºC (32 °F) a 2 % strain and at 23 °C (73 °F) a 3 % strain shall be induced in the coating of the sample.

For offshore reeling applications (≤ 18 mils DFT) at 0 °C (32 °F) a 2.6 % strain shall be induced in the coating of the sample.

7.5.8 Hot Water Soak

Hot water resistance shall be tested in accordance with (Annex B.9) at a test temperature related to the Maximum Design temperature. The duration of the test shall be 28 days. After the exposure, the coating shall show no significant evidence (less than 10 % of the test area) of blistering or disbonding and shall show an adhesion rating of maximum 2 when tested in accordance with (Annex B.3).

The adhesion of the coating system on the pipe surface and the plant coating shall also be tested by the dolly pull-off method (Annex B.3). The pull off adhesion strength shall be more than 7 N/mm2 (1000 psi) and the major failure mode (> 75 % of surface area) shall be cohesive.

The flexibility of the coating after exposure shall be such that holidays do not appear when it is tested in accordance with the procedure in (Annex B.2) when 2 % strain at 23 ºC (73 °F) shall be induced in the coating of the sample.

All parties consent to this document being signed electronically - UPTC/JOR/INT/2021/3690

7.5.9 Cathodic Disbonding Resistance

Cathodic disbonding shall be tested in accordance with (Annex B.6) at a test temperature related to the operating temperature. The duration of the test shall be 28 days. After the test, the maximum radius of disbonding shall be less than the value given Table G.

Table G: Cathodic disbonding resistance for FBE coatings

Maximum Design Temperature, °C (°F)	Test Temperature, °C (°F)	Maximum Disbonding Radius, mm (in)
< 20 (<68)	20 ± 2 (68 ± 3.6)	5 (0.2)
20 to 60 (68 to 140)	60 ± 2 (140 ± 3.6)	10 (0.4)
60 to 80 (140 to 176)	80 ± 2 (176 ± 3.6)	10 (0.4)
> 80 (>176)	Maximum design temperature ± 2 (± 3.6)	10 (0.4)

7.5.10 Thermal Ageing

Thermal ageing resistance shall be tested in accordance with (Annex B.12) at a test temperature related to the Maximum Design temperature. The duration of the test shall be 100 days. After the exposure, the coating shall show no significant evidence (less than 10 % of the test area) of blistering or disbonding and shall show an adhesion rating of maximum 2 when tested in accordance with (Annex B.13).

The adhesion of the coating system on the pipe surface and the plant coating shall also be tested by the dolly pull-off method (Annex B.3). The pull off adhesion strength shall be more than 7 N/mm^2 and the major failure mode (> 75 % of surface area) shall be cohesive.

The flexibility of the coating after exposure shall be such that holidays do not appear when it is tested in accordance with the procedure in (Annex B.13) when 2 % strain at 23 °C (73 °F) shall be induced in the coating of the sample. Manufacturer's data shall be submitted to the COMPANY for approval.

All parties consent to this document being signed electronically - UP&C/JOR/INT/2021/3690

7.5.11 Degree of Cure

The degree of cure shall be determined by differential scanning calorimetry in accordance with Annex B.5 to determine the glass transition temperature (Tg) and the enthalpy (Hr) of the curing of the powder. The ΔTg value shall be between –2 °C (28 °F) and +3 °C (37°F).

7.5.12 Microscopic Examination

A sample of the applied coating shall be examined for the presence of foaming, voids and contamination in accordance with NACE RP0394. The maximum degree of foaming shall be 2, both through-film and across-film. The coating interface shall be free of contamination by foreign matter.

7.5.13 Gouge Testing

When the field joint coating will be used on piping employed in horizontal directional drills or slick bores, the applied coating shall be examined for resistance to gouging

8. Liquid Coatings

8.1 Coating Identification

Liquid coatings shall be identified in the APS and shall meet the requirements of this specification. Maximum design temperature shall be as specified in the pipeline data sheets.

8.2 Description of the Coatings

The coating consists of an epoxy and polyurethane resin applied by spray, roller or brush.

8.3 Surface Preparation

Surface preparation shall be carried out by abrasive blasting according to the requirements of item 9 to a minimum cleanliness of Sa 2½. The surface profile attained shall be between 50 µm and 100 µm (if not specified in the product technical data sheets) as measured in accordance with the requirements of ISO 8503-5.

The plant-applied coating shall be beveled and roughened for the minimum length according to the overlap on the plant coating (min. 50 mm). The plant-applied coating shall not be removed or contaminated by abrasive dust.

Dust contamination shall be a maximum of grade 2, measured in accordance with ISO 8502-3. If liquid coatings are used in conjunction with a polyolefin plant-applied coating, the plant-applied coating surface may be subject to additional treatments according to the FJC manufacturer's instructions. Such treatments shall be included in the APS and qualified by a PQT.

All parties consent to this document being signed electronically - UP&C/JOR/INT/2021/3690

8.4 Application of the Coating

8.4.1 General

Application of the coating shall be carried out in accordance with the APS. The manufacturer's instructions, including pot life, thinners, spray guns, tips, nozzles and painter safety, shall be followed.

8.4.2 Heating

If applicable, heating using an induction coil or any other method shall be carried out in accordance with the APS.

The temperature of the field joint shall be monitored using a temperature-measuring device (e.g. hand-held, direct-reading thermocouple or contact thermometer) to ensure that the application conditions are fully satisfied and that the temperature is uniform across the steel substrate and the plant-applied coating. The methods of monitoring and recording shall be specified in the APS.

The heating time and the temperature shall not

- Result in oxidation of the surface of the steel detrimental to the quality of the FJC;
- Damage the plant-applied coating.

8.4.3 Liquid Coatings Application

Coating, including primer if required, shall be applied in accordance with the APS. The wet-film thickness shall be checked using a wet-film thickness comb. Insufficient film thickness, bare areas and pinholes shall be corrected within the over-coating time and in accordance with the APS. The overlap with the plant-applied coating shall be not less than 50 mm, unless otherwise specified.

8.5 Testing of the Applied Coatings

The acceptance criteria for liquid coatings shall be in accordance with Table H.

All parties consent to this document being signed electronically - UP&C/JOR/INT/2021/3690

Table H Acceptance criteria for liquid coatings

Property	Requirement	Section
Visual appearance	Free from blisters, scratches, etc.	8.5.1
Total thickness	Same as or higher than the factory applied coating	8.5.2
Holiday test	No holidays	8.5.3
Hardness Shore D	In accordance with Manufacturer's specification	8.5.4
Adhesion	rating 1 > 10 N/mm^2 (1450 psi)	8.5.5
Impact	5 J/mm (at 23 °C) [94 ft-lb/in at 73 °F] 3 J/mm (at 0 °C) [56 ft-lb/in at 32 °F]	8.5.6
Indentation	< 0.2 mm (at 23 °C) [0.008 in at 73 °F] < 0.4 mm (0.016 in) (at Tmax)	8.5.7
Flexibility	No holidays	8.5.8
Hot water soak 28 days	No blistering (less than 10 % of the test area) ≤ rating 2 > 7 N/mm^2 (1000 psi) > 2 % strain	8.5.9
Cathodic disbonding	see Table H	8.5.10
Thermal ageing 100 days	No blistering ≤ rating 2 > 7 N/mm^2 (1000 psi) > 2 % strain	8.5.11

8.5.1 Visual Appearance

The coating shall be free from blisters, visual holidays, scratches or any other irregularities and shall have a uniform color and gloss.

All parties consent to this document being signed electronically - UP&C/JOR/INT/2021/3690

8.5.2 Coating Thickness

The minimum thickness of the coatings shall be as specified and shall not be less than the Manufacturer's recommendation. The liquid epoxy coating shall be applied in accordance with Manufacturer's recommendations. The coating thickness shall be measured in accordance with (Annex B.1).

8.5.3 Holidays

The coating system shall be free from holidays when tested in accordance with (Annex B.2). A maximum of 3 repairs shall be allowed per FJC. For an LE FJC with greater than 3 holidays, the FJC shall be stripped and recoated. All coating repairs shall be made with the liquid epoxy selected.

If not specified, the test voltage shall be 5 kV/mm (0.13 kV/mil).

8.5.4 Shore D Hardness

Shore D hardness shall be in accordance with the Manufacturer's specification. The test shall be carried out in accordance with the method defined in ISO 868.

8.5.5 Adhesion

The adhesion of the coating system on the pipe surface and the plant coating shall be tested. The adhesion of the coating system shall be such that any attempt to remove the coating shall result in a cohesive break in the coating material and not in an adhesive failure of the coating/substrate interface (maximum rating 1) when tested in accordance with (Annex B.3).

The adhesion of the coating system shall also be tested by the dolly pull-off method in accordance with (Annex B.3). The pull-off adhesion strength shall be more than 10 N/mm^2 and the failure mode shall be cohesive for more than 75 % of surface area.

8.5.6 Impact Resistance

The impact resistance of the coating system at ambient temperature shall be more than 5 J/mm at 23 °C (94 ft-lb/in at 73 °F) and 3 J/mm at 0 °C (56 ft-lb/in at 32 °F) when tested in accordance with (Annex B.7).

All parties consent to this document being signed electronically - UPTC/JOR/INT/2021/3690

8.5.7 Indentation resistance

The indentation shall be not more than 0.2 mm at 23 °C (0.008 in at 73 °F) and not more than 0.4 mm (0.016 in) at the maximum design temperature when tested in accordance with (Annex B).

8.5.8 Flexibility

The flexibility of the coating shall be such that holidays do not appear when tested in accordance with (Annex M). At 0 °C (32 °F) a 2 % strain, and at 23 °C (73 °F) a 3 % strain, shall be induced in the coating of the sample.

8.5.9 Hot Water Resistance

Hot water resistance shall be tested in accordance with (Annex B.9) at a test temperature related to the Maximum Design temperature. The test duration shall be 28 days. After the exposure, the coating shall show no significant evidence (less than 10 % of the test area) of blistering or disbonding and shall show an adhesion rating of maximum 2 when tested in accordance with (Annex B.3).

The adhesion of the coating system on the pipe surface and the plant coating shall also be tested by the dolly pull-off method (Annex B.3). The pull off adhesion strength shall be more than 7 N/mm^2 (1000 psi) and the major failure mode (> 75 % of surface area) shall be cohesive.

The flexibility of the coating after exposure shall be such that holidays do not appear when it is tested in accordance with the procedure in (Annex 13) with 2 % strain induced in the coating of the sample at 23 °C (73 °F).

8.5.10 Cathodic Disbonding Resistance

Cathodic disbonding shall be tested in accordance with (Annex B.6) at a test temperature related to the Maximum Design temperature. The duration of the test for coating qualification shall be 28 days. After the test, the maximum radius of disbonding shall be less than the value given in Table I.

All parties consent to this document being signed electronically - UP&C/JOR/INT/2021/3690

Table I: Cathodic disbonding resistance for liquid coatings

Maximum Design Temperature, °C (ºF)	Test Temperature, °C (˚F)	Maximum Disbonding Radius, mm (in)
< 20 (<68)	20 ± 2 (68 ± 3.6)	5 (0.2)
20 to 60 (68 to 140)	60 ± 2 (140 ± 3.6)	10 (0.4)
60 to 80 (140 to 176)	80 ± 2 (176 ± 3.6)	10 (0.4)
> 80 (>176)	Maximum design temperature ± 2 (± 3.6) (but no higher than 95 ±2(200 ± 3.6))	10 (0.4)

8.5.11 Thermal Ageing

Thermal ageing shall be tested in accordance with (Annex B.12) at a test temperature related to the Maximum Design temperature. The duration of the test shall be 100 days. After the exposure, the coating shall show no significant evidence (less than 10 % of the test area) of blistering or disbonding and shall show an adhesion rating of maximum 2 when tested in accordance with (Annex B.3).

The adhesion of the coating system on the pipe surface and the plant coating shall also be tested by the dolly pull off method (Annex B.3). The pull off adhesion strength shall be more than 7 N/mm^2 (1000 psi) and the major failure mode (> 75 % of surface area) shall be cohesive.

The flexibility of the coating after exposure shall be such that holidays do not appear when it is tested in accordance with the procedure in (Annex B.13) with 2 % strain induced in the coating of the sample at 23 °C (73 °F). Manufacturer's data shall be submitted to the COMPANY for approval.

9. Urethane Filling

For Offshore Field joint coatings, Polyurethane casting shall be used to fill the height upto the concrete weight coating thickness. It is necessary for smooth laying of the pipe from a Barge.

All parties consent to this document being signed electronically - UP&C/JOR/INT/2021/3690

10. Coating Materials Handling & Storage

The APPLICATOR shall obtain from the material MANUFACTURER copies of their most recent technical data sheets describing the product, its general performance, and application requirements. The APPLICATOR shall obtain from the MANUFACTURER certification for each batch or lot of material to be used that includes basic physical properties of the coating materials.

All coating materials shall be furnished in unopened, clearly identified containers that include details of the material, batch number, and date of manufacturing. Coating materials handling, including storage, shall be as recommended by the MANUFACTURER. Material shall not be used after its expiration date. Contaminated material and material showing any sign of degradation shall not be used. All materials shall be approved by the COMPANY.

Appendix A: General Coating Requirements

Design Temperature	Coating General Requirements
⩽ 80°C	- 3LPE coating shall be used – Thickness shall be minimum 3 mm & with accordance to ISO 21809-3. - Tg_2 of FBE primer shall be min. 5°C above the pipeline design temperature - Field joint coating shall be PE heat shrink sleeve and epoxy primer with the same characteristics. - Coating repairs at shop & field shall be proposed by the CONTRACTOR & shall be part of PQT - Above ground portions of the pipeline shall be protected against UV using a long term UV resistant cold wrapping tape or equivalent suitable for 80°C
⩽ 105°C	- 3LPP coating shall be used. - Thickness shall be minimum 3 mm & with accordance to ISO 21809-3. - Tg_2 of FBE primer shall be min. 5°C above the pipeline design temperature. - Field joint coating shall be PP heat shrink sleeve and epoxy primer with the same characteristics. - Coating repairs at shop and field shall be proposed by the CONTRACTOR and shall be part of the PQT.

All parties consent to this document being signed electronically - UPTC/JOR/INT/2021/3690

Design Temperature	Coating General Requirements
	- Above ground portions of the pipeline shall be protected against UV using a long term UV resistant cold wrapping tape or equivalent suitable for 100°C
⩽ 120°C	- 2LFBE coating shall be used - Thickness shall be 2 x 400 µm - Tg_2 of the first layer shall be min. 5°C above the pipeline design temperature. - Field joint coating shall be a spray applied liquid epoxy or FBE - Coating repairs at shop & field shall be proposed by the CONTRACTOR & shall be part of PQT - Above ground portions of the pipeline shall be protected against UV using a long term UV resistant cold wrapping tape or polyurethane paint suitable for 120°C

Appendix B: Test Method

B.1 Inspection of Thickness

B.1.1 General

The inspection consists of measuring the thickness of the FJC.

B.1.2 Equipment

The coating thickness shall be measured by means of a thickness meter based on eddy current or electromagnetic techniques, in accordance with ISO 2808, Method 6A or 6B.

Magnetic thickness gauges shall not be used, either for qualification testing or for quality control purposes.

B.1.3 Procedure

At the start of each shift, the instrument readings shall be checked using calibrated plates and shims of the same thickness and temperature range as the FJC and, if necessary, be adjusted.

All parties consent to this document being signed electronically - UP&C/JOR/INT/2021/3690

On each FJC being inspected, a total of eight measurements shall be carried out on the body of the pipe.

The measurements shall be taken at points distributed along four equally spaced longitudinal lines along the pipe length with two circumferential lines, one on each side of the weld bead. In addition, four additional measurements shall be carried out on a circumferential line on top of the weld bead.

For measuring a thickness of less than 1 mm, the surface profile of the joint shall be taken into account for calibration.

B.1.4 Results

The minimum value for the body and for the weld bead shall be recorded.

B.2 Holiday Detection Test

B.2.1 General

The test consists of detecting any porosity of the FJC using a scanning electrode energized by a high arc voltage. Defects shall be detected by a spark occurring between the steel and the electrode at the defect, accompanied by a sound and/or light signal.

B.2.2 Equipment

B.2.2.1 Holiday detector, adjustable, high-voltage, with ±10 % reading accuracy, equipped with a sound and/or light signal.

B.2.2.2 Scanning electrode, in the form of a metal brush, coiled spring with continuous spirals or conductive rubber conforming to the shape of the joints.

B.2.2.3 Conductors, connecting the joint to an earth electrode.

B.2.3 Procedure

The test shall be performed only on a coating that is free from surface moisture.

The instrument (holiday detector) and earth shall be connected to the coated pipe. The scanning electrode shall be passed over the surface of the coating being inspected with a continuous, relative movement not exceeding 300 mm/s.

All parties consent to this document being signed electronically - UP&C/JOR/INT/2021/3690

The electrode shall not be damaged and shall be in constant touch with the coating. At the time of the test, the voltage shall be set at a value depending on the material and the nominal thickness of the coating.

B.2.4 Results

The number of holidays shall be recorded. All holidays shall be marked.

B.3 Adhesion Test – Resistance to Removal

B.3.1 General

The coating adhesion shall be measured by different methods, depending on the coating type used. For liquid coating types and FBE, the adhesion shall be measured by dolly pull-off measurements and the X-cut method. The adhesion strength of the coating shall be tested by a pull-off test according to ISO 4624.

B.3.2 Equipment

B.3.2.1 Utility knife, e.g. with a stiff, straight blade.

B.3.2.2 Steel rule, if required.

B.3.2.3 Steel rod, if required.

B.3.3 Procedure

The adhesion test shall be done at 20 °C ± 5 °C unless otherwise agreed.

The test area shall consist of any coated area on the component or test sample that is free from all defects and with the correct dry film thickness.

Using a sharp-bladed utility knife, against a steel rule if necessary, straight, 30 mm to 50 mm cuts shall be made in the coating through to the metal surface to form an “X” with an angle of approximately 30° at the intersection point.

The point of the utility knife shall be inserted horizontally (i.e. the flat of the blade) under the coating at the point of intersection of the cuts such that the blade point is at the metal surface. A levering action

All parties consent to this document being signed electronically - UPTC/JOR/INT/2021/3690

against a fulcrum (such as a steel rod) shall be used to force the flat point of the blade up from the metal surface describing a single, vertical (i.e. at 90° to the surface) motion in an attempt to prize the coating off.

B.3.4 Results

The adhesion of the coating shall be determined by the rating system shown in Figure B.3.1.

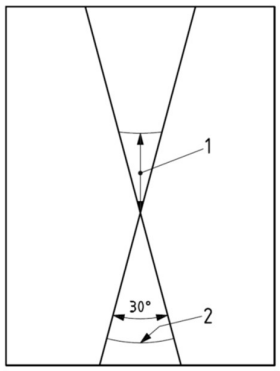

Key

1 : adhesive loss of coating (rating 1 to 5) a

2 : cuts

a : Ratings 1 to 5:

rating 1: no removal of coating other than that caused by insertion of the flat point of the knife blade at the intersection point (nominally less than 1 mm);

rating 2: not more than 2 mm of adhesive loss of coating from the metal surface;

rating 3: not more than 3 mm of adhesive loss of coating from the metal surface;

rating 4: not more than 5 mm of adhesive loss of coating from the metal surface;

rating 5: more than 5 mm of adhesive loss of coating from the metal surface.

Figure B.3.1 — Adhesive loss of coating — Ratings 1 to 5

All parties consent to this document being signed electronically - UP&C/JOR/INT/2021/3690

The rating of the coating adhesion is determined by adhesive failure. Limited cohesive rupture within the coating shall be considered a pass, if there is satisfactory adhesion. Cohesive rupture caused by excessive interface or cross-section porosity leaving a noticeable “honeycomb “structure on the sample surface shall constitute a fail. The rating shall be recorded.

B.4 PEEL Strength Test

B.4.1 Measurement of the peel strength with a tensile testing machine

For the polymeric coatings (example: Heat Shrink Sleeves, polyethylene/polypropylene etc.), the peel test method shall be used. The coating adhesion shall be determined by measuring the peel strength, i.e., the force required to peel a strip of coating from the pipe surface. The test method shall not use a force gauge of the spring balance type.

For testing at elevated temperatures, a sample of pipe shall be conditioned for at least 1 h at the test temperature. The test shall be carried out under conditions that ensure that the temperature of the outer steel surface is maintained at the required test temperature. The surface temperature shall be monitored during the test and the results reported.

The procedure and the type of heating equipment shall be proposed by the test laboratory and approved by the Company.

B.4.1.1 General

The test consists of measuring the force required for peeling the FJC from the metal substrate of the joint at a constant rate of pull. When specified, the method also shall be used to measure the force required for peeling the FJC from the plant coating at overlap.

B.4.1.2 Equipment

1. Tensile testing machine, capable of recording the peel force with ± 5 % reading accuracy, that operates at a rate of pull of 10 mm/min ± 1 mm/min, as shown in Figure B.4.1 for small diameters or as in Figure B.4.2 for large diameters.
2. Cutting tool, e.g. knife.
3. Equipment, as suggested in Figures B.4.1 or B.4.2

All parties consent to this document being signed electronically - UP&C/JOR/INT/2021/3690

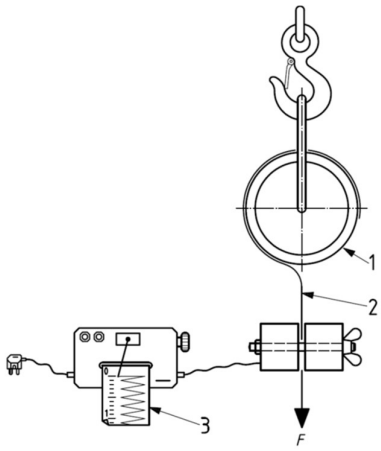

Key

1 pipe ring

2 coating strip

3 registration unit

F peel force

Figure B.4.1 — Peel-strength test equipment for a small-diameter joint

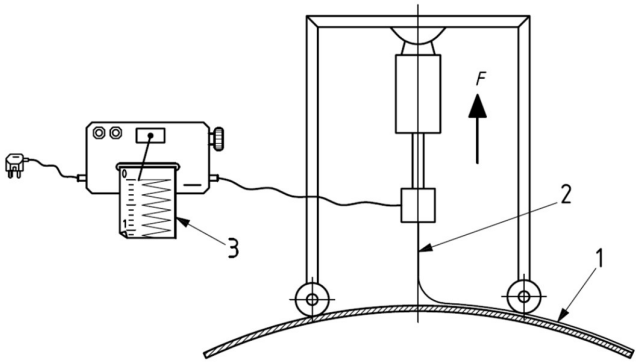

Key

1 coated pipe surface

All parties consent to this document being signed electronically - UP&C/JOR/INT/2021/3690

2 coating strip

3 registration unit

F peel force

Figure B.4.2 — Peel-strength test equipment for a large-diameter joint

B.4.1.3 Procedure

A. General

The peeling test for ambient temperature shall be performed at the specified temperature

The peeling test for maximum design temperature shall be carried out if the maximum design temperature is greater than 30 °C.

A peeling test for other temperatures may be performed if agreed between the APPLICATOR and the Company.

All test temperatures shall be controlled within ± 3 °C.

The temperature shall be measured by means of an adapted probe on the external surface of the joint at the root of the peeled strip.

B. Small-diameter pipes

A pipe ring 200 mm in length shall be cut from the pipe. A sample coating strip shall be cut in the circumferential direction of the pipe ring measuring a minimum of 160 mm long and 20 mm to 50 mm wide.

The pipe ring shall be free to rotate about its axis, as shown in Figure B.4.1. The cut end of the coating strip shall be secured to one of the gripping jaws of the testing machine and peeled perpendicular to the pipe axis.

C. Large-diameter pipes

The pipe shall be supported during the test to prevent movement.

All parties consent to this document being signed electronically - UP&C/JOR/INT/2021/3690

A sample coating strip shall be cut in the circumferential direction of the pipe, measuring a minimum of 160 mm long and 20 mm to 50 mm wide. The cut end of the coating strip shall be secured to one of the gripping jaws of the testing machine and peeled perpendicular to the pipe axis.

B.4.1.4 Results

The peel-force data for 140 mm of peeling shall be divided into seven intervals of 20 mm and the first and last intervals discarded. The peel strength shall be calculated from the remaining data.

The average peel strength shall be the arithmetic mean over the 100 mm length. If this value is not automatically determined, the arithmetic mean may be estimated from the 20 mm bands across the 100 mm length.

The average peel strength shall meet the requirements as specified and no single recorded peeling value shall be more than 30% below the specified value.

B.5 Thermal Analysis of EPOXY Powder and Cured Coating Film (FBE)

B.5.1 General

The uncured epoxy powder and the cured coating film are characterized by thermal analysis. The method used is differential scanning calorimetry (DSC). Reference can be made to ISO 11357-2 for a description of the general procedure and definitions. General handling and calibration shall be performed as in ISO 11357-2, unless stated otherwise in this specification.

B.5.2 Equipment

B.5.2.1 Differential scanning calorimeter (DSC), with cooling accessory.

B.5.2.2 Balance, accurate to 0,1 mg.

B.5.2.3 Sample-encapsulating press.

B.5.2.4 Aluminum pans, with covers.

B.5.2.5 N2 gas supply, dry, analytical grade.

B.5.3 Procedures and measurement for epoxy powder

B.5.3.1 Measurement

- Run (a): Heat the sample from 25 °C ±5 °C to 70 °C ±5 °C at a rate of 20 °C/min, then immediately cool the sample to 25 °C ±5 °C.

All parties consent to this document being signed electronically - UP&C/JOR/INT/2021/3690

- Run (b): Heat the sample from 25 °C ±5 °C to 275 °C ±5 °C at a rate of 20 °C/min, then immediately cool the sample to 25 °C ±5 °C.
- Run (c): Heat the sample from 25 °C ±5 °C to Tg ±40 °C (typically 150 °C) at a rate of 20 °C/min, then immediately cool the sample to 25 °C ±5 °C.

For certain epoxy powders, it can be necessary to use a different heating cycle in accordance with the instructions of the epoxy powder manufacturer.

B.5.3.2 Evaluation of results

a) Glass transition temperature, T_g

The Tg is calculated at the point of the inflection intersection (see Figure B.5.1). By evaluating run (b), the Tg of the uncured powder, Tg1, is obtained. By evaluating run (c), the Tg of the cured material, Tg_2, is obtained.

b) Heat of reaction of epoxy powder

The exothermic heat of reaction, ΔH, is obtained by integrating the exothermic peak of the DSC scan.

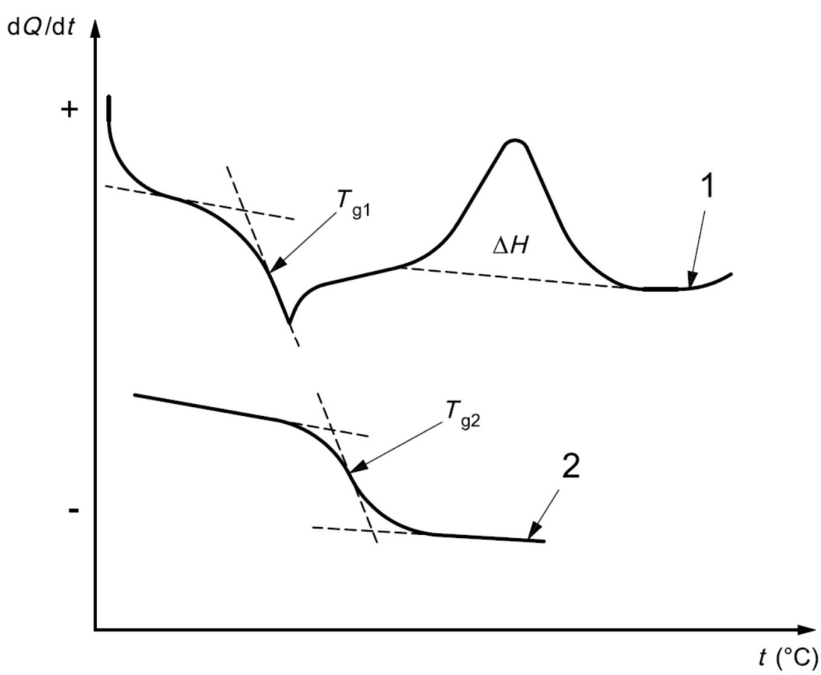

Key

All parties consent to this document being signed electronically - UP&C/JOR/INT/2021/3690

1 run (b)

2 run (c)

Figure B.5.1 — Examples of thermal scans of an epoxy powder

B.5.4 Procedures and measurement for coating sample

B.5.4.1 General

Take a representative sample of the cured film.

Weigh 10 mg ± 3 mg to an accuracy of 0,1 mg. Seal the pan with the cover. Determine the final mass after sealing.

Place the sample and the reference sample in the DSC cell and purge with dry N2 gas.

B.5.4.2 Measurement

- Run (a): Heat the sample from 25 °C ±5 °C to 110 °C ±5 °C at a rate of 20 °C/min and hold for 1,5 min, then cool the sample to 25 °C ±5 °C.
- Run (b): Heat the sample from 25 °C ±5 °C to 275 °C ±5 °C at a rate of 20 °C/min, then cool the sample to 25 °C ±5 °C.
- Run (c): Heat the sample from 25 °C ±5 °C to Tg ±40 °C (typically 150 °C) at a rate of 20 °C/min, then cool the sample to 25 °C ±5 °C.

For certain epoxy powders, it can be necessary to use a different heating cycle in accordance with the instructions of the epoxy powder manufacturer. Samples taken from pipes that have been stored or buried shall be dried before testing.

B.5.4.3 Evaluation of results

A. Glass transition temperature, *T*g

The Tg for the coating is calculated as the inflection point (see Figure B.5.2), for runs (b) and (c), where Tg_3 is the glass transition temperature, expressed in degrees Celsius, of run (b) in B.5.4.2 and Tg_4 is the glass transition temperature, expressed in degrees Celsius, of run (c) in B.5.4.2.

For coatings, determine ΔTg, the change in the value of Tg, expressed in degrees Celsius, using Equation (B.5.1):

$$\Delta Tg = Tg4 - Tg3 \qquad \text{(B.5.1)}$$

All parties consent to this document being signed electronically - UP&C/JOR/INT/2021/3690

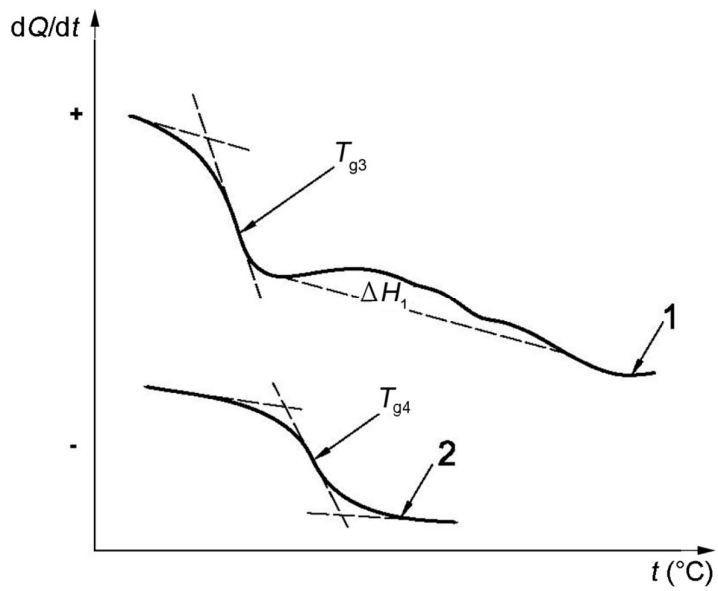

Key

1 run (b)

2 run (c)

Figure B.5.2 — Examples of thermal scans of a coating

B. Residual heat of reaction of cured coating

The exothermic heat of reaction, ΔH1, is obtained by integrating the exothermic peak of run (b) in B.5.4.2.

In a fully cured coating film there should be no residual heat of reaction visible.

The degree of conversion, C, expressed as a percentage, can be calculated from Equation (B.5.2):

$$C = \frac{\Delta H - \Delta H1}{\Delta H1} \text{ X } 100 \qquad \text{(B.5.2)}$$

Where:

ΔH is the exothermic heat of reaction of the powder in run (b) of B.5.3.1.

ΔH_1 is the exothermic heat of reaction of the coating film in run (b) of B.5.4.2.

All parties consent to this document being signed electronically - UP&C/JOR/INT/2021/3690

B.5.4.4 Results

The following information shall be recorded:

- Type of material and batch number
- Date of testing
- Type of DSC equipment
- For the epoxy powder Tg_1, Tg_2, ΔH;
- For the cured coating film Tg_3, Tg_4, ΔTg, ΔH_1 and C.

Testing of production coating requires pipe number or identification.

B.6 Cathodic Disbondment Test

B.6.1 General

The test consists of assessing the resistance to disbondment of damage to the FJC when exposed to cathodic polarization.

The test shall be performed on a test sample taken from the coated components previously subjected to holiday detection (see Annex B.2), and in which an artificial defect of a defined size has been drilled.

B.6.2 Equipment

B.6.2.1 Electrical source, consisting of a controlled voltage DC power unit capable of supplying 20 mA to each test area simultaneously.

Except when otherwise specified, a cathodic polarization potential of -1500 mV to a saturated calomel reference electrode (equivalent to UH equal to -1260 mV where UH is the potential of the standard hydrogen electrode) shall be maintained. The potentials are defined as follows:

– “E” is the potential of the “working electrode” with regard to the “reference electrode”.

All parties consent to this document being signed electronically - UP&C/JOR/INT/2021/3690

– “V” is the difference of potential between the “working electrode” and the “auxiliary electrode”.

B.6.2.2 Electrolytic cell, having a typical test-cell configuration as shown in Figure B.6.1 for large-diameter components and as in Figures B.6.2 and B.6.3 for small-diameter components.

The electrolytic cell shall comprise of:

– A rigid plastic pipe with an internal diameter of minimum 50 mm. The height shall be such that the total volume of the electrolyte is equal to or greater than 150 cm3 with a minimum height of the electrolyte of 70 mm;
– A rigid plastic cover in which holes shall be drilled to allow the passage of the electrodes and any other measuring instruments deemed necessary, and to allow the escape of hydrogen.

Dimensions in millimetres

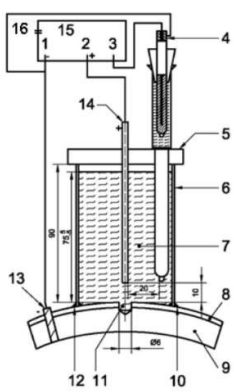

Key

1 working electrode
2 electrode (anode)
3 electrode (reference)
4 reference electrode
5 plastic cover
6 plastic pipe, minimum internal ∅ 50 mm
7 electrolyte ≥ 150 ml
8 coating
9 steel test piece
10 sealing material
11 artificial defect, ∅ 3 mm to 6 mm if coating thickness is less than 1 mm; ∅ 6 mm in other cases
12 sealing material
13 electrode (cathode)
14 platinum electrode, ∅ 0,8 mm to 1,0 mm (anode)
15 potentiostat
16 220 V power supply

Figure B.6.1 Electrolytic cell for large diameter pipe

All parties consent to this document being signed electronically - UP&C/JOR/INT/2021/3690

Dimensions in millimetres

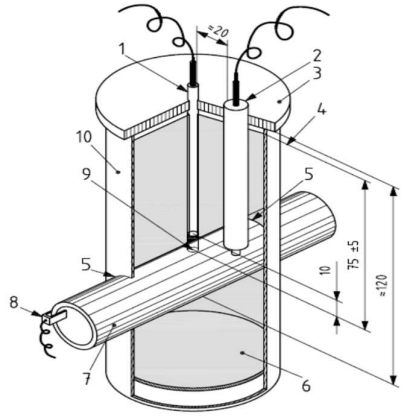

Key

1 platinum electrode, ∅ 0,8 mm to 1,0 mm (anode)
2 reference electrode
3 plastic cover
4 electrolyte level
5 sealing material
6 electrolyte
7 coated pipe
8 working electrode (cathode)
9 artificial defect, ∅ 3 mm to 6 mm if coating thickness is less than 1 mm; ∅ 6 mm in other cases
10 plastic pipe, minimum internal ∅ 50 mm

Figure B.6.2 Electrolytic cell for small-diameter pipe - Example 1

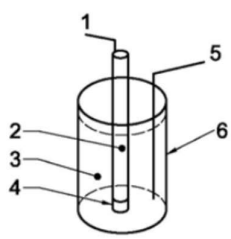

Key

1 to negative lead (–)
2 holiday
3 electrolyte
4 end cap
5 to positive lead (+)
6 beaker

Figure B.6.3 Electrolytic cell for small-diameter pipe - Example 2

B.6.2.3 Electrodes

1. Reference electrode, capable of giving a suitable potential (see B.6.2.1) and suitable for the test temperature required, placed in an electrode holder situated in a glass pipe with a porous end diaphragm. The end of this assembly shall be placed approximately 10 mm from the surface of the coating and approximately 20 mm from the coating defect.

All parties consent to this document being signed electronically - UP&C/JOR/INT/2021/3690

2. Auxiliary electrode (anode), consisting of an inert material, e.g. platinum wire, 0,8 mm to 1,0 mm in diameter. It shall be immersed in the electrolyte to within approximately 10 mm over the coating defect. The ratio of the surface area of the anode to that of the cathode shall be greater than 1.
3. Working electrode (cathode), represented by the artificial defect, 6 mm in diameter, with a maximum depth of 0,5 mm in the steel substrate (see Figure B.6.4).
4. Electrolyte, consisting of a 3 % solution of NaCl in distilled or deionized water.
5. The solution shall be made from sodium chloride. The pH at 23 °C ± 2 °C during the test shall be in the range of 6 to 9. The height of the electrolyte in the cell shall be 75 mm ± 5 mm.
6. Heating equipment, suitable to establish and to maintain the test temperature of the sample. If not heated in an oven, the temperature shall be checked on the artificial defect by an appropriate means, e.g. a temperature sensor.

B.6.3 Sampling

The test sample shall be cold cut from a coated component and shall have a minimum size of 80 mm x 80 mm, unless the test is performed on the body of the coated component. Unless otherwise specified by Company, tests samples shall not be taken from the weld area. For each sample, the thickness of the area of the coating subject to the test shall be measured and recorded.

The integrity of the coating on all test samples shall be checked by holiday detection (see Annex B.2).

A 6 mm diameter hole (see Figure B.6.4) shall be drilled through the coating in the center of the test sample using a standard drill bit. The depth of the drilled hole in the steel substrate shall not exceed 0,5 mm. At the initiation of the test, the total surface area subject to the test shall be free from residual coating.

The test area shall be degreased using a suitable solvent and then rinsed with potable water and subsequently dried.

All parties consent to this document being signed electronically - UP&C/JOR/INT/2021/3690

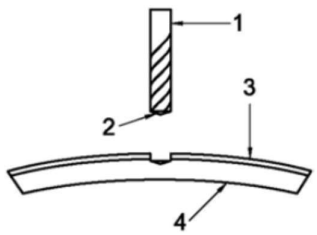

Key

1 fluted and mill face mill ∅ 3 mm to 6 mm if coating thickness is less than 1 mm; ∅ 6 mm in other cases
2 conic end
3 coating
4 steel

Figure B.6.4 Drilling of Artificial Detect

B.6.4 Procedure

The plastic pipe forming the electrolytic cell shall be sealed using a suitable sealant, e.g. a chemically inert adhesive. The artificial defect shall be in the center of the cell. The cell shall be filled with the NaCl electrolyte (B.6.2.4). The test temperature shall be controlled within ± 2 °C.

A negative cathodic potential shall be applied between the reference and working electrodes (see Figures B.6.1, B.6.2 and B.6.3), with an accuracy of ± 10 mV. If a saturated calomel electrode is used, the potential shall be -500 mV.

The test shall be performed for the test period required. The level of the electrolyte shall be readjusted with distilled or deionized water, if necessary.

B.6.5 Investigation procedure

After the test, the cell with the electrolyte shall be removed. The test sample shall be rinsed with water and dried. After drying, the area of the coating subjected to the test shall be examined in accordance with the following method.

- Inspect and assess each coating immediately after the test period.
- Detach the plastic pipe from the test site.
- Using a lint-free paper towel, wipe along the surface of the coating and cathode area to remove moisture.

All parties consent to this document being signed electronically - UP&C/JOR/INT/2021/3690

- Make about 12 radial incisions, using a sharp knife, through the coating to the substrate, extending outwards from the holiday for a distance of at least 40 mm. Make these incisions at an angle of approximately 30° from each other.
- Insert the knife point into the center portion of the holiday down to the metal substrate. Using a gentle levering action, peel away slowly a radial section of coating continuing until firm adhesion is encountered.
- As loss of adhesion is not always obvious, carefully examine the substrate for signs of residual coatings, which indicates that disbondment has not occurred.
- Repeat with each radial segment.

NOTE: For thick coatings that cannot be peeled, it is sometimes necessary to remove the coating from the substrate using a chisel to assess the extent of disbondment.

B.6.6 Results

The result of the cathodic disbondment test shall be defined as the arithmetic mean value of the 12 single values. The mean value shall be recorded.

B.7 Impact Test

B.7.1 General

The test consists of verifying the strength of the FJC by the impact of a punch of defined shape falling directly onto the coating from a fixed height and at a fixed temperature. The test shall be carried out on pipes or cut samples. This test shall not be carried out on pipes with a diameter of less than 50 mm.

B.7.2 Equipment

Drop weight testing machine, consisting of the following:

- Straight guide made of steel, aluminum or plastic, rigid and non-deformable, with an inside diameter between 40 mm and 60 mm, length at least 1,30 m and incorporating a smooth and even inside surface

All parties consent to this document being signed electronically - UP&C/JOR/INT/2021/3690

- Support and levelling device (for example, two spirit levels for the horizontal plane and a plumb-line for the vertical plane)
- Graduated rod, to determine the drop height to an accuracy of 5 mm
- Hard steel punch, with a hemispherical head, free from notches, porosity or other surface irregularities and with a diameter of 25 mm (A small metal rod with a diameter of 6 mm shall be fixed perpendicular to the flat face of the head and in its center, this rod shall be long enough to hold the additional weights required for the tests. The punch shall be equipped with a system for raising it to the required height; the mass of this assembly shall be 1 ± 0,005 kg.
- Number of weights, formed of metal discs (preferably made of stainless steel) with an outside diameter of approximately 24 mm and incorporating a central hole of diameter 6,5 mm. The mass of each disc shall have an accuracy of ±5 g. Other guides may be used by agreement.

B.7.3 Procedure

The test shall be carried out at a temperature of 20 °C ± 5 °C. If the test is performed outside this temperature range, the method described shall be adapted, by agreement.

The coated component shall be placed on a rigid, stable, horizontal support, and the component interior shall be supported to reduce its elastic response.

Before carrying out an impact test, the holiday detection test shall be undertaken (see Annex B.2) to identify defective points and to avoid impact testing at these locations. If the number of faults found is too high, another coated test piece shall be taken.

For each point of impact, the drop weight testing machine shall be placed perpendicular to the coating surface. The loaded punch shall fall freely without friction or resistance.

The drop height is 1 m. Ten impacts shall be carried out with the required energy. The points of impact shall be at least 50 mm to the side of the weld bead and/or the pipe end and there shall be at least 50 mm between the axes of the impacts.

The holiday detection test shall then be undertaken at each location (see Annex B.2). The hard steel punch shall be checked every 30 impacts. If damaged, it shall be replaced.

All parties consent to this document being signed electronically - UP&C/JOR/INT/2021/3690

B.7.4 Results

The impact energy and the actual coating thickness shall be recorded.

B.8 Indentation Test

B.8.1 General

The test consists of measuring the indentation of a punch into the FJC under fixed conditions of temperature and load.

B.8.2 Equipment

B.8.2.1 Chamber or bath, thermostatically controlled to ± 2°C;

B.8.2.2 Penetrometer, comprised of

- A cylindrical indenter on the top of which is mounted a weight; the assembly, indenter plus weight, shall produce a pressure in accordance with Table B.8.1;
- Dial gauge or any other measurement system, accurate to ± 0,01 mm.

Table B.8.1 — Pressure, indenter diameter and mass of assembly

Pressure N/mm^2	Indenter diameter Mm	Mass of the assembly kg
0,10	11,2 ± 0,05	1,0
1,00	5,65 ± 0,05	2,5
5,00	1,80 ± 0,05	1,25
10,0	1,80 ± 0,05	2,5

B.8.3 Procedure

B.8.3.1 The test shall be performed three times on one coating sample. For heat-shrink polyolefin sleeves and tapes, the sample may be prepared by stripping the coating from the pipe.

All parties consent to this document being signed electronically - UP&C/JOR/INT/2021/3690

B.8.3.2 The test sample, held within the penetrometer assembly, shall be placed in the thermostatically controlled chamber and set to the test temperature (+/- 2 °C). The test sample shall be kept in the chamber for 1 h.

B.8.3.3 The following readings shall be made.

a) *t*0: is the reading on the dial gauge placed on an uncovered part of the steel plate or pipe.
b) *t*1: is the reading on the dial gauge with the indenter without the mass positioned centrally over the sample.
c) *t*2: is the reading of the dial gauge after the mass, giving the total desired pressure on the indenter for a minimum duration of 24 h.

B.8.3.4 If sampling of the test piece is unpractical (e.g. in the case of large-diameter components), the test can be carried out directly on the coated component in air provided that

a) The surface temperature of the coating is in the range of (20 ± 5) °C, and
b) The experimental assembly (component plus apparatus) is not exposed to heat radiation or vibration during the testing.

B.8.4 Results

The quantities *t*3, the coating thickness; *t*4, the residual thickness of the coating; and *t*5, the indentation into the coating, can be calculated on the basis of the measurements described in H.3.3 using Equations (B.8.1) to (B.8.3), respectively:

$$t3 = t1 - t0 \qquad \text{(B.8.1)}$$

$$t4 = t2 - t0 \qquad \text{(B.8.2)}$$

$$t5 = t1 - t2 \qquad \text{(B.8.3)}$$

The arithmetic mean of the three individual determinations of each of the thicknesses *t*3, *t*4 and *t*5 shall be calculated and recorded.

All parties consent to this document being signed electronically - UP&C/JOR/INT/2021/3690

B.9 Hot-Water Immersion Test

B.9.1 General

This test shall be carried out to assess the comparative resistance of FJC applied to a bare steel substrate and the plant-applied coating to loss of adhesion due to water immersion.

Unless otherwise specified, the test temperature shall be the maximum design temperature of the FJC, with the following limitations.

- If the maximum design temperature of the FJC being tested exceeds 95 °C, the test temperature shall be limited to 95 °C.
- The test temperature shall not be greater than the maximum design temperature of the plant coating.

B.9.2 Equipment

B.9.2.1 Oven, controllable to within 3 °C.
B.9.2.2 Holiday detector.
B.9.2.3 Cylinder, plastic, 150 mm long, with an interior diameter of 75 mm ±3 mm.
B.9.2.4 Knife, pointed, sharp.
B.9.2.5 Adhesive, elastomeric, e.g. silicone sealant.
B.9.2.6 Hacksaw blade, small, “Junior” type or similar.

B.9.3 Sample preparation

B.9.3.1 Laboratory prepared samples

1) FBE and liquid coatings

   Cold cut 100 mm x100 mm x 6 mm plates and apply the FJC material under conditions of application similar to those for a field joint coating.

2) Other coatings

All parties consent to this document being signed electronically - UP&C/JOR/INT/2021/3690

Cold cut 150 mm long, 100 mm diameter pipe sections (coated or bare) and coat these samples with the FJC under conditions of application similar to those for a field joint coating.

B.9.3.2 Samples from qualification trials

a) FBE and liquid coatings

Cold cut 100 mm x 100 mm x 6 mm samples with direct-to-metal joint coating and joint coating applied onto plant coating.

b) Other coatings

Cold cut 150 mm pipe rings with direct-to-metal joint coating and joint coating on plant coating. If the pipe diameter is too large, 100 mm x 100 mm x WT panels may be used with some coating systems.

B.9.4 Preparation of test area

To ensure freedom from holidays, test the prepared panels or rings for holidays with the holiday detector set at the required voltage for the coating system.

B.9.5 Test procedure

The following steps shall be followed :

- Use five samples per coating for evaluation.
- Carry out an initial adhesion test on one sample.
- Attach plastic cylinders onto four samples using the elastomeric adhesive, lightly abrade or flame oxidize the coating surface if required to form a water-resistant seal.
- Allow sealant to set or cure fully. On samples cut from pipes, it can be necessary to cut the bottom of the plastic cylinder to conform to the curvature of the panel.
- Fill the cylinder with 400 ml ± 50 ml of tap water preheated to the test temperature and seal the top opening with a plastic film.

All parties consent to this document being signed electronically - UP&C/JOR/INT/2021/3690

- Place samples into the oven set at test temperature.
- Remove one sample after seven days.
- Allow it to cool to ambient temperature and test the adhesion as specified in Clauses 10 to 12.
- Repeat the adhesion test at intervals of seven days over a period of 28 days.

B.9.6 Results

Report the peel strength, expressed in newtons per millimeter, or the degree of disbondment from the steel substrate and the parent coating.

B.10 Lap Shear Strength

B.10.1 Lap shear strength of tape coatings

B.10.1.1 General

The test consists of measuring the lap shear strength (maximum force per unit area) obtained in shearing a single overlap joint between a plate with metallic surface or plant coating and the FJC by applying a tensile force that is parallel to the bond area and to the major axis of the sample.

B.10.1.2 Equipment

1. Tensile testing machine, in accordance with ISO 5893, allowing the shear force to be recorded and capable of operating at a constant rate of separation of 10 mm/min.
2. Temperature-maintenance equipment, capable of maintaining the sample in the tensile testing machine at the test temperature.
3. Steel plates, 100 mm long and 50 mm wide, or of tape width in the case of narrower tapes.

B.10.1.3 Preparation of the test samples

The metal surface of the steel plate shall be blast cleaned in accordance with ISO 8501-1, grade Sa 2 ½, to give a medium profile in accordance with ISO 8503-2. The steel plates shall be kept clean and dry. Primer and/or coating shall be applied within 8 h.

All parties consent to this document being signed electronically - UP&C/JOR/INT/2021/3690

The plant coating shall be cleaned in accordance with the manufacturer's instructions. The cleaning procedure shall be agreed upon with the manufacturer of the plant coating.

Apply the coating systems (all layers) to one side of the plates in accordance with the manufacturer's instructions, such that the coating overhangs one end by 30 mm to 40 mm, to allow clamping in the testing machine. Store the test samples for a minimum of seven days at 23 °C ±2 °C under a load of 0,01 N/mm^2.

Prior to testing, cut the coating transversely so that the effective shear length is 20 mm.

B.10.1.4 Procedure

The lap shear strength test shall be carried out on

- Five test samples at 23 °C± 2 °C; or
- Five test samples at the maximum design temperature, *T*max, ± 2 °C if this is higher than 30 °C.

Clamp the test sample into the tensile testing machine, ensuring that the plate (metal surface) and the coating system are in the same plane.

For the test at a temperature of 50 °C, precondition the test sample at the specified test temperature for at least 0,5 h.

Maintain the test sample at the specified test temperature throughout the test.

Set the tensile testing machine to a constant rate of separation of 10 mm/min. Record the maximum force.

If the tape breaks instead of shearing, prepare new test samples so that the effective shear length is 10 mm.

Repeat for five test samples.

All parties consent to this document being signed electronically - UP&C/JOR/INT/2021/3690

B.10.1.5 Results

Calculate the arithmetic mean of the five results of the lap shear strength, expressed in newtons per square millimeter.

If the tape breaks, express the lap shear strength as greater than the breaking force, expressed in newtons per square millimeter of bonded area.

B.10.2 Lap shear strength of shrinkable material coatings

B.10.2.1 General

The test consists of measuring the maximum stress obtained in shearing a single overlap joint between two plates with a metallic surface or a plant coating bonded with the adhesive of the shrinkable material by applying a tensile force that is parallel to the bond area and to the major axis of the test sample.

B.10.2.2 Apparatus

See B.10.1.2.

B.10.2.3 Preparation of the test samples

The metal surface of the steel plate shall be blast cleaned in accordance with ISO 8501-1, grade Sa 2 ½, to give a medium profile in accordance with ISO 8503-2. The steel plates shall be kept clean and dry and primer and/or adhesive shall be applied within 8 h. The plant coating shall be cleaned in accordance with the instructions of the shrinkable-material manufacturer.

The cleaning procedure shall be agreed upon with the manufacturer of the plant coating. Coat one side of the plates with the adhesive of the shrinkable material to a thickness of 1 mm. Position a second plate in such a way that the overlap of the two plates is 20 mm. Treat the test samples in accordance with the manufacturer's instructions (pressure, temperature and time). Store the test samples for at least 24 h at 23 °C ± 2 °C. Remove any adhesive that has exuded at the sides during preparation.

All parties consent to this document being signed electronically - UP&C/JOR/INT/2021/3690

B.10.2.4 Procedure

See B.10.1.4.

B.10.2.5 Results

See B.10.1.5.

B.11 PEEL Strength Between Layers

B.11.1 General

The test consists of measuring the peel strength (peeling force per unit width) between two layers of tapes or shrinkable materials.

Peel strength to be determined for

- Inner layer to inner layer,
- Outer layer to inner layer, and
- Outer layer to outer layer.

B.11.2 Equipment

The equipment consists of the following:

B.11.2.1 Tensile testing machine, in accordance with ISO 5893, allowing the peeling force to be recorded and capable of operating at a constant rate of separation of 100 mm/min.

B.11.2.2 Temperature-maintenance equipment, capable of maintaining the sample in the tensile testing machine at the test temperature.

B.11.2.3 Lower support plate, rigid, e.g. of glass, about 50 mm x 300 mm x 5 mm.

All parties consent to this document being signed electronically - UP&C/JOR/INT/2021/3690

B.11.2.4 Upper plate, rigid, e. g. of steel, about 50 mm x 200 mm x 5 mm, with a smooth cellular rubber 1 mm to 3 mm thick on its lower side.

B.11.2.5 Load, capable of producing, together with the upper plate, a combined pressure of 0,01 N/mm^2.

B.11.2.6 Pipe sections, 100 mm in diameter, 100 mm long, for shrinkable material only.

B.11.2.7 Release paper.

B.11.3 Preparation of the test sample

B.11.3.1 General

Condition the samples for a minimum of 24 h at 23 °C ± 2 °C.

B.11.3.2 Tapes

Discard the three outer turns from the roll. Cut strips 250 mm to 280 mm long and 50 mm wide, or of tape width in the case of narrower tapes. Locate one strip of the first tape (Figure B.11.1, key item 6), adhesive side down, on release paper (key item 3) on the lower plate (key item 4). Apply the second tape strip (key item 5) with the same dimensions exactly over the first. At one end, insert a piece of release paper between the two tape strips for 50 mm to 80 mm. Place release paper (key item 3), the rubber coating (key item 2) and the upper plate with the load onto the sample (with a pressure of 0,01 N/mm^2) (key item 1) and store for seven days at 23 °C ± 2 °C.

It is permissible to apply additional supporting films to the outer surfaces of the samples to prevent excessive elongation during the test.

All parties consent to this document being signed electronically - UPTC/JOR/INT/2021/3690

B.11.3.3 Shrinkable materials

Wrap the pipe section (B.11.2.6) circumferentially with two layers of the shrinkable material one after another, in accordance with the manufacturer's instructions. Store for a minimum of 24 h at 23 °C ± 2 °C.

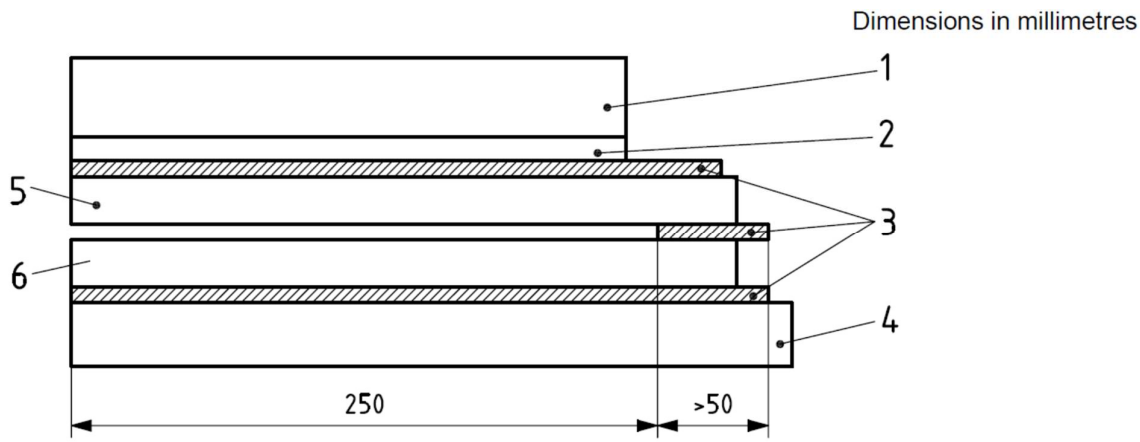

Key

1	plate with load	4	plate
2	rubber coating	5	tape 2
3	release paper	6	tape 1

Figure K.1 -Assembly of the test sample for testing the peel strength between layers

B.11.4 Procedure

B.11.4.1 General

The peel strength test is carried out on

a) Three samples, layer to layer, at 23 °C ± 2 °C;
b) Three samples, layer to layer, at the maximum design temperature, *T*max, ± 2 °C if this is higher than 30 °C.

B.11.4.2 Tapes

All parties consent to this document being signed electronically - UP&C/JOR/INT/2021/3690

Clamp the end of the two tapes into the grips of the tensile testing machine. Precondition the test sample at the specified test temperature for at least 0,5 h and maintain the specified test temperature throughout the test.

Set the tensile testing machine in operation at a constant rate of separation of 100 mm/min. Record the peeling force continuously.

B.11.4.3 Shrinkable materials

Cut the coating with a double saw or knife around the circumference down to the pipe wall to an inside width of 50 mm. Cut the resulting outer strip with a knife perpendicular to the circumference of the pipe and lift the end of the outer strip from the inner strip over a length of about 20 mm.

Clamp the test sample into the grips of the tensile testing machine. Precondition the sample at the specified test temperature for at least 1 h and maintain the test temperature throughout the test.

Set the tensile testing machine in operation at a constant rate of separation of 100 mm/min. Record the peeling force continuously.

B.11.4.4 Results

Calculate the mean value of the peel strength, expressed in newtons per millimeter of width, using at least 20 points at regular intervals. Disregard the first and last 50 mm of the peeling length. If any values are less than 75 % of the specified peel strength, test a further three samples. No further failure is allowed.

The arithmetic mean value of the values for the three test samples shall be recorded.

All parties consent to this document being signed electronically - UP&C/JOR/INT/2021/3690

B.12 Thermal Ageing Resistance

B.12.1 Elongation at break

B.12.1.1 General

The test consists of measuring the effect of exposing test samples of coating materials to dry heat in a thermostatically controlled oven. The effect of ageing is assessed by the change in elongation at break in accordance with ISO 527-2.

B.12.1.2 Equipment

Oven, in accordance with ISO 188 (normal oven method), thermostatically controlled, capable of being set to a temperature of *T*max ± 20 °C to an accuracy of 2 °C. The oven shall be of sufficient size to allow the vertical suspension of test samples without restriction.

B.12.1.3 Preparation of the test samples

Prepare three sheets of material (shrinkable materials after free shrinking according to the manufacturer's instructions), sufficiently large to prepare at least five test samples from each in accordance with ISO 527-3. Identify each sheet as (a), (b) or (c).

B.12.1.4 Procedure

Precondition the test sheets for 7 days at the ageing temperature before testing.

Age the test sheets at *T*max ± 20 °C as follows.

- Store sheet (a) in a dark room at room temperature for 100 days.
- Hang sheet (b) in an oven at the ageing temperature for 70 days, followed by 30 days at room temperature in a dark room.
- Hang sheet (c) in an oven at the ageing temperature for 100 days.

All parties consent to this document being signed electronically - UP&C/JOR/INT/2021/3690

After the ageing period, prepare from each sheet at least five samples in accordance with ISO 527-3 and test all within 8 h for elongation at break under identical conditions in accordance with ISO 527-3 at a test temperature of 23 °C ± 2 °C.

B.12.1.5 Results

For the coating material, calculate the ratios of the elongation at break, *E*:

$E100/E0$

$E100/E70$

Where

*E*0 is the elongation at break without heat ageing (arithmetic mean of five results);

*E*70 is the elongation at break after heat ageing for 70 days (arithmetic mean of five results);

*E*100 is the elongation at break after heat ageing for 100 days (arithmetic mean of five results).

B.12.2 Peel strength between layers

B.12.2.1 General

The test consists of measuring the effect of exposing test samples, prepared in accordance with Clause K.3, to dry heat in a thermostatically controlled oven.

The effect of ageing shall be assessed by the change in peel strength between layers in accordance with Annex (B.11).

All parties consent to this document being signed electronically - UP&C/JOR/INT/2021/3690

B.12.2.2 Equipment

See B.12.1.2.

B.12.2.3 Preparation of the test samples

Prepare three test samples of the following types for each ageing test in accordance Clause (B.11.3):

a) Inner layer to inner layer;
b) Outer layer to inner layer;
c) Outer layer to outer layer.

Identify each sample as (a), (b) or

B.12.2.4 Procedure

Precondition the test samples for 7 days at the ageing temperature before testing.

Age the test samples at *T*max ± 20 °C as follows:

a) Hang sample (a) in a dark room at room temperature for 100 days.
b) Hang sample (b) for 70 days in an oven at the ageing temperature, followed by 30 days at room temperature in a dark room.
c) Hang sample (c) for 100 days in an oven at the ageing temperature.

After the ageing period, test all samples within 8 h for peel strength between layers under identical conditions in accordance with Clause B.11.4 at a test temperature of 23 °C ± 2 °C.

B.12.2.5 Results

Calculate the arithmetic mean of the peel strength in accordance with B.11.4.4.

Calculate the following ratios of peel strengths:

$$P2100/P20$$

$$P2100/P270$$

Where

All parties consent to this document being signed electronically - UP&C/JOR/INT/2021/3690

$P2_0$ is the peel strength between layers at 23 °C without heat ageing;

$P2_{70}$ is the peel strength between layers at 23 °C after heat ageing for 70 days;

$P2_{100}$ is the peel strength between layers at 23 °C after heat ageing for 100 days.

B.12.3 Peel strength to pipe surface

B.12.3.1 General

The test consists of measuring the effect of exposing test pipes with a coated metallic surface to dry heat in a thermostatically controlled oven. The effect of ageing is assessed by the change in peel strength to the pipe surface, in accordance with Annex B.4.

B.12.3.2 Apparatus

See B.12.1.2.

B.12.3.3 Preparation of the test samples

Prepare three samples for testing peel strength to the pipe surface in accordance with the method described in Clause B.4.1 for each ageing test.

Identify each sample as (a), (b) or (c).

B.12.3.4 Procedure

Precondition the test samples for 7 days at the ageing temperature before testing.

Age the test samples at *T*max ± 20 °C as follows:

a) Store sample (a) in a dark room at room temperature for 100 days;

All parties consent to this document being signed electronically - UP&C/JOR/INT/2021/3690

b) Store sample (b) for 70 days in an oven at the ageing temperature, followed by 30 days at room temperature in a dark room.
c) Store sample (c) for 100 days in an oven at the ageing temperature.

After the ageing period, test all test samples within 8 h for peel strength under identical conditions in accordance with Clause D.1 at the test temperature of 23 °C ± 2 °C.

B.12.3.5 Results

Calculate the arithmetic mean of the peel strength in accordance with Clause B.4.1.
Calculate the following ratios of the peel strengths:

$P100/P0$
$P100/P70$

Where

$P0$ is the peel strength to the pipe surface at 23 °C without heat ageing;
$P70$ is the peel strength to the pipe surface at 23 °C after heat ageing for 70 days;
$P100$ is the peel strength to the pipe surface at 23 °C after heat ageing for 100 days.

B.13 FLEXIBILITY TESTING

Samples shall be cold-cut from a coated pipe and shall be subjected to a bend test. For pipe diameters of 300 mm (12 in) and above, four strips (300 mm [12 in] long x 50 mm [2 in] wide) shall be cut in the longitudinal direction of the pipe. For pipe diameters less than 300 mm (12 in), four rings shall be cut with a width of 50 mm (2 in).

The samples shall be free from holidays when tested in accordance with (7.3). At 0 °C (32 °F) a 2 % strain, and at 20 °C (68 °F) a 3 % strain, shall be induced in the coating of the sample or otherwise agreed by the Company. Two tests shall be carried out at each temperature. The deflection loading rate during bend testing shall be 25 ± 2 mm/min (1 ± 0.08 in/min).

All parties consent to this document being signed electronically - UP&C/JOR/INT/2021/3690

Strip samples shall be bent by means of a mandrel, using either a 3-point bending or a cantilever arrangement. The mandrel sizes shall be selected according to the following formula equation (B.13.1):

$$D = \frac{t\,(1-s)}{s} \qquad \text{(B.13.1)}$$

Where:

D = mandrel diameter (mm)
t = specimen metal wall thickness (mm)
s = 2 % at 0 °C (32 °F)
3 % at 20 °C (68 °F)

The ring samples shall be squeezed in accordance with ASTM G70 to obtain a strain of 2% and 3% respectively. As a guide, the length of the reduced axis after squeezing shall be as equation (B.13.2):

$$d2 = \frac{d}{\left(\frac{s}{t} * d\right) + 1} \qquad \text{(B.13.2)}$$

Where:

d = the pipe diameter (mid-wall to mid-wall) before squeezing, mm
d2 = the length of the reduced axis (mid-wall to mid-wall) after squeezing, mm
t = the pipe wall thickness (mm)
s = 2 % at 0 °C
3 % at 20 °C

After bending, the pipe coating surface shall be examined for the presence of holidays in accordance with (5.3). The coating shall be deemed to have failed the test if any holiday is detected.

All parties consent to this document being signed electronically - UPTC/JOR/INT/2021/3690