ADNOC GAS
LONG TERM - EXECUTE STAGE
PROJECT 5.0 (P5)
EPCm FOR HABSHAN DBN
COMPANY PROJECT No. 30201-50150-LT-HE
WORK ORDER NO. 3000076501

Comments Resolution Sheet (CRS) - EPCm

COMPANY Trans. No.:	**ADNOCGP-WTRAN-024424**	**Received Date:**	**06-Feb-26**
COMPANY Doc. No.:	**30201_50150_LT_HE-H4-278-17-23-001**	**Revision:**	**B**
Document Title:	**UNIT 278 - HABSHAN 4FOUNDATION LAYOUT & DETAILS FOR IES-201FOUNDATION SECTION & RC DETAILS**	**Status Code:**	**Code 2**
ADNOC PM:	**Dr Azharuddin Mohammed**	**EPCm. CONTRACTOR PM:**	**Sriram PS**
ADNOC Reviewer:	**Mohamed Elsadani, Mr Kiranbhai Kuntmal, Mr Vinodhkumar Ranganathan**	**EPCm. CONTRACTOR Originator:**	**Surajit Das**

Review Codes: ☐ **Code-1: Rejected** ☑ **Code 2: Comments as Noted**
☐ **Code-3: No Comments** ☐ **Code 4: For Information Only**

REVISION A

No.	COMMENT SECTION/ CLAUSE / DRAWING REFERENCE	COMPANY Comment	COMPANY Reviewer	EPCm CONTRACTOR Response	Open/Closed	COMPANY Response (If Comments are still open / Not incorporated or if Eng Contractor Response Not Acceptable)	EPCm CONTRACTOR Response	Open/Closed	COMPANY Response (If Comments are still open / Not incorporated or if Eng Contractor Response Not Acceptable)	EPCm CONTRACTOR Response	Remarks
	[1] 01	1. Ensure to finalize the Architectural drawings and align with all the respective disciplines. Highly recommend to arrange a session/workshop to resolve the Hold list on Archi. drawings and agree on the building size, room size, building location and cable entry locations & levels before the next submission. 2. EPCM to provide the status of other disciplines critical deliverables and demonstrate the basis of issuing the Foundation drawings for construction. 3. Refer the comments in design report and update as required. 4. Any update required based on the Final plot plan shall be carried out. 5. Any update required based on the model review comments shall be carried out. 6. Any update required based on the Execute stage Geotech reports shall be carried out. 7. Any update required based on the CPY HSE approved QRA/FERA report shall be carried out. 8. Update the status of CP vendor. Ensure to align with CP vendor and provide the CP installation drawings to GCC1 to execute under the supervision of CP vendor. Expedite to conclude at the earliest. 9. Finalize the cable entries/exit and ensure the clash free and feasible proposal. 10. Clarify the Grading status.	Mr Vinodhkumar Ranganathan	1. Architectural drawing is in progress, shall be issued later. 2. The electrical earthing layout, electrical cable layout are in the final stage of preparation, however it is ensured that the same does not have any impact in foundation layout. 3. Noted and incorporated in the foundation drawing. 4. Final plot plan is not yet available. 5. Model review is in progress. 6. Noted and updated. 7. Noted. The design is finalized based on the earlier conservative input from HSE. Hence will not have any impact on foundation. 8. CP vendor is not finalised yet. 9. As discussed with electrical, Electrical drawing is under progress .and will be updated after receipt of electrical input. 10. Grading drawing preperation in under progress.	1. Open 2. Noted 3. Noted 4. open. 5. Open. 6. Noted. 7. Noted 8. Open 9. Open 10. Noted.		1. Architectural drawing is in progress, shall be issued later. 4. Final plot plan is not yet available. 5. Model review is in progress. 8. CP vendor is not finalised yet. 9. As discussed with electrical, Electrical drawing is under progress .and will be updated after receipt of electrical input.	Open	Open. Resolve at the Earliest and ensure that the issued Foundation layout and details not affected	1. All building grid dimensions and height is updated as per architectiral IFCH drawing. 4. Final plot plan is not yet available. 5. Model review is in progress. 8. CP vendor is not finalised yet. 9. Below grade pipe sleeves location is shown in plan as per Input.	
	[1] 02	1. Update to mention Concrete grade, clear cover, rebar grade in a tabular format. 2. Update to include the MTO. 3. Update to mention the GWT in terms of levels. 4. Update to mention that : a) All concrete works shall be carried out as per addendum to AGES-SP-01-001. b) All earthworks shall be carried out as per AGES-SP-01-005 5. Earthworks shall also be based on the Geotech. recommendations. Ensure the same with Execute stage reports	Mr Vinodhkumar Ranganathan	1. Noted and updated. 2. Noted and updated. 3. Noted and updated. 4. Noted and updated. 5. Noted and updated.	Noted and closed						
	[1] 04	??	Mr Vinodhkumar Ranganathan	Noted and updated in Typical column RC details in Sheet 4.	Noted and closed						
	[1] 02	Align with CP vendor and update the notes suitably to GCC1	Mr Vinodhkumar Ranganathan	As CP vendor is not finalized . So it is kept under hold list.	Noted and updated	Not in the Hold list. Ensure to include in the Hold list	Noted and Updated.	Noted and closed			
	[1] 03	Also provide the reference on where to see the complete details and execute	Mr Vinodhkumar Ranganathan	Noted and updated. Architectural drawing 30201-50150-LT-HE-H4-278-20-22-001 referred for complte details	Noted and closed.						
	[1] 02	At the intersections and change in direction of strip footing, clear rebar detailing shall be provided to GCC1 to execute. Update. Typical comment.	Mr Vinodhkumar Ranganathan	Noted and updated.							
	[1] 02	Avoid multiple column Grouping with the same size. Check and update by having common rebar details.	Mr Vinodhkumar Ranganathan	Noted and updated.							
	[1] 02	check whether center line reference should be w.r,t wall or column as per structural modelling . Justify with the basis	Mr Vinodhkumar Ranganathan	Reference/ Grid line has been shifted at column centre.	Noted.	Ensure the offset requirements in STAAD. To be reviewed in design r	Noted and will be updated in the design document.	Noted .			
	[1] 02	Expedite to clear the wall for construction minimum upto the Grade level at the earliest with all the openings and cut out. Update to provide the reference drawings	Mr Vinodhkumar Ranganathan	Noted and updated and wall opening is kept under hold list.	Noted.	This is must requirement to finalize the dowel rebars from foundation. Expedite to resolve the Hold at the earliest.	Noted and will be updated after receipt of wall opening input.Now it is mentioned I the hold list.				
	[1] 02	For this also, strip footing required ?? check and update	Mr Vinodhkumar Ranganathan	Notedand updated and the width is optimesed from 2000 mm to 1800mm.	Noted.						
	[1] 03	For strip foundation, Rebar plan layout and sections are mandatory showing the curtailments, lapping distance, locations etc. The shown rebar detail is very conservative. Update to provide the rebar details only as required with the suitable contingencies. With Wall from Footing, shown rebar design and details seems to be not okay.	Mr Vinodhkumar Ranganathan	Noted and updated.	Noted and closed						
	[1] 03	For Top rebar, provided seems to be very high. check and update	Mr Vinodhkumar Ranganathan	Noted and optimized.							
	[1] 04	Highly recommend to consider the spacing at 100mm within the footing	Mr Vinodhkumar Ranganathan	Noted and updated.							
	[1] 03	Identify in the Plan	Mr Vinodhkumar Ranganathan	Noted and updated.							
	[1] 04	Only 50% shall be lapped at one point and other 50% shall be staggered. Exact location of lapping and staggering shall be shown for GCC1 to execute. Recommend to show full detail to GCC1 instead of typical detail. Discuss with GCC1 and update as required.	Mr Vinodhkumar Ranganathan	Necessary note has been provided in the drawing.							
	[1] 04	optimize the grouping	Mr Vinodhkumar Ranganathan	Noted and updated.							
	[1] 03	Please refer the E08 type standard earthing installation from drawing 30201_50150_LT_HE-GG-000-16-21-001 for REINFORCEMENT CONCRETE STRUCTURE	Mr Kiranbhai Kuntmal	Noted and updated.							
	[1] 04	recommend to consider the rebar to shape	Mr Vinodhkumar Ranganathan	Detail retained as per issued drawings for other buildings.							
	[1] 03	Refer the comments on 30201_50150_LT_HE-H4-280-17-23-003 and update as require	Mr Vinodhkum Ranganathan	Noted and updaed as applicable.							
	[1] 03	Show earthing arrangement of steel reinforcement bars.	Mohamed Elsadani	For earthing lugs details refer drawing no 30201_50150_LT_HE-GG-000-16-21-001 And the earthing lugs location is under hold.							
	[1] 03	Side face rebars shall be considered with a spacing =< 300mm	Mr Vinodhkumar Ranganathan	Noted and updated.							
	[1] 02	The considered width seems to be more for IES building. Check and update	Mr Vinodhkumar Ranganathan	Noted and it is optimised from 3000 mm to 2700 mm.							
	[1] 03	Update to mention where to refer the grade slab details	Mr Vinodhkumar Ranganathan	Noted and updated with standard drawing of grade slab.							
	[1] 02	update to provide the rebar details at chamfer. Typical comment	Mr Vinodhkumar Ranganathan	Noted and already provided in sheet 4.							
	[1] 02	With intermediate column in place, column sizes considered seems to be high. Check and update as required	Mr Vinodhkumar Ranganathan	Retain column sizes to optimize the rebar requirement.	Noted and Closed.						

REVISION B

No.	COMMENT SECTION/ CLAUSE / DRAWING REFERENCE	COMPANY Comment	COMPANY Reviewer	EPCm CONTRACTOR Response	Open/Closed	COMPANY Response (If Comments are still open / Not incorporated or if Eng Contractor Response Not Acceptable)	EPCm CONTRACTOR Response	Open/Closed			Remarks
	[1] 02	Ensure that the sealant is sufficient to accommodate the relative movement between the segments. Attach the check in the CRS and later include in the design report.	Mr Vinodhkumar Ranganathan	Max relative displacement is coming 8 mm which is less than 0.35X 50=17.5 mm .	Noted and closed						
	[1] 03	Include the detail number and sheet number	Mr Vinodhkumar Ranganathan	Noted and updated.							
	[1] 03	T12	Mr Vinodhkumar Ranganathan	Noted and updated.							
	[1] 03	External wall is concrete. update	Mr Vinodhkumar Ranganathan	Noted and updated.							
	[1] 03	T10 @ 100C/C	Mr Vinodhkumar Ranganathan	Noted and updated.							
	[1] 03	Maintain clear cover	Mr Vinodhkumar Ranganathan	Noted and updated.							
	[1] 03	Splicing locations shall be shown in Engineering drawings to GCC1. Update	Mr Vinodhkumar Ranganathan	Noted and updated.							
	[1] 04	T16	Mr Vinodhkumar Ranganathan	Noted and updated as 20 dia bar at bottom.							
	[1] 04	Shown is not correct. may be scaling issue. check and update	Mr Vinodhkumar Ranganathan	Noted and updated.							
	[1] 04	Horizontal rebars shall be in the external	Mr Vinodhkumar Ranganathan	Noted and updated.							
	[1] 04	Blast wall design for IES-201 to be concluded before the IFC of this drawing. Discuss in advance to avoid delay and reworks.	Mr Vinodhkumar Ranganathan	noted and updated as 350 mm thik wall.							
	[1] 04	Ensure bottom rebar splicing is always at centre. Typical comment	Mr Vinodhkumar Ranganathan	Noted and updated.							
	[1] 04	T16 ? Check the correctness and update as required	Mr Vinodhkumar Ranganathan	Noted and updated as 20 dia bar at bottom.							
48	[1] 04	T20? For combined Top long rebar generally higher. check and update	Mr Vinodhkumar Ranganathan	Noted and updated as 20 dia bar at bottom.							

REVISION 0

No.	COMMENT SECTION/ CLAUSE / DRAWING REFERENCE	COMPANY Comment	COMPANY Reviewer	EPCm CONTRACTOR Response	Open/Closed	COMPANY Response (If Comments are still open / Not incorporated or if Eng Contractor Response Not Acceptable)	EPCm CONTRACTOR Response	Open/Closed			
50		Clear the HOLD prior to submitting Rev.0. With all these HOLD points, construction/ execution cannot proceed. Resolve and remove all the HOLDs urgently and issue next revision.	Mr Abhishek Srivastava	Noted and all hold released.							

No.	COMMENT SECTION/ CLAUSE / DRAWING REFERENCE	COMPANY Comment	COMPANY Reviewer	EPCm CONTRACTOR Response	Open/Closed	COMPANY Response (If Comments are still open / Not incorporated or if Eng Contractor Response Not Acceptable)	EPCm CONTRACTOR Response	Open/Closed	COMPANY Response (If Comments are still open / Not incorporated or if Eng Contractor Response Not Acceptable)	EPCm CONTRACTOR Response	Remarks
51		considered is not correct. Staggering splices shall not overlap. Discuss before the next submission	Mr Vinodhkumar Ranganathan	Noted and updated.							

DRAWING NO.	DRAWING TITLE	SHEET	SHEET TITLE
30201_50150_LT_HE-H4-278-17-23-001	UNIT 278 – HABSHAN 4 FOUNDATION LAYOUT & DETAILS FOR 278-IES-201 (1)	01	DRAWING INDEX
		02	BUILDING FOUNDATION LAYOUT
		03	FOUNDATION SECTION & COLUMN RC DETAILS
		04	FOUNDATION RC DETAILS

SCALE 1:10
0 0.2 0.4 0.6 0.8 1.0m

REV.	DATE	DESCRIPTION	DRAWN	CHKD	APPRD
1	27-FEB-2026	RE-ISSUED FOR CONSTRUCTION (IFC)	RRR	SD/TKK	W/MS
0	06-FEB-2026	ISSUED FOR CONSTRUCTION (IFC)	SUT	SD/TKK	W/MS
B	05-FEB-2026	ISSUED FOR APPROVAL (IFA)	VA	SD/VB	W/MS
A	22-JAN-2026	ISSUED FOR COMPANY REVIEW (ICR)	VA	SD/VB	W/MS

SCALE:	DRAWN:	CHKD:	APPRD:
1:10	ASHOK	SURAJIT/BALAJI	VISWANATH/SOFI

أدنوك للغاز
ADNOC Gas

EPCm CONTRACTOR: wood.

EPCm CONTRACTOR: AMEC INTERNATIONAL LTD.

PROJECT TITLE
PROJECT 5.0 (P5)
LONG TERM - EXECUTE STAGE
EPCm FOR HABSHAN DBN

DRAWING TITLE
UNIT 278 – HABSHAN 4 (1)
FOUNDATION LAYOUT & DETAILS FOR 278-IES-201
DRAWING INDEX

UNIT: 213 | PLANT: H4
CONTR. PROJ. No. 3000076501 | CONT. DWG. No.: XXXXXXX
ADNOC GAS CONTRACT No. 3000076501

ADNOC GAS PROJ. No.	ADNOC GAS DWG. No.	SHEET	REV.
30201_50150_LT_HE	30201_50150_LT_HE-H4-278-17-23-001	01 OF 04	1

SHEET SIZE : A0

NOTICE: THIS DRAWING AND THE INFORMATION IT CONTAINS IS THE SOLE PROPERTY OF ADNOC GAS
IT SHALL NOT BE REPRODUCED OR LENT WITHOUT THE AGREEMENT OF THE OWNER

30201_50150_LT_HE-H4-278-17-23-001_1.dwg

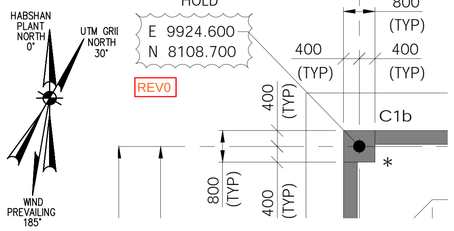

30201_50150_LT_HE-H4-278-17-23-001-IES201

Rev1

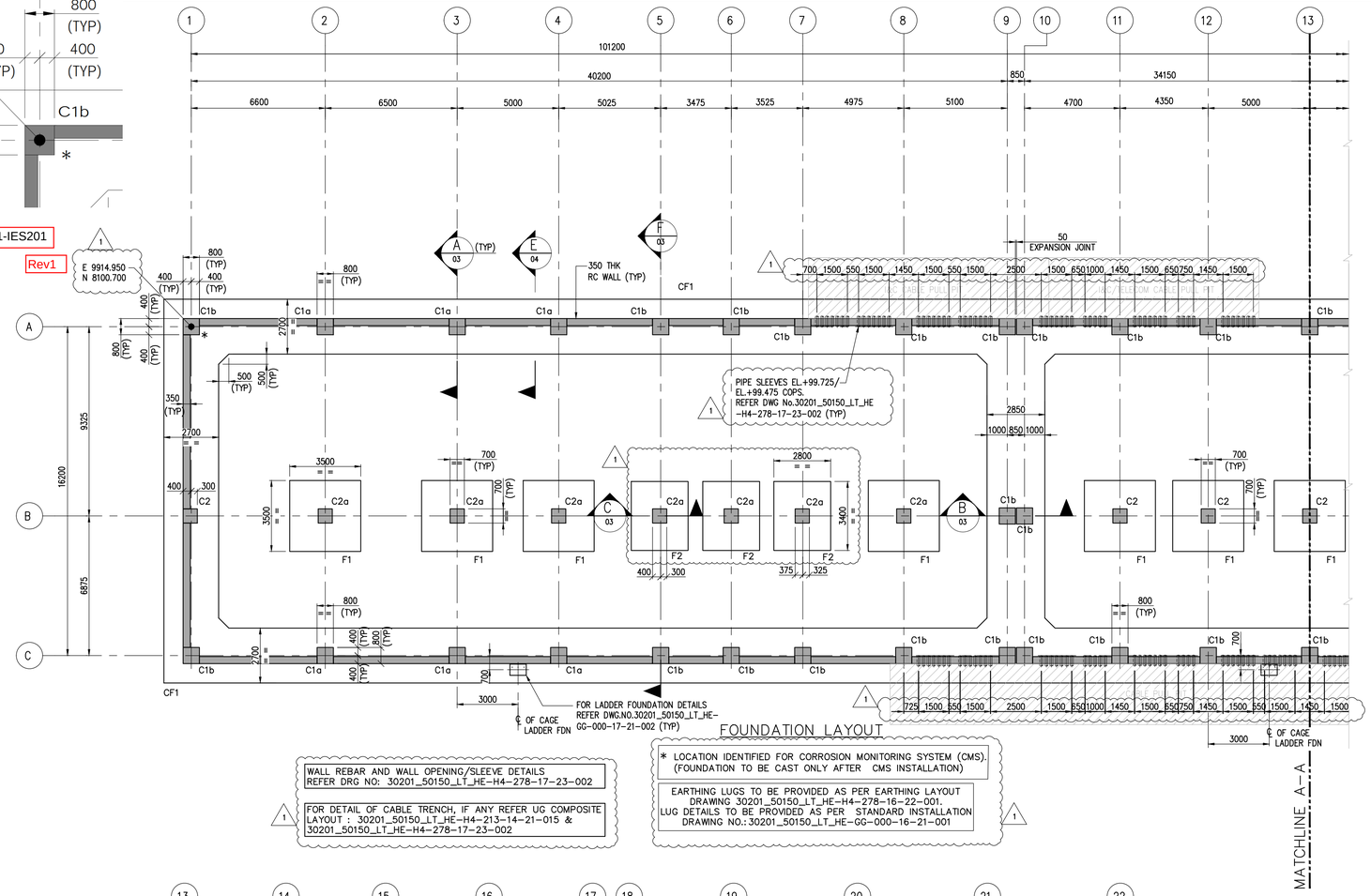

FOUNDATION LAYOUT

WALL REBAR AND WALL OPENING/SLEEVE DETAILS REFER DRG NO: 30201_50150_LT_HE-H4-278-17-23-002

FOR DETAIL OF CABLE TRENCH, IF ANY REFER UG COMPOSITE LAYOUT : 30201_50150_LT_HE-H4-213-14-21-015 & 30201_50150_LT_HE-H4-278-17-23-002

* LOCATION IDENTIFIED FOR CORROSION MONITORING SYSTEM (CMS). (FOUNDATION TO BE CAST ONLY AFTER CMS INSTALLATION)

EARTHING LUGS TO BE PROVIDED AS PER EARTHING LAYOUT DRAWING 30201_50150_LT_HE-H4-278-16-22-001. LUG DETAILS TO BE PROVIDED AS PER STANDARD INSTALLATION DRAWING NO.:30201_50150_LT_HE-GG-000-16-21-001

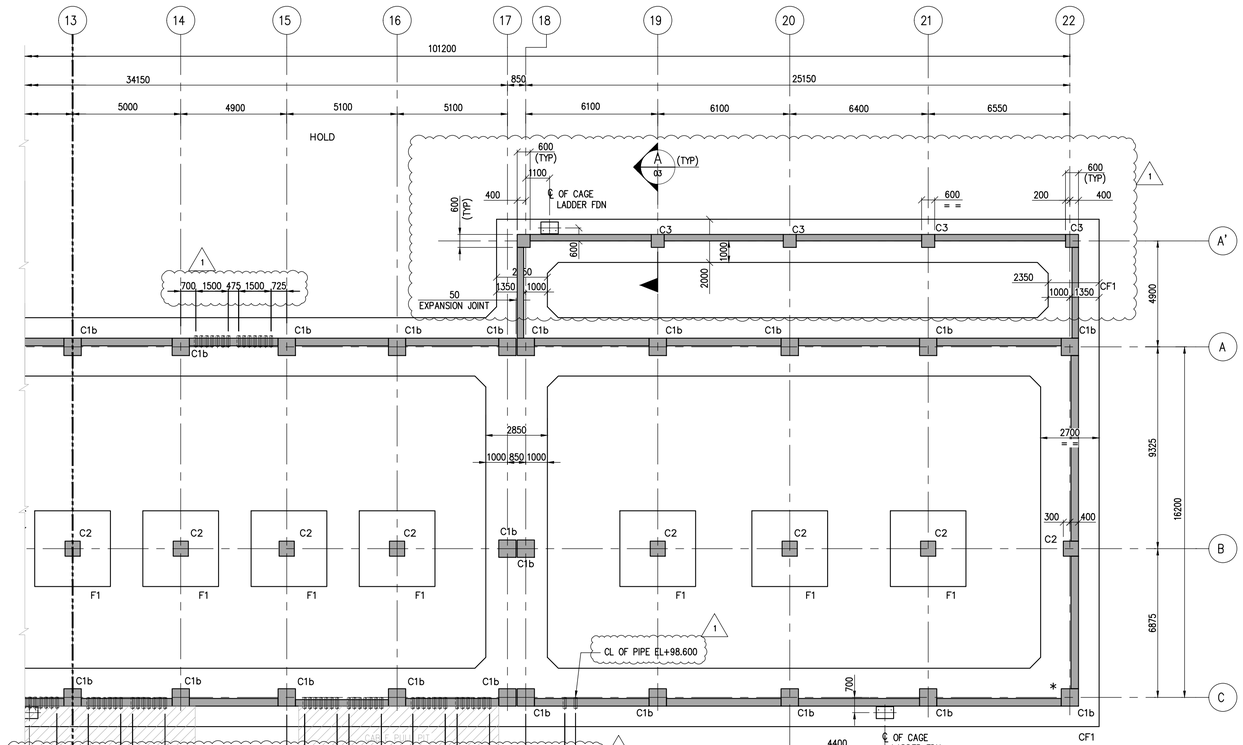

FOUNDATION DESIGN ARE CARRIED OUT WITH 170kN/M² NET SBC AT 2.5m DEPTH AS PER EXECUTION STAGE GEOTECHNICAL REPORT No RPT-30201_50150_LT_HE-GG-999-14-00-222.

FOUNDATION CONCRETE = 768.00 CUM.

BLINDING CONCRETE = 52.5 CUM.

NOTE : ALL FOUNDATION QUANTITIES INCLUDED. FOR ALL WALL AND COLUMN QUANTITIES SHALL BE REFEREED TO RESPECTIVE DRAWINGS.

LEGEND

℄	CENTERLINE
TYP	TYPICAL
HPP	HIGH POINT OF PAVING
FGL	FINISHED GRADE LEVEL
THK	THICKNESS
TOGR	TOP OF GRAVEL
FDN	FOUNDATION
COL/C1	COLUMN
BOF	BOTTOM OF FOUNDATION
TOC	TOP OF CONCRETE
COPS	CENTER OF PIPE SLEEVES

MATERIAL OF CONSTRUCTION

PARTICULARS	TYPE
BLINDING CONCRETE	fc = 20 MPa 28 DAY CUBE STRENGTH
	fc = 40 MPa 28 DAY CUBE STRENGTH
REINFORCEMENT	fy = 420 N/MM2 (MINIMUM YEILD STRENGTH 500 MPA - BS44449)

CLEAR COVER TO REINFORCEMENT SHALL BE AS BELOW:

RCC TYPE	TOP	BOTTOM	SIDE
FOUNDATION / COLUMN BELOW GRADE	75	75	75
GRADE BEAM	75	75	75
COLUMN ABOVE GRADE	50	50	50

NOTES

1. ALL DIMENSIONS ARE IN MILLIMETERS UNLESS NOTED OTHERWISE.
2. ALL COORDINATES AND ELEVATIONS ARE IN METERS UNLESS NOTED OTHERWISE.
3. THE COORDINATES MENTIONED ARE IN PLANT COORDINATES AND ELEVATIONS MENTIONED ARE IN JEBEL DHANNA CHART DATUM (JDCD)
4. FGL.EL.100.000 CORRESPONDS TO 81.000 ELEVATION BASED ON JEBEL DHANNA CHART DATUM (JDCD) AND 82.010 ELEVATION BASED ON NEW ABU DHABI DATUM (NADD).
5. PLANT COORDINATES E 9431.910, N 7903.650 EQUAL TO UTM COORDINATES E 769200.960, N 2637528.035.
6. FOR GENERAL NOTES, ABBREVIATIONS AND SYMBOLS – CONCRETE WORKS REFER STANDARD DRAWING NO. 30201_50150_LT_HE-GG-000-17-11-001.
7. FOR DETAILS OF PROTECTION TO CONCRETE FOUNDATIONS AND PEDESTALS REFER STANDARD DRAWING 30201_50150_LT_HE-GG-000-17-31-002.
8. EPCM CONSTRUCTION CONTRACTOR SHALL ENSURE THAT EXCAVATION & EXECUTION SHALL BE CARRIED OUT DURING NORMAL WIND CONDITIONS ONLY.
9. GWT ELEVATION AS PER EXECUTE STAGE SOIL REPORT IS 72 210 (CONSIDERING 1M SEASONAL VARIATION) AS PER JDCD LEVEL.
10. ALL CONCRETE WORKS SHALL BE CARRIED OUT AS PER ADDENDUM TO AGES-SP-01-001.
11. ALL EARTHWORKS SHALL BE CARRIED OUT AS PER AGES-SP-01-005.
12. EARTHWORKS SHALL ALSO BE BASED ON THE GEOTECH. RECOMMENDATIONS. REFER DOCUMENT NO RPT-30201_50150_LT_HE-GG-999-14-00-222.
13. THIS FOUNDATION IS CONSIDERED TO BE CRITICAL FOUNDATION INLINE WITH SOW-30201_50150_LT_HE-GG-000-63-22-001 AND CORROSION MONITORING SYSTEM SHALL BE PROVIDED AS PER AGES STANDARD DRAWING AGES-STD-01-108. REBAR ELECTRICAL CONTINUITY SHALL BE CHECKED AND ENSURED BEFORE CONCRETE POURING.
14. EPCM CONSTRUCTION CONTRACTOR SHALL ENSURE THAT EXCAVATION & EXECUTION SHALL BE CARRIED OUT DURING NORMAL WIND CONDITIONS ONLY.
15. CONTRACTOR SHALL PROVIDE ADEQUATE DEWATERING SYSTEMS TO KEEP THE FOUNDATION EXCAVATION DRY AND STABLE AT ALL TIMES DURING CONSTRUCTION.

REFERENCE DRAWINGS

30201_50150_LT_HE-H4-213-13-60-001	UNIT PLOT PLAN HABSHAN-4 (UNIT-213)
30201_50150_LT_HE-H4-278-20-22-001	UNIT 213 – HABSHAN 4 ARCHITECTURAL LAYOUT AND DETAILS IES BUILDING IES-201
30201_50150_LT_HE-GG-000-17-11-002	TYPICAL CONCRETE GA AND REINFORCEMENT DETAILS
30201_50150_LT_HE-H4-213-14-21-015	HABSHAN COMPLEX UG COMPOSITE LAYOUT FOR UNIT 213
30201_50150_LT_HE-H4-27817-23-002	STRUCTURAL CONCRETE LAYOUT AND DETAILS FOR IES-201
30201_50150_LT_HE-H4-278-15-41-001	INSTRUMENT EQUIPMENT SHELTER LAYOUT IES-201 (UNIT-278)
DC-30201_50150_LT_HE-H4-278-17-22-001	STRUCTURAL CONCRETE DESIGN FOR IES#201
30201_50150_LT_HE-GG-000-16-21-001	TYPICAL INSTALLATION DETAILS (EARTHING & LIGHTNING SYSTEM)
30201_50150_LT_HE-GG-000-63-44-001	TYPICAL CMS INSTALLATION DETAILS FOR CRITICAL AND NON-CRITICAL STRUCTURES
30201_50150_LT_HE-H4-278-16-22-001	UNIT-278 – IES-201 EARTHING & LIGHTNING PROTECTION LAYOUT
30201_50150_LT_HE-H4-278-34-00-024	HVAC DUCT LAYOUT & SECTIONS IES BUILDING (IES-201)
30201_50150_LT_HE-H4-278-34-00-016	HVAC CHILLED WATER LAYOUT-IES BUILDING (IES-201)

KEY PLAN

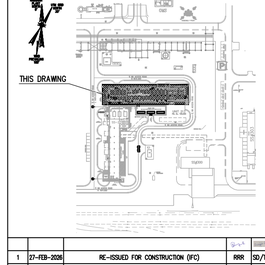

REV	DATE	DESCRIPTION	DRAWN	CHKD	APPRD
1	27-FEB-2026	RE-ISSUED FOR CONSTRUCTION (IFC)	KRR	SD/TKK	W/MS
0	06-FEB-2026	ISSUED FOR CONSTRUCTION (IFC)	SUT	SD/TKK	W/MS
B	05-FEB-2026	ISSUED FOR APPROVAL (IFA)	VA	SD/MB	W/MS
A	23-JAN-2026	ISSUED FOR COMPANY REVIEW (IOR)	VA	SD/MB	W/MS

SCALE: 1:100 | DRAWN: ASHOK | CHKD: SURAJIT/BALAJI | APPRD: VISWANATH/SOFI

ADNOC Gas

EPCm CONTRACTOR: wood.

EPCm CONTRACTOR: AMEC INTERNATIONAL LTD.

PROJECT TITLE: PROJECT 5.0 (P5) LONG TERM - EXECUTE STAGE EPCm FOR HABSHAN DBN

DRAWING TITLE: UNIT 278 – HABSHAN 4 FOUNDATION LAYOUT & DETAILS FOR 278-IES-201 BUILDING FOUNDATION LAYOUT

UNIT: 213 | PLANT: H4

CONTR. PROJ. No. 3000076501 | CONT. DWG. No.: XXXXXX

ADNOC GAS CONTRACT No. 3000076501

ADNOC GAS PROJ. No.	ADNOC GAS DWG. No.	SHEET	REV.
30201_50150_LT_HE	30201_50150_LT_HE-H4-278-17-23-001	02 OF 04	1

SCALE 1:100 0 2.5 5.0 7.5 10m

NOTICE: THIS DRAWING AND THE INFORMATION IT CONTAINS IS THE SOLE PROPERTY OF ADNOC GAS IT SHALL NOT BE REPRODUCED OR LENT WITHOUT THE AGREEMENT OF THE OWNER

SOURCE: 30201_50150_LT_HE-H4-278-17-23-001_1.dwg

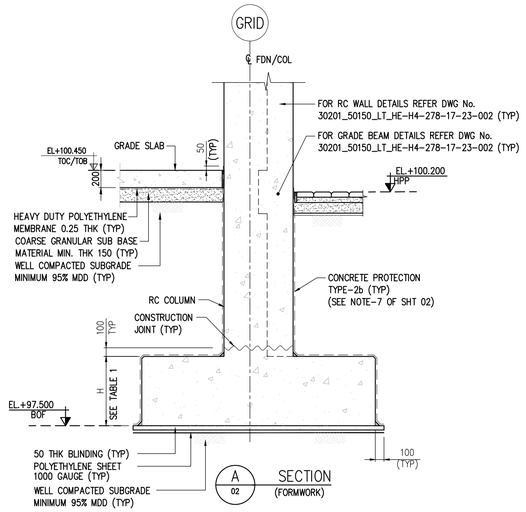

A 02 SECTION (FORMWORK)

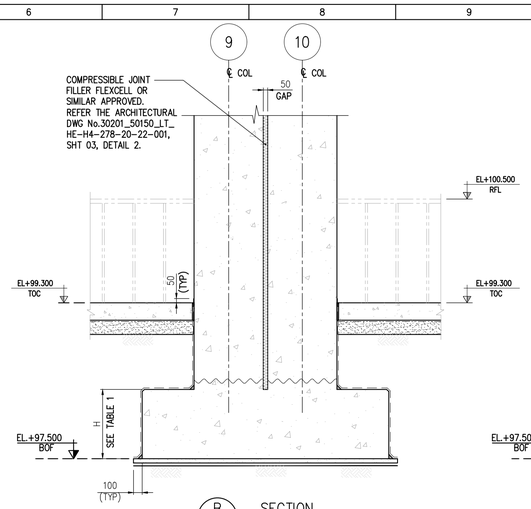

B 02 SECTION (FORMWORK)

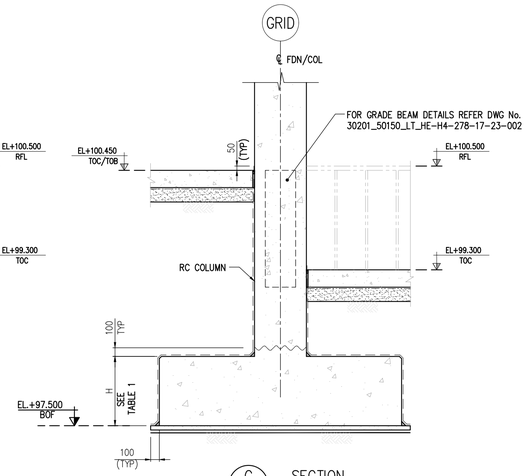

C 02 SECTION (FORMWORK)

NOTES

1. ALL DIMENSIONS ARE IN MILLIMETERS UNLESS NOTED OTHERWISE.
2. ALL COORDINATES AND ELEVATIONS ARE IN METERS UNLESS NOTED OTHERWISE.
3. FOR ALL OTHER NOTES , KEY PLAN, REFERENCE DRAWINGS, REFER DWG NO. 30201_50150_LT_HE-H4-278-17-23-001 SHT 02.
4. DEVELOPMENT LENGTH LD SHALL BE MINIMUM 50xBAR DIA SPLICE LAPPING LENGTH SHALL BE 1.3 x LD. THE CENTER TO CENTER OF SPLICE STAGGERING SHALL NOT BE LESS THAN 1.3 LD.
5. TYPICAL SPLICE LOCATION PROVIDED BASED ON THAT SUITABLE SPLICE LOCATION SHALL BE ARRIVED DURING BAR BENDING SCHEDULE WHEREVER NOT SHOWN IN THE REINFORCEMENT PLAN. 50% OF REBAR SHALL BE SPLICED AT ONE LOCATION.

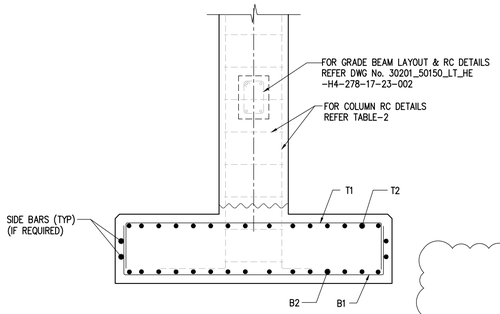

TYPICAL REINFORCEMENT DETAILS FOR FOOTING TYPES CF1, F1, F2

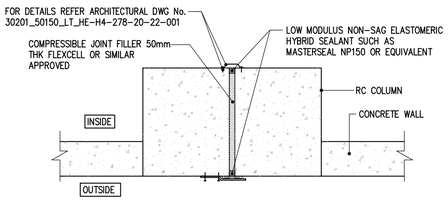

TYP EXPANSION JOINT AT COLUMNS

FOR DETAILS REFER DWG No. 30201_50150_LT_HE-H4-278-20-22-001

TABLE-1

FOUNDATION MKD	QUANTITY	FOOTING DIMENSIONS		REINFORCEMENT				SIDE BARS	REMARKS
		L x B	H	AT TOP		AT BOTTOM			
				ALONG LENGTH (T1)	ALONG BREADTH (T2)	ALONG LENGTH (B1)	ALONG BREADTH (B2)		
CF1	1	(SEE LAYOUT)	800	(SEE PLAN)				2-T12	
F1	13	3500 x 3500	800	T16-125	T16-125	T20-125	T20-125	2-T12	1
F2	3	2800 x 3400	800	T16-125	T16-125	T20-125	T20-125	2-T12	

1

- FOR FOUNDATION ORIENTATION REFER SHT 02

PLEASE REFER THE E08 TYPE STANDARD EARTHING INSTALLATION FROM DRAWING 30201_50150_LT_HE-GG-000-16-21-001 FOR REINFORCEMENT CONCRETE STRUCTURE

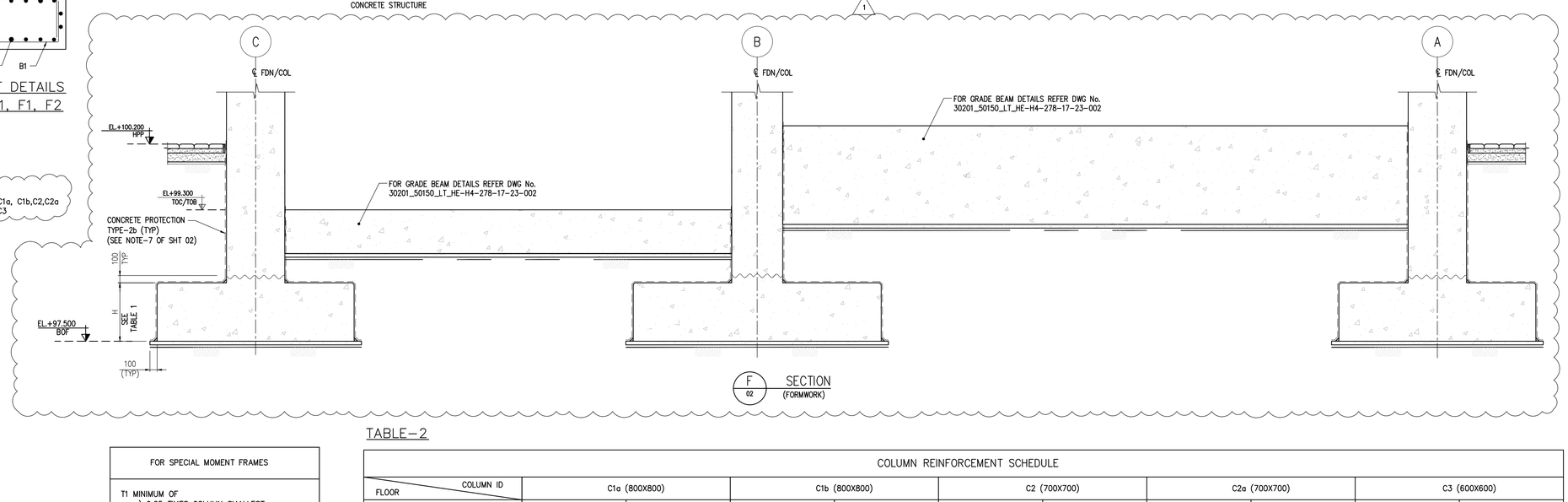

F 02 SECTION (FORMWORK)

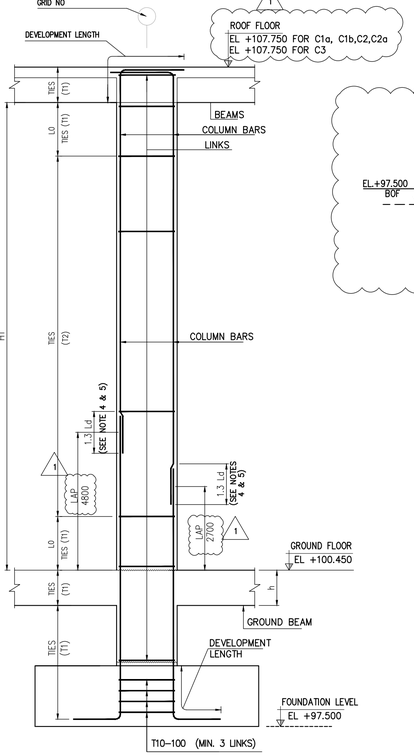

TYPICAL COLUMN RC DETAIL

(SCALE: NTS)

FOR SPECIAL MOMENT FRAMES
T1 MINIMUM OF a) 0.25 TIMES COLUMN SMALLEST CROSS-SECTIONAL DIMENSION b) FOR GRADE 420, 6 TIMES SMALLEST LONGITUDINAL REINFORCEMENT BAR DIAMETER FOR GRADE 550, 5 TIMES SMALLEST LONGITUDINAL REINFORCEMENT BAR DIAMETER c) 150mm d) AS CALCULATED PER EQ 18.7.5.3 OF ACI 318-19 AND SHALL NOT EXCEED 150mm AND NEED NOT BE TAKEN LESS THAN 100mm
T2 <= a) 150mm. b) 6 TIMES SMALLEST LONGITUDINAL REINFORCEMENT BAR DIAMETER FOR GRADE 420 C) 5 TIMES SMALLEST LONGITUDINAL REINFORCEMENT BAR DIAMETER FOR GRADE 550 AT COLUMN SPLICE LOCATION, T2 = MIN (d/4, 100mm), WHERE d IS COLUMN LEAST DIMENSION
LO :GREATER OF THE FOLLOWING a) MAX COLUMN DIMENSION b) 1/6 OF CLEAR HEIGHT OF COLUMN c) 450mm

h – OVERALL DEPTH OF BEAM
H1, H2 –CLEAR HEIGHT OF COLUMN

TABLE-2

COLUMN REINFORCEMENT SCHEDULE

FLOOR \ COLUMN ID	C1a (800X800)	C1b (800X800)	C2 (700X700)	C2a (700X700)	C3 (600X600)
	T1: T10-100 T2: T10-100	T1: T10-100 T2: T10-100	T1: T10-100 T2: T10-100	T1: T12-100 T2: T12-100	T1: T10-100 T2: T10-100
GRADE BEAM TO ROOF BEAM (EL +107.750) GRADE BEAM TO +104.200 FOR COLUMN C3	T1/T2 T1/T2 24-T32	T1/T2 T1/T2 5-T25-BF 7-T25-BF	T1/T2 T1/T2 4-T20-BF 6-T20-BF	T1/T2 T1/T2 4-T32-BF 6-T32-BF	20-T20 T1/T2 T1/T2
FOUNDATION TO GRADE BEAM (EL +97.500 TO +100.450 &/+99.300) 1	T1/T2 T1/T2 24-T32	T1/T2 T1/T2 5-T25-BF 7-T25-BF	T1/T2 T1/T2 4-T20-BF 6-T20-BF	T1/T2 T1/T2 4-T32-BF 6-T32-BF	20-T20 T1/T2 T1/T2

SCALE 1:25 — 0 0.5 1.0 1.5 2.0 2.5m

REV.	DATE	DESCRIPTION	DRAWN	CHKD	APPRD
1	27-FEB-2026	RE-ISSUED FOR CONSTRUCTION (IFC)	RRR	SD/TKK	VK/MS
0	06-FEB-2026	ISSUED FOR CONSTRUCTION (IFC)	SUT	SD/TKK	VK/MS
B	05-FEB-2026	ISSUED FOR APPROVAL (IFA)	VA	SD/MB	VK/MS
A	23-JAN-2026	ISSUED FOR COMPANY REVIEW (IOR)	VA	SD/MB	VK/MS

SCALE: 1:25 | DRAWN: ASHOK | CHKD: SURAJIT/BALAJI | APPRD: VISWANATH/SOFI

ADNOC Gas

EPCm CONTRACTOR: wood. | EPCm CONTRACTOR: AMEC INTERNATIONAL LTD.

PROJECT TITLE: PROJECT 5.0 (P5) LONG TERM - EXECUTE STAGE EPCm FOR HABSHAN DBN

DRAWING TITLE: UNIT 278 – HABSHAN 4 — FOUNDATION LAYOUT & DETAILS FOR 278-IES-201 FOUNDATION SECTION & COLUMN RC DETAILS

UNIT: 213 | PLANT: H4
CONTR. PROJ. No. 3000076501 | CONT. DWG. No.: XXXXXX
ADNOC GAS CONTRACT No. 3000076501
ADNOC GAS PROJ. No. 30201_50150_LT_HE | ADNOC GAS DWG. No. 30201_50150_LT_HE-H4-278-17-23-001 | SHEET 03 OF 04 | REV. 1

SIZE : A0

NOTICE: THIS DRAWING AND THE INFORMATION IT CONTAINS IS THE SOLE PROPERTY OF ADNOC GAS IT SHALL NOT BE REPRODUCED OR LENT WITHOUT THE AGREEMENT OF THE OWNER

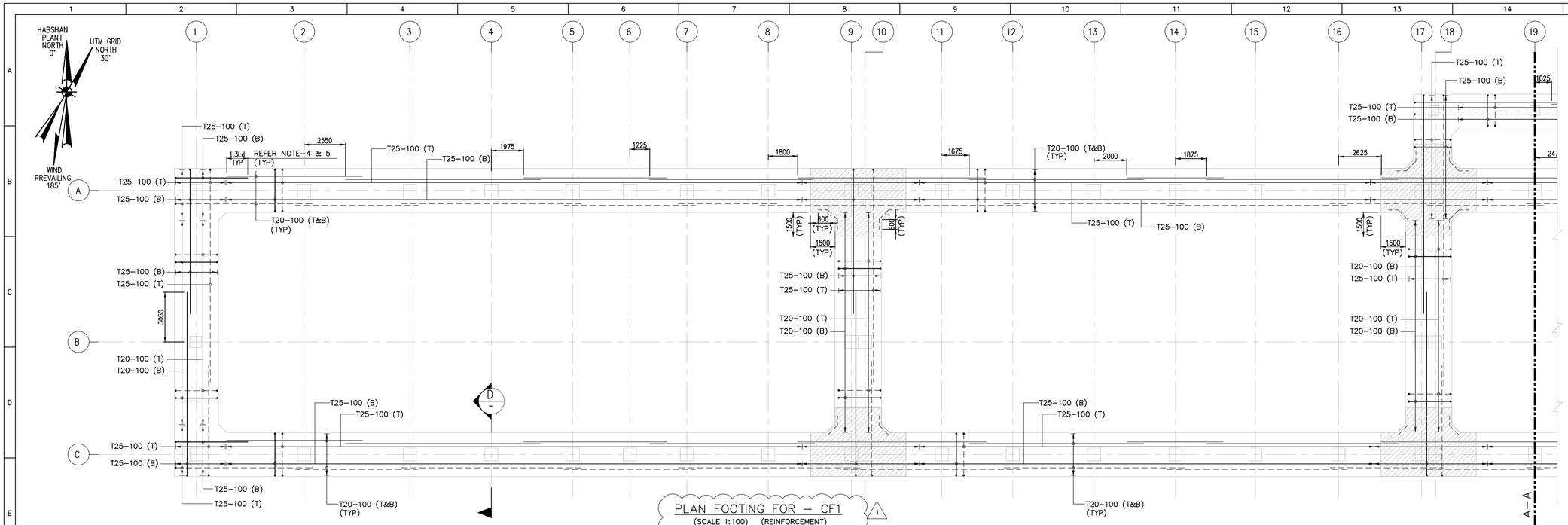

PLAN FOOTING FOR – CF1
(SCALE 1:100) (REINFORCEMENT)

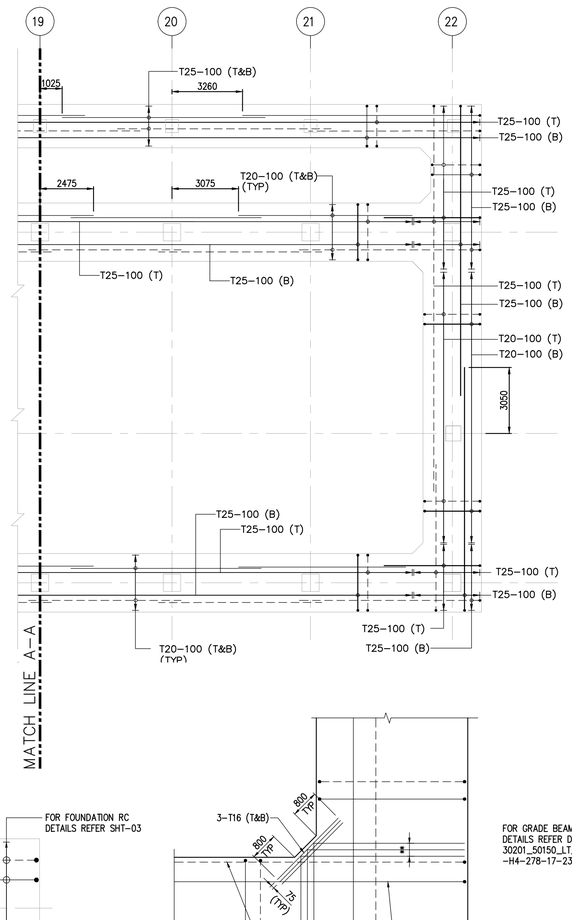

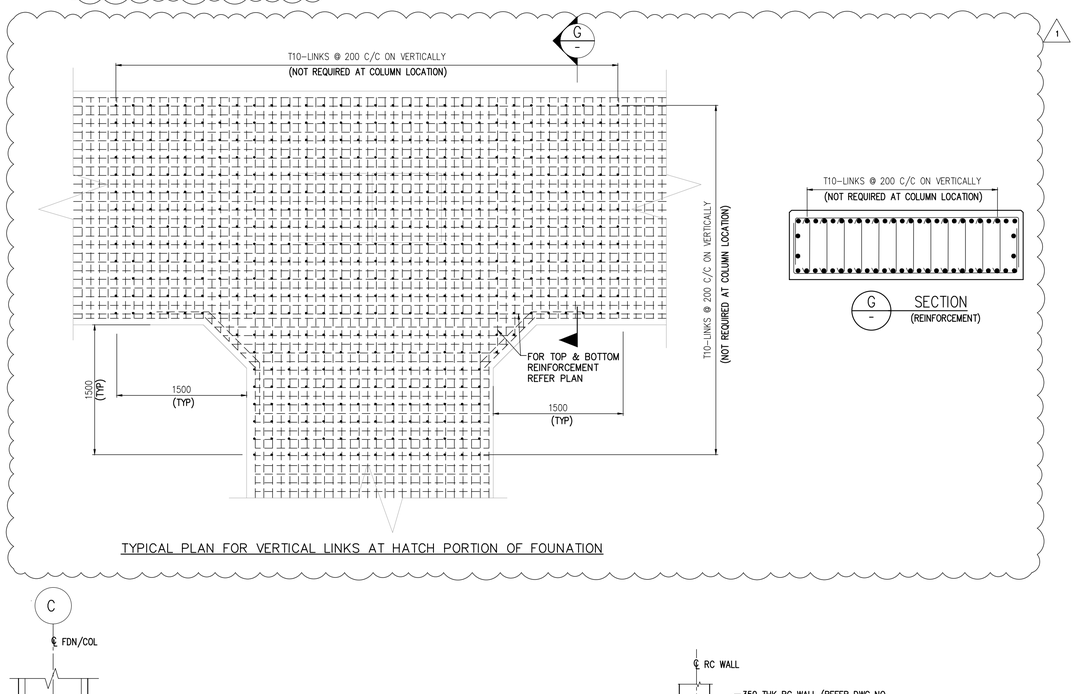

TYPICAL PLAN FOR VERTICAL LINKS AT HATCH PORTION OF FOUNATION

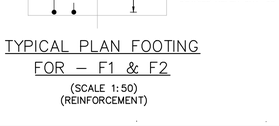

TYPICAL PLAN FOOTING FOR – F1 & F2
(SCALE 1:50)
(REINFORCEMENT)

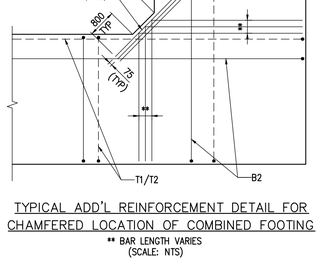

TYPICAL ADD'L REINFORCEMENT DETAIL FOR CHAMFERED LOCATION OF COMBINED FOOTING
** BAR LENGTH VARIES
(SCALE: NTS)

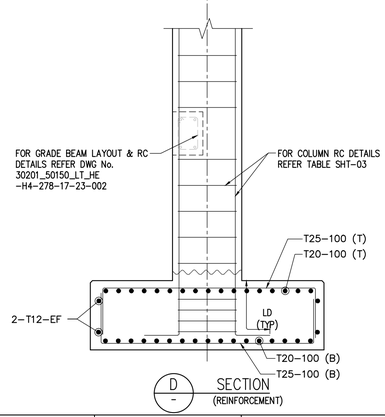

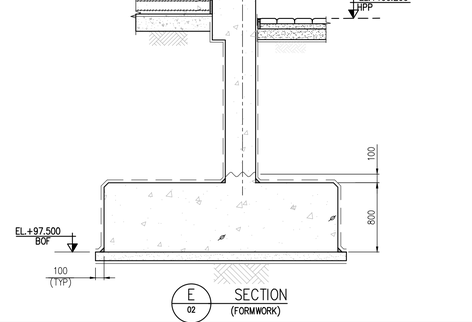

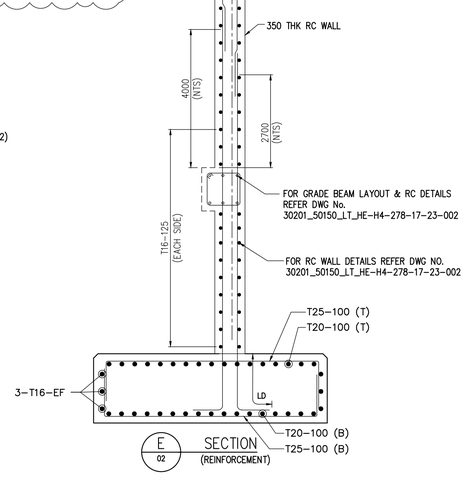

NOTES

1. ALL DIMENSIONS ARE IN MILLIMETERS UNLESS NOTED OTHERWISE.
2. ALL COORDINATES AND ELEVATIONS ARE IN METERS UNLESS NOTED OTHERWISE.
3. FOR ALL OTHER NOTES , KEY PLAN, REFERENCE DRAWINGS, REFER DWG NO. 30201_50150_LT_HE–H4–278–17–23–001 SHT 02.
4. DEVELOPMENT LENGTH LD SHALL BE MINIMUM 50xBAR DIA SPLICE LAPPING LENGTH SHALL BE 1.3 x LD. THE CENTER TO CENTER OF SPLICE STAGGERING SHALL NOT BE LESS THAN 1.3 LD.
5. TYPICAL SPLICE LOCATION PROVIDED BASED ON THAT SUITABLE SPLICE LOCATION SHALL BE ARRIVED DURING BAR BENDING SCHEDULE WHEREVER NOT SHOWN IN THE REINFORCEMENT PLAN. 50% OF REBAR SHALL BE SPLICED AT ONE LOCATION.

LEGEND

- TOP BAR
- BOTTOM BAR
- LD – DEVELOPMENT LENGTH

SCALE 1:25 (0 0.5 1.0 1.5 2.0 2.5m)

REV	DATE	DESCRIPTION	DRAWN	CHKD	APPRD
1	27–FEB–2026	RE–ISSUED FOR CONSTRUCTION (IFC)	RRR	SD/TKK	VV/MS
0	06–FEB–2026	ISSUED FOR CONSTRUCTION (IFC)	SUT	SD/TKK	VV/MS
B	05–FEB–2026	ISSUED FOR APPROVAL (IFA)	VA	SD/HB	VV/MS
A	22–JAN–2026	ISSUED FOR COMPANY REVIEW (ICR)	VA	SD/HB	VV/MS

SCALE: AS SHOWN | DRAWN: ASHOK | CHKD: SURAJIT/BALAJI | APPRD: VISWANATH/SOFI

ADNOC Gas

EPCm CONTRACTOR: wood. | EPCm CONTRACTOR: AMEC INTERNATIONAL LTD.

PROJECT TITLE: PROJECT 5.0 (P5) LONG TERM - EXECUTE STAGE EPCm FOR HABSHAN DBN

DRAWING TITLE: UNIT 278 – HABSHAN 4 FOUNDATION LAYOUT & DETAILS FOR 278–IES–201 FOUNDATION RC DETAILS

UNIT: 213 | PLANT: H4
CONTR. PROJ. No. 3000076501 | CONT. DWG. No.: XXXXXX
ADNOC GAS CONTRACT No. 3000076501
ADNOC GAS PROJ. No. 30201_50150_LT_HE | ADNOC GAS DWG. No. 30201_50150_LT_HE–H4–278–17–23–001 | SHEET 04 OF 04 | REV. 1

SHEET SIZE : A0

NOTICE: THIS DRAWING AND THE INFORMATION IT CONTAINS IS THE SOLE PROPERTY OF ADNOC GAS IT SHALL NOT BE REPRODUCED OR LENT WITHOUT THE AGREEMENT OF THE OWNER