ADNOC GAS OPERATIONS & MARKETING LLC

ADDENDUM TO AGES-SP-07-007 WELDING AND NON-DESTRUCTIVE EXAMINATION (NDE)

EPCm CONTRACT NO.: 3000076501

ADNOC GAS PROJECT NO.: 30201-50150-LT-HE

LONG TERM - EXECUTE STAGE

PROJECT 5.0 (P5)

EPCm FOR HABSHAN DBN

A	ISSUED FOR REVIEW (IFR)	23-MAY-25	Dana M	Shashank S / Hashir N	Shailesh K
REV.	DESCRIPTION	DATE	PREPARED	CHECKED	APPROVED
			wood.		

TABLE OF CONTENTS

1.0 INTRODUCTION 4
1.1 BACKGROUND 4
1.2 LONG TERM EPCM PROJECT OBJECTIVES 4
1.3 SCOPE BATTERY LIMIT 5
2.0 PURPOSE OF THIS DOCUMENT 5
3.0 DEFINITIONS 5
3.1 GENERAL DEFINITIONS 5
3.2 TECHNICAL DEFINITIONS 6
4.0 AMENDMENTS 8
4.1 AMENDMENTS TO SECTION 1 – GENERAL 8
4.2 AMENDMENTS TO SECTION A – GENERAL 11
4.3 AMENDMENTS TO SECTION B 16
4.4 AMENDMENTS TO SECTION B (PART 1) – WELDING AND NDE – GENERAL 16
4.5 AMENDMENTS TO SECTION B (PART 2) – WELDING AND NDE OF PIPING SYSTEMS ... 20
4.6 AMENDMENTS TO SECTION B (PART 4) – WELDING & NDE OF STORAGE TANKS 20
4.7 AMENDMENTS TO SECTION E 21
APPENDIX-01 MINIMUM EXTENT OF NDE FOR PIPING 27
APPENDIX-02 AGES-SP-07-007 28

LIST OF TABLES

Table 3-1: General Definitions 5
Table 3-2: Technical Definitions 7
Table 4-1: Abbreviations 10
Table 4-2: ADNOC Specifications 12
Table 4-3: Project Documents 13

HOLD LIST

PARAGRAPHS HOLD IN THIS ISSUE			
Hold No.	Section / Para No.	Page No.	Holds Description

1.0 INTRODUCTION

1.1 BACKGROUND

ADNOC aims to increase oil production to produce 5.0 MMBOPD by year-end 2027. Accordingly, associated gas production is anticipated to increase. Also, to meet the future oil and gas demand, non-associated gas developments are considered. Hence, the overall gas supply scenarios for major ADNOC Gas (hereafter referred to as COMPANY) assets i.e., Das Facilities, Bab and Habshan Complex (Habshan 0, 1, 2, 4, and 5), Asab and Bu Hasa, is anticipated to change depending on their feed sources, profiles including rates, compositions, and operating conditions. These changes will also subsequently impact the COMPANY downstream facilities, particularly, products handling and transferring facilities i.e., Sales Gas Network, NGL Pipeline Network, Ruwais Fractionation Trains (1, 2, 3, 4 and upcoming new Train 5 part of Bab Cap Gas SELECT Study), Sulphur Handling Facilities, and Condensate systems, etc.

COMPANY has carried out the Long Term DEFINE for the project with M/s Amec International Ltd. (M/s Wood) and subsequently decided to proceed with Long Term EXECUTE phase execution to ensure the readiness of COMPANY facilities to accommodate increased gas supply by December 2027.

Accordingly, COMPANY has awarded EPCm contract to M/s Amec International Ltd. (M/s Wood) to carry out the Long Term scope requirements. M/s Wood shall act as a single entity in the performance of the services and a single point of accountability to ADNOC Gas for the successful completion of Long Term EXECUTE phase.

1.2 LONG TERM EPCM PROJECT OBJECTIVES

The main objective of the Long Term EPCm is to execute the Habshan DBN Project to support ADNOC to achieve oil production target of 5.0 million BOPD so that Associated and Non-Associated Gas can be processed within the overall processing capacity of Habshan. The Long Term EPCm scope includes the following major areas as a minimum:

1. Habshan Complex (H0, H1 Train 1/2, H2, H4, H3 for SS-300 Tie-in)
2. Bab CDS and Bab NGL
3. Habshan 5
4. Pipeline scope activities including below new pipelines
   I. Bab CDS to Habshan Complex HP pipeline
   II. Bab CDS to Habshan Complex MP pipelines (2 no.s)
   III. Habshan 5 to Habshan 2 pipeline

The scope also includes adequacy checks for Ruwais NGL Fractionation Trains, MERAM,

Habshan Sulphur Granulation Plant, Sales gas, NGL, Condensate and interconnecting Pipeline network and Utilities for all impacted AG facilities.

The Long Term EPCM scope includes the following major activities as a minimum:

1. Detailed Engineering and design services
2. Procurement Services
3. Construction Management services
4. Pre-commissioning, Commissioning, Start-up services
5. Final documentation handover and Project close-out

Project also involves major interface activities with other on-going projects. Refer Project Interface management plan (Doc Num: PP-30201_50150_LT_HE-GG-000-50-00-006) for complete list of interface projects.

1.3 SCOPE BATTERY LIMIT

Refer Design Basis (Doc Num: BOD-30201_50150_LT_HE-GG-000-00-00-001) for the scope battery limits, Gas allocation and detailed Design basis.

2.0 PURPOSE OF THIS DOCUMENT

The purpose of this document, together with its attachment, is to define the Welding and Non Destructive Examination (NDE) requirements for piping, welded/cladded line pipe manufacture, storage tank, pressure vessel and heat exchanger under the PROJECT scope.

The requirement specified herein is applicable for newly constructed facilities and modification of impacted existing facilities under the project scope.

This document shall be read in conjunction with the attached COMPANY specification AGES-SP-07-007 Rev. 1.

3.0 DEFINITIONS

3.1 GENERAL DEFINITIONS

For this document, the following general definitions are applicable.

Table 3-1: General Definitions

DEFINITION	DESCRIPTION
COMPANY	ADNOC GAS (AG) for whom the SERVICES are being performed by the EPCm CONTRACTOR.
EPCm CONTRACTOR	Amec International Limited – Abu Dhabi (WOOD) appointed

DEFINITION	DESCRIPTION
	by COMPANY to perform Engineering, Procurement, Construction management, Pre-Commissioning and Commissioning stage for Long Term Solution (under EXECUTE phase).
FACILITIES	Habshan Complex (H0, H1 Train 1/2, H2, H4, H3 for SS-300 Tie-in), Bab CDS, Bab NGL, Habshan 5 and interconnecting pipelines.
LICENSOR	Supplier of packaged units and responsible for the operating and design performance.
MANUFACTURER/ VENDOR/ SUPPLIER	The Party (parties) which manufactures and/or supplies material, equipment, technical documents or drawings and/or services to perform the duties specified by the COMPANY
PMC	Project Management Consultant appointed by COMPANY for the PROJECT
PMT	Project Management Team
PROJECT	PROJECT 5.0 (P5), Long Term EPCm for HABSHAN DBN
SERVICES	The scope of work to be completed during the EXECUTE stage (EPCm) of the PROJECT.
VENDOR	The party(s) which manufactures and/or supplies piping, equipment and services to perform the duties specified
SHALL	The use of the word “shall” indicate a mandatory requirement
SHOULD	The use of the word “should” indicate a strong recommendation to comply with the requirements of this document
EPCm CONSTRUCTION CONTRACTOR	Subcontractor appointed by EPCm CONTRACTOR to carry out Construction works at site for respective construction packages.
SUB-CONTRACTOR	The COMPANY approved party, which carries out services subcontracted by EPCm CONTRACTOR.

3.2 TECHNICAL DEFINITIONS

For this document, the following technical definitions are applicable.

Table 3-2: Technical Definitions

DEFINITION	DESCRIPTION
Acid Gas	A gas stream containing predominantly H_2S and/or CO_2 from an Acid Gas Removal Unit
Condensate	A hydrocarbon liquid stream containing Pentane+ compounds
Dehydrated Gas	A gas stream that has been dehydrated to remove water
Dry Gas	A gas stream containing no liquids at flowing conditions, but which may still contain water and hydrocarbons that will fall out if there is a change in flowing conditions.
Feed Gas - Associated Gas	A Gas stream that is produced from an oil well during the extraction of crude oil.
Feed Gas – Non-associated Gas	Hydrocarbon gas originating from gas reservoirs.
GMP 2023	Gas Master Plan 2023
Lean Gas	Lean nature of gas is defined based C2+ in the gas stream. If C2+ is less than 15% then stream is defined as Lean gas
Mixed Feed Gas Stream	Mixed associated and non-associated gas stream
NGL	A liquid stream with primarily C2, C3, C4 and some C5+ compounds.
Rich Gas	Rich gas is defined based C2+ in the gas stream. If C2+ is more than 15% it is considered rich gas
Sales Gas	Residue gas sent to the Sales gas network.
Sour Gas	A gas stream containing significant amounts of H_2S and/or CO_2.
Sustainable Profile (GMP 2023)	GMP 2023 High Supply Scenario – unconstrained oil production from GMP Guidelines Document from all associated gas fields

DEFINITION	DESCRIPTION
Sweet Gas	A gas stream in which the H_2S and CO_2 are not present in significant amounts.
Technical Profile	AON provided profile for technical case for associated gas.
Technical Optimized case	The ADNOC Gas facilities (Das, Asab-0/3, Buhasa, Ruwais, associated pipelines) will be sized to accommodate technical rates from associated gas fields. Habshan facilities will be sized to accommodate technical rate from all associated gas fields (Bab, Buhasa, NEB, Offshore) but not simultaneously. All inlet facilities / inlet compression shall be designed for technical rate.
Unconstrained Production Profile / High Supply Scenario	This shall be based on Upstream's OPEC Unconstrained Oil production case. This scenario corresponds to sustainable projects profiles

4.0 AMENDMENTS

The The following amendments and additions shall apply to COMPANY AGES-SP-07-007 Rev.1 Welding & Non Destructive Examination (NDE) Specification.

Clauses not amended shall be considered applicable requirements of the specification.

Wherever amendments have been specified, these are noted with guide words such as "REPLACE", "ADD", "DELETE" or "MODIFY.

(Add) New paragraph or supplemental requirements and/or clarifications added to an existing paragraph.

(Replace) Replace the complete paragraph / section.

(Modify) Where the words in an existing clause have been modified but not a substitution that invalidates the paragraph.

(Delete) Where the clause no longer applies and is removed, either in full or in part.

4.1 AMENDMENTS TO SECTION 1 – GENERAL

4.1.1 Amendments to Section 1.1 – Introduction

- Replace the 1st paragraph in Section 1.1 Introduction:

  This Specification describes the welding and NDE requirements for existing and new facilities including piping, storage tanks, pressure vessels and heat exchangers. This

document is a general specification that is applicable to COMPANY'S Onshore and Offshore production, Gas Processing, Petrochemical and Refining facilities.

With:

This Specification describes the welding and NDE requirements for existing and new facilities including piping, pressure vessels and heat exchangers. This document is a PROJECT specification that is applicable to COMPANY'S Gas Onshore facilities under P5.0 Long Term DEFINE scope.

- In the 3rd paragraph, replace:

  For details of Welding and NDE for structural steelwork refer to AGES-SP-01-002.

  With:

  For details of Welding and NDE for structural steelwork refer to Addendum to AGES-SP-01-002 Structural Steel Supply, Fabrication and Erection – Common (Doc. No. 30201_50150_LT_HE-ADD-SP-01-002).

- In the 4th paragraph, delete "Appendix E2 - Welding & NDE Requirements For Cr-Mo / Cr-Mo-V Steel In High Temperature, High Pressure Hydrogen Service".

- Add the following:

  For piping fabrication, the requirement as specified in Addendum to AGES-SP-09-007 Specification for Shop and Field Fabrication of Piping (Doc. No. 30201_50150_LT_HE-ADD-SP-09-007) shall also be met.

  For pressure vessel, heat exchanger and storage tank, the additional fabrication and installation requirement as specified in equipment's project specification, datasheet and drawing shall also be met.

  In addition to requirement specified in ASME BPVC Sect. IX and other relevant project Specification/Datasheet, this document also applicable for manufacturing of welded/cladded line pipe.

  For pipeline field welding and NDE requirement, refer to Addendum to DGS-6300-004 Pipeline Welding Specification (Doc. No. 30201_50150_LT_HE-ADD-6300-004).

4.1.2 Amendments to Section 1.2 – Purpose

- Replace the 1st sentence in Section 1.2 Purpose:

  The purpose of this Specification is to define welding requirements for upstream and downstream oil, gas, and petrochemical processes.

  With:

  All paragraphs under Section 2.0 (PURPOSE OF THIS DOCUMENT) of this document.

4.1.3 Amendments to Section 1.3 – Definitions and Abbreviations

- Replace the definition of "COMPANY", "CONTRACTOR", "MANUFACTURER" and "SUPPLIER" with definition specified in Table 3-1, Section 3 of this document.
- Add:

  Wherever "CONTRACTOR" is specified, it shall be read as "EPCm CONTRACTOR".

  Wherever "APPENDIX 3" is specified, it shall be read as "APPENDIX E3".

  When mentioned, the term "NDT (Non Destructive Testing)" shall be considered synonymous with Non Destructive Examination (NDE).
- Delete following abbreviations in "Table 1-1 List of Abbreviations".

  - BSI
  - ISR
  - FBH
  - DHT
  - OT
  - HTHA
  - DIN
  - QAS
  - SDH
  - DNV
  - RHC
- Add following abbreviations (in "Table 4-1") to "Table 1-1 List of Abbreviations" in Section 1.3.

Table 4-1: Abbreviations

Abbreviation	Description
ADNOC	Abu Dhabi National Oil Company
AG	ADNOC Gas
AGES	ADNOC Group Engineering Specification
BOD	Basis of Design
BOP	Balance of Plant
BOPD	Barrels of Oil per Day
EPC	Engineering, Procurement and Construction
FL	Fusion Line
GMP	Gas Master Plan
MMBOPD	Million Barrels of Oil per Day
MMSCFD	Metric Million Standard Cubic Feet per Day
NGL	Natural Gas Liquids

UAE	United Arab Emirates
WMC	Weld Metal Centreline
WRPQ	Weld Repair Procedure Qualification

4.2 AMENDMENTS TO SECTION A – GENERAL

4.2.1 Amendments to Section 2.1 – International Code and Standards

- **ASME BOILER AND PRESSURE VESSEL CODE**

  Modify the following:

  - ASME IX Welding, Brazing, and Fusing Qualifications

- **AMERICAN PETROLEUM INSTITUTE (API)**

  Delete the following:

  - API RP 934-A
  - API RP 934-C

- **AMERICAN SOCIETY FOR TESTING AND MATERIALS (ASTM)**

  Modify the following:

  - E94 – Standard Guide for Radiographic Examination Using Industrial Radiographic Film
  - E110 – Standard Test Method for Rockwell and Brinell Hardness of Metallic Materials by Portable Hardness Testers
  - E140 – Standard Hardness Conversion Tables for Metals Relationship Among Brinell Hardness, Vickers Hardness, Rockwell Hardness, Superficial Hardness, Knoop Hardness, Scleroscope Hardness, and Leeb Hardness

- **AMERICAN WELDING SOCIETY (AWS)**

  Modify the following:

  - AWS A5.01M/A5.01:2019 (ISO 14344:2010 MOD) – Welding and Brazing Consumables Procurement of Filler Metals and Fluxes

- **BRITISH STANDARD**

  Delete the following:

  - BS 7448, Part 1, Part 2
  - BS EN ISO 15653

- **DET NORSKE VERITAS (DNV)**

  Delete the following:

- DNV ST F101

- **DEUTSCHE INSTITUTE FUR NORMUNG (DIN)**

  Replace:

  - DIN 54109 - Part 1 Non-Destructive Testing: Image Quality of Radiographs of Metallic Materials

    With:

    ISO 17636-1 Non-destructive Testing of Welds.

- **INTERNATIONAL STANDARDS ORGANISATION (ISO)**

  Modify the following:

  - ISO 9004 – Quality management - Quality of An Organization - Guidance to Achieve Sustained Success

  Add the following:

  - ISO/IEC 17025 – Testing and Calibration Laboratories

4.2.2 Amendments to Section 2.2 – ADNOC Specifications

Replace the whole section 2.2 – ADNOC Specifications with following:

Table 4-2: ADNOC Specifications

Sl. No.	Document Number	Document Title
1	AGES-GL-07-001	Material Selection Guidelines
2	AGES-SP-07-008	Metallic Materials - Prevention of Brittle Fracture
3	AGES-SP-07-009	Galvanizing
4	AGES-SP-07-010	Internal Cleaning of Piping System Specification
5	AGES-SP-07-011	Preservation & Export Packing Specification
6	AGES-SP-13-001	Criticality Rating Specification
7	AGES-SP-13-002	Procurement Inspection and Certification Requirement in Projects
8	AGES-SP-13-003	Traceability of Shop & Field Piping

Sl. No.	Document Number	Document Title
		Materials
9	AGES-GL-13-001	Contractors QA/QC Requirement
10	AGES-GL-13-002	Positive Material Identification of Equipment and Piping Guidelines

Add the following:

Table 4-3: Project Documents

Sl. No.	Document Number	Document Title
1	30201_50150_LT_HE-ADD-SP-04-002	ADDENDUM TO AGES-SP-04-002 CONTROL VALVE SPECIFICATION
2	30201_50150_LT_HE-ADD-SP-05-011	ADDENDUM TO AGES-SP-05-011 WATER TREATMENT AND CHEMICAL INJECTION PACKAGES SPECIFICATION
3	30201_50150_LT_HE-ADD-SP-06-002	ADDENDUM TO AGES-SP-06-002 PRESSURE VESSEL SPECIFICATION
4	30201_50150_LT_HE-ADD-SP-06-003	ADDENDUM TO AGES-SP-06-003 SHELL AND TUBE HEAT EXCHANGER SPECIFICATION
5	30201_50150_LT_HE-ADD-SP-06-004	ADDENDUM TO AGES-SP-06-004 AIR COOLED HEAT EXCHANGER SPECIFICATION
6	30201_50150_LT_HE-ADD-SP-06-005	ADDENDUM TO AGES-SP-06-005 ABOVE GROUND VERTICAL STORAGE TANKS SPECIFICATION
7	30201_50150_LT_HE-ADD-SP-06-009	ADDENDUM TO AGES-SP-06-009 WATER TUBE BOILERS SPECIFICATION
8	30201_50150_LT_HE-ADD-SP-06-011	ADDENDUM TO AGES-SP-06-011 VESSEL TRAYS AND INTERNALS

Sl. No.	Document Number	Document Title
		SPECIFICATION
9	30201_50150_LT_HE-ADD-SP-06-012	ADDENDUM TO AGES-SP-06-012 PLATE AND FRAME HEAT EXCHANGERS SPECIFICATION
10	30201_50150_LT_HE-ADD-SP-07-001	ADDENDUM TO AGES-SP-07-001 CATHODIC PROTECTION SPECIFICATION
11	30201_50150_LT_HE-ADD-SP-07-003	ADDENDUM TO AGES-SP-07-003 REQUIREMENT FOR MATERIALS IN SEVERE SERVICE
12	30201_50150_LT_HE-ADD-SP-07-004	ADDENDUM TO AGES-SP-07-004 PAINTING AND COATING SPECIFICATION
13	30201_50150_LT_HE-ADD-SP-09-001	ADDENDUM TO AGES-SP-09-001 PIPING BASIS OF DESIGN
14	30201_50150_LT_HE-ADD-SP-09-002	ADDENDUM TO AGES-SP-09-002 PIPING MATERIAL SPECIFICATION
15	30201_50150_LT_HE-ADD-9510-004	ADDENDUM TO DGS-9510-004 FOR ONSITE, NON PIGGABLE PIPING MATERIALS
16	30201_50150_LT_HE-ADD-SP-09-003	ADDENDUM TO AGES-SP-09-003 MANUAL PIPING AND PIPELINE VALVES
17	30201_50150_LT_HE-ADD-SP-09-006	ADDENDUM TO AGES-SP-09-006 PIPE SUPPORT SPECIFICATION
18	30201_50150_LT_HE-ADD-SP-09-007	ADDENDUM TO AGES-SP-09-007 SPECIFICATION OF SHOP AND FIELD FABRICATION OF PIPING
19	30201_50150_LT_HE-ADD-SP-09-008	ADDENDUM TO AGES-SP-09-008 INSULATION SPECIFICATION

Sl. No.	Document Number	Document Title
20	30201_50150_LT_HE-ADD-SP-09-009	ADDENDUM TO AGES-SP-09-009 PIPING TIE-INS AND HOT TAPPING
21	30201_50150_LT_HE-ADD-SP-09-013	ADDENDUM TO AGES-SP-09-013 SPECIFICATION FOR METALLIC PIPE, FITTINGS AND FLANGES
22	30201_50150_LT_HE-ADD-SP-09-015	ADDENDUM TO AGES-SP-09-015 CLAD PIPES, FITTINGS AND FLANGES SPECIFICATION
23	30201_50150_LT_HE-ADD-1300-016	ADDENDUM TO DGS-1300-016 PIPING COLOR IDENTIFICATION SPECIFICATION
24	30201_50150_LT_HE-ADD-6300-004	ADDENDUM TO DGS-6300-004 PIPELINE WELDING SPECIFICATIONS
25	30201_50150_LT_HE-ADD-SP-10-006	ADDENDUM TO AGES-SP-10-006 CRA CLAD AND LINED STEEL PIPE (AMENDMENTS_SUPPLEMENTS TO API SPEC 5LD)

4.2.3 Amendments to Section 3 –Document Precedence

- Replace the whole paragraph under Section 3 –Document Precedence with:

  In the event of any conflict between the applicable documents, the order of precedence shall be as follows:

  6. UAE Statutory Legislation and Environmental Regulations
  7. ADNOC HSE Regulations, HSE Standards and HSE Code of Practice
  8. Data Sheets
  9. Design Basis
  10. Project Specifications and addendum to AGES / DGS (Note-1)
  11. COMPANY Standards / Specifications and AGES / DGS (Note-1)
  12. International Codes and Standards

  Note-1 AGES Addendum/AGES shall be considered wherever AGES addendum/AGES

is available. DGS Addendum/DGS shall be considered only in case AGES Addendum/AGES is not available.

However, in case of conflict between the various specifications, standards and the requisition, most stringent requirements shall govern. EPCm CONTRACTOR/VENDOR shall refer any such conflict, and any other matter, which requires further interpretation, to the attention of COMPANY and COMPANY's interpretation shall be final. Resolution of any conflict shall be obtained from COMPANY in writing before proceeding.

Any deviation from COMPANY standard accepted in the existing facility design shall not be considered as basis for this PROJECT design and any deviations shall be submitted to COMPANY for approval before proceeding.

4.2.4 Amendments to Section 5 – Quality Assurance / Quality Control

- Add the following:

  All laboratory (i.e., mechanical and chemical) testing shall be performed by a certified testing laboratory approved by COMPANY. As minimum, the laboratory shall have quality management system in accordance with ISO 9001 and ISO 17025.

4.3 AMENDMENTS TO SECTION B

4.3.1 Amendments to Section B0-1 – Introduction

- In the last paragraph, delete following:

Appendix E2	Welding & NDE Requirements For Cr-Mo / Cr-Mo-V Steel In High Temperature, High Pressure Hydrogen Service.	As defined in AGES-07-005 Requirements For Cr-Mo / Cr-Mo-V Steel In High Temperature, High Pressure Hydrogen Service

- In the last paragraph, replace:

  As defined in AGES-SP-07-003 Requirements For Materials In Severe Service

  With:

  As defined in Addendum to AGES-SP-07-003 Requirement for Materials in Severe Service (Doc. No. 30201_50150_LT_HE-ADD-SP-07-003)

4.4 AMENDMENTS TO SECTION B (PART 1) – WELDING AND NDE – GENERAL

4.4.1 Amendments to Section B1-1.1 – Welding Procedure and Qualification

- Replace point (f) below:

  The use of any welding procedure previously qualified shall be approved by COMPANY case by case. However, the assigned inspector and the contractor welding engineer/representative shall verify that the welding procedure is within the welding

parameters qualification range (e.g., diameter, thickness, material grade, etc.) for the new job.

With:

The use of any welding procedure previously qualified shall be approved by COMPANY case by case. However, the assigned inspector and the EPCm CONTRACTOR welding engineer/representative shall verify that the welding procedure is within the welding parameters qualification range (e.g., diameter, thickness, material grade, etc.) for the new job. Exception of Sour Service, where weld procedure qualification tests are required to be performed on contract material.

4.4.2 Amendments to Section B1-1.4 – Welder Performance Register / Matrix

- Add:

  The welder performance register / matrix shall be up-to-date prior works commence and shall be validated/signed by responsible EPCm CONTRACTOR QA/QC Manager or Welding Supervisor/Coordinator.

4.4.3 Amendments to Section B1-1.5 – Consumables Storage and Handling Procedure

- Delete “PWHT Procedure” after last sentence.

4.4.4 Amendments to Section B1-2.1.2 – Impact Testing

- Replace point:

  b. Test locations shall be as shown in

  With:

  b. Notch test locations shall be as shown in Figure B1.1. Each notch location shall consist of 3 (three) specimens.

- Replace point:

  c. Figure B1.1.

  With:

  c. Sampling locations shall be taken in accordance with ASME BPVC Sect IX Figure QW-463.1(f).

4.4.5 Amendments to Section B1-3.1 – Welding Processes

- Replace:

  Notes v. ESW may be used for cladding / overlaying components for piping, pressure vessels& heat exchanges and tanks, ref Appendix 1

  With:

  Notes v. ESW may be used for cladding / overlaying components for piping, pressure

vessels & heat exchanges and tanks, ref Appendix E1

- Delete “Notes vii FCAW is not approved for offshore use”.

4.4.6 Amendments to Section B1-3.4.2.2 – Consumables

- Delete sub-point (i), (ii) and (iii) under point (e).
- Add new point below after point (g):

  h. Filler metal conforming to ER70S-6 shall not be used with GTAW process for sour service. If ER70S-6 is to be used with GMAW process for sour service, the chemistry of the wire shall not exceed the requirements of NACE SP0472 (as follows):

  i. Carbon (C) 0.10wt% max;

  ii. Manganese (Mn) 1.60 wt% max;

  iii. Silicon (Si) 1.00 wt% max

4.4.7 Amendments to Section B1-3.4.11.1 – Consumables

- Replace 2nd sentence:

  When proposed, specific authorization must be obtained from the CONTRACTOR.

  With:

  When proposed, specific authorization must be obtained from EPCm CONTRACTOR and COMPANY.

4.4.8 Amendments to Section B1-4.3 – Preheat

- Replace point “(i)” and “(ii)” at notes on table B1.3 with “(1)” and “(2)”, respectively.

4.4.9 Amendments to Section B1-4.4 – Post Weld Heat Treatment (PWHT)

- Replace point:

  k. No weld repairs to joints that have been PWHT shall be carried out without prior approval from CONTRACTOR. Neither shall any re-PWHT be carried out without prior approval from CONTRACTOR.

  With:

  k. No weld repairs to joints that have been PWHT shall be carried out without prior approval from EPCm CONTRACTOR and COMPANY. Neither shall any re-PWHT be carried out without prior approval from EPCm CONTRACTOR and COMPANY.

- Replace 2nd sentence at point (x):

  The calibration frequency may be extended to 12 months with the approval of contractor if the documented calibration checks for that particular recorder demonstrate acceptable accuracy for a suitable period.

With:

The calibration frequency may be extended to 12 months with the approval of EPCm CONTRACTOR and COMPANY if the documented calibration checks for that particular recorder demonstrate acceptable accuracy for a suitable period.

- Replace 1st sentence at point (aa):

  All PWHT chart records shall be submitted to contractor for review and approval.

  With:

  All PWHT chart records shall be submitted to EPCm CONTRACTOR and COMPANY for review and approval.

4.4.10 Amendments to Section B1-4.7 – Weld Repairs

- Replace point:

  e. The repaired areas shall be re-examined using the same examination method and procedure by which the defect was originally detected, when approved by CONTRACTOR.

  With:

  The repaired areas shall be re-examined using the same examination method and procedure by which the defect was originally detected, when approved by EPCm CONTRACTOR and COMPANY.

- Replace 2nd sentence at point (f):

  No further attempts to repair shall be carried out without the authorization of the CONTRACTOR.

  With:

  No further attempts to repair shall be carried out without the authorization of the EPCm CONTRACTOR and COMPANY.

4.4.11 Amendments to Section B1-5.9 – Production Hardness Testing

- Replace 3rd sentence at point (h):

  The use of methods other than portable Brinell tester require CONTRACTOR approval.

  With:

  The use of methods other than portable Brinell tester require EPCm CONTRACTOR and COMPANY approval.

- Replace point:

  k. The COMPANY`s representative may witness the performance of production hardness testing. The documented test results shall be submitted to the CONTRACTOR when

requested.

With:

k. The EPCm CONSTRUCTION CONTRACTOR and COMPANY`s representative may witness the performance of production hardness testing. The documented test results shall be submitted to the EPCm CONTRACTOR and COMPANY when requested.

4.4.12 Amendments to Section B1-5.11 – Ferrite Testing

- Replace last sentence:

  Documentation of test results shall be available for review by the CONTRACTOR.

  With:

  Documentation of test results shall be available for review by the EPCm CONTRACTOR and COMPANY.

4.5 AMENDMENTS TO SECTION B (PART 2) – WELDING AND NDE OF PIPING SYSTEMS

4.5.1 Amendments to Section B2-5.1 – Minimum Extent of NDE

- Replace the 1st paragraph:

  NDE shall be as a minimum as required by the fabrication or as detail on the fabrication drawings but shall be no lower than the values shown in Table B2.4.

  With:

  NDE for piping shall be as a minimum as required by APPENDIX-01 of this Document.

- Delete Table B2.4.

4.6 AMENDMENTS TO SECTION B (PART 4) – WELDING & NDE OF STORAGE TANKS

4.6.1 Amendments to Section B4-3.1 – Acceptable Welding Processes

- Replace below 1st sentence at point (a):

  Other welding processes, such as Gas Metal Arc Welding - Short Circuit Transfer, (GMAW-S) Manual Submerged Arc Welding, Electroslag Welding and Flux Cored Arc Welding require specific written approval from the CONTRACTOR.

  With:

  Other welding processes, such as Gas Metal Arc Welding - Short Circuit Transfer, (GMAW-S) Manual Submerged Arc Welding, Electroslag Welding and Flux Cored Arc Welding require specific written approval from the EPCm CONTRACTOR and COMPANY.

4.6.2 Amendments to Section B4-4.1 – Weld Joint Design

- Add new sub-section as follows:

B4-4.1.11 Bottom to Shell Plate Joint

a. The lower shell plates shall be welded to the bottom annular plates by continuous fillet welds on both sides.

b. The leg length of both fillet welds shall be equal to the thickness of the bottom annular plates, except when the shell plate thickness is less than the bottom annular plate thickness, in which case the leg length of each filet weld shall not exceed the thickness of the shell plate by more than 1.5 mm.

4.6.3 Amendments to Section B4-4.1.12 – Joints in Tank Bottom Plates

- Delete point (d), (e), and (f).

4.6.4 Amendments to Section B4-4.2 – Weld Joint Preparation

- Replace point:

  b. Tack welds in the horizontal joints between shell plates, and in the joints between roof plates and shell plates, need not be removed provided that they are sound and free from cracks, that the covering beads are thoroughly fused into them, and that the quality of the welding is to the satisfaction of the CONTRACTOR'S representative.

  With:

  b. Tack welds in the horizontal joints between shell plates, and in the joints between roof plates and shell plates, need not be removed provided that they are sound and free from cracks, that the covering beads are thoroughly fused into them, and that the quality of the welding is to the satisfaction of the EPCm CONTRACTOR and COMPANY'S representative.

4.7 AMENDMENTS TO SECTION E

- Whenever specified in Section E, replace "AGES-SP-07-003" with "Addendum to AGES-SP-07-003 Requirement for Materials in Severe Service (Doc. No. 30201_50150_LT_HE-ADD-SP-07-003".

4.7.1 Amendments to Section E1 – Welding & NDE Requirements for Weld Overlay

- Modify below tittle on Section E1:

  APPENDIX E1– WELDING & NDE REQUIREMENTS FOR WELD OVERLAY

  With:

  APPENDIX E1 – WELDING & NDE REQUIREMENTS FOR CLAD AND WELD OVERLAY

4.7.2 Amendments to Section E1-2 – Welding Procedure Qualification

- Add below paragraph in Section E1-2:

  All weld overlay Procedure Qualification tests performed at shop, shall be subject to

witness and approval by COMPANY or COMPANY Third Party Inspection (TPI).

4.7.3 Amendments to Section E1-6 – Welding Requirements

- Add new sub-section as follows:

  E1-6.2 Cladded Branch and Fitting

  For welding of branch connection or welding with clad header pipes and associated pipe fitting fabrication (i.e., weldolet), a separate methodology shall be prepared by EPCm CONSTRUCTION CONTRACTOR to ensure that all wetted areas are covered by CRA clad. The method statement for weldolet installation on cladded pipe and WPQR shall be submitted for COMPANY review and approval. Refer to Appendix 2 of Addendum to AGES-SP-09-015 Clad Pipes, Fittings and Flanges Specification (30201_50150_LT_HE-ADD SP-09-015) for further details.

4.7.4 Amendments to Section E1-8 – Testing

- Add new sub-section as follows:

  E1-8.4 Corrosion Testing for Austenitic Stainless Steel Clad

  Intergranular Corrosion Test (IGC) shall be performed in accordance with ASTM A262 Practice E method. The acceptance criteria will be no visible corrosion, no fissures, and no cracking at 5 to 20x magnification.

  E1-8.5 Corrosion Testing for Alloy 825 and 625 Clad

  a. Corrosion specimens shall be prepared by removing the backing carbon steel by milling or by other means. The thickness of the specimen shall not be less than 2.0 mm. No additional passivation shall be allowed.

  b. An intergranular corrosion test in accordance with ASTM G28 Method A shall be performed with maximum corrosion rate acceptance not exceeding 0.457 and 0.914 mm per year for UNS N08825 and UNS N06625, respectively.

  c. A pitting corrosion test shall be done in conformance with ASTM G48 Method A. No pitting shall be visible at a 20x magnification, and the weight loss shall be less than 4.0 $g/m^2/24$ h at 22 °C for UNS N08825 and 40 °C for UNS N06625.

4.7.5 Amendments to Section E1-9 – Non-Destructive Examination

- Add new sub-section as follows:

  E1-9.6 Additional NDE Requirements for Cladded Plates

  Integrally clad plate shall be of the homogeneously clad type as obtained by roll cladding or explosive cladding.

  The clad plates shall conform to ASME SA263, SA264, or SA265, as applicable. The ultrasonic testing acceptance shall be as per Quality Level, Class - 3.

  Integrally clad plate and linings applied by overlay weld depositing shall be ultrasonically

tested by random at the extent of 10 % of the surfaces to check the quality of the bond in accordance with the requirements of ASME SA263, SA264, or SA265, as applicable. This also applies for clad restoring at welds in clad plate where a band of 50 mm wide on each side of the weld shall be examined. The ultrasonic testing acceptance shall be as per Quality Level, Class - 3.

Radiographic examination shall be used for plate thickness up to 50 mm (or 25 mm if double wall technique is used). In lieu of Radiography, PAUT and TOFD in compliance with ASME Section VIII, Div. 2 shall be carried out.

PAUT and NDT procedures shall be reviewed and approved by Independent (Third party) PCN / ISO 9712 Level 3 in PAUT and TOFD for thickness greater than 80 mm.

For wall thickness greater than 50 mm, PAUT and TOFD examination in compliance with ASME Section VIII, Div. 2 shall be carried out.

Radiography examination is permitted with COMPANY approval wherever PAUT/TOFD is not feasible.

In that case, Flush the weld and carryout Manual UT examination with 0°. Carryout UT with 45°, 60°, and 70° probes also for 100 mm on either side of the weld.

Category D joints shall be inspected by PAUT or RT for all thickness. The areas not covered by PAUT shall be inspected by creep waves (Surface waves). Lip type nozzles shall be used if volumetric NDT is not feasible for Category D joints.

The above requirements are also applicable for Cladded Vessels welded by Carbon steel consumables and for Spheres. For weld joints with SS / Inconel consumables, EPCm CONSTRUCTION CONTRACTOR shall submit the volumetric NDT Procedure for COMPANY approval.

4.7.6 Amendments to Appendix E2 – Welding & NDE Requirements for Cr-Mo / Cr-Mo-V Steel in High Temperature, High Pressure Hydrogen Service

- Delete the whole section of Appendix E2 – Welding & NDE Requirements for Cr-Mo / Cr-Mo-V Steel in High Temperature, High Pressure Hydrogen Service.

4.7.7 Amendments to Section E3-0 – General

- Add:

  The additional fabrication requirement for severe service as specified in Project Specification, Datasheet and Drawing with respect to the equipment type (i.e., Piping, Pressure Vessel, Heat Exchanger, Storage Tank) shall also be met.

4.7.8 Amendments to Section E3-1.4.4.1 – Parent Materials

- Replace:

  PQR and WPQR tests shall use a pipe with CEV not more than 0.01 point below the maximum allowed in the linepipe order specification, or pipe with the maximum CEV

delivered for the project.

With:

Welding Procedure Qualification Test (WPQT) and Weld Repair Procedure Qualification (WRPQ) tests shall use a pipe with CEV not more than 0.01 point below the maximum allowed in the linepipe order specification, or pipe with the maximum CEV delivered for the project.

4.7.9 Amendments to Section E3-1.4.4.2 – Macro Examinations and Hardness Survey

- Replace below point (b) and (c):

  b. Following satisfactory macro examination, a Vickers hardness survey using a 10 Kg load (HV10) shall be made on the macro specimens. The general procedure shall be in accordance with ASTM E384 and NACE SP0472 for downstream and NACE MR0175 / ISO15156-2 for upstream applications.

  c. Survey layouts for weld repair qualifications and other weld geometries shall be carried out in accordance with NACE MR0103 / ISO 17945 and NACE MR0175 / ISO 15156-2 as applicable.

  With:

  b. Following satisfactory macro examination, a Vickers hardness survey using a 10 Kg load (HV10) shall be made on the macro specimens. The general procedure shall be in accordance with ASTM E384 and NACE MR0175 / ISO15156-2 for upstream applications.

  c. Survey layouts for weld repair qualifications and other weld geometries shall be carried out in accordance with NACE MR0175 / ISO 15156-2 as applicable.

4.7.10 Amendments to Section E3-1.4.4.4 – Preheat and Interpass Temperature

- Replace point:

  a. The preheat used for PQR shall not be greater than that used for production welding.

  With:

  a. The preheat used for production welding shall not be less than that specified in PQR.

- Replace 1st sentence of point (b):

  The base metal and inter pass temperature of all welds shall be maintained at not less than the minimum specified preheat temperature until the weld is completed.

  With:

  The preheat of all welds shall be maintained at not less than the minimum specified preheat temperature until the weld is completed.

4.7.11 Amendments to Section E3-1.4.6.1 – General

- Replace the whole paragraph:

  The manufacture, welding and the properties of Stainless Steel (SS) and Corrosion Resistant Alloys (CRAs) shall comply with the requirements of NACE MR0175 / ISO 15156-3 or NACE MR0103 / ISO 17945 (including all heat treatments and hardness limits) as applicable, with any modifications and additional requirements in this Specification / Supplement. Specific requirements for upstream and downstream services are given in the applicable sections of this supplement.

  With:

  The manufacture, welding and the properties of Stainless Steel (SS) and Corrosion Resistant Alloys (CRAs) shall comply with the requirements of NACE MR0175 / ISO 15156-3 (including all heat treatments and hardness limits) as applicable, with any modifications and additional requirements in this Specification / Supplement.

4.7.12 Amendments to Section E3-1.4.6.3.1– General

- Replace 2nd paragraph:

  The requirements regarding welding procedures, welding qualification, testing and weld properties shall be applicable in accordance with NACE MR0175 / ISO 15156-3 or NACE MR0103 / ISO 17945 as applicable, in addition to the requirements of this specification that applies for the equipment or piping.

  With:

  The requirements regarding welding procedures, welding qualification, testing and weld properties shall be applicable in accordance with NACE MR0175 / ISO 15156-3 as applicable, in addition to the requirements of this specification that applies for the equipment or piping.

4.7.13 Amendments to Section E3-1.4.6.4.1 – General Requirements

- Replace below point (a):

  a. The preheat used for PQR shall not be greater than that used for production welding.

  With:

  a. The preheat used for production welding shall not be less than that specified in PQR

4.7.14 Amendments to Section E3-1.4.6.4.3 – Macro Examinations and Hardness Survey

- Replace below last sentence at 1st paragraph:

  The general procedure shall be in accordance with ASTM E384 and NACE SP0472.

  With:

  The general procedure shall be in accordance with ASTM E384 and NACE MR0175 /

ISO 15156.

- Replace all below 2nd paragraph:

  Survey layouts for weld repair qualifications and other weld geometries shall follow the same principles according to NACE MR0103 / ISO 17945 and NACE MR0175 / ISO 15156-2 as applicable.

  With:

  Survey layouts for weld repair qualifications and other weld geometries shall follow the same principles according to NACE MR0175 / ISO 15156-2 as applicable.

4.7.15 Amendments to Section E3-1.4.6.7 – Production Weld Testing PMI

- Replace section title:

  E3-1.4.6.7 – Production Weld Testing PMI

  With:

  E3-1.4.6.7 – Production Weld Testing (PMI and Ferrite)

4.7.16 Amendments to Section E3-1.6 – Requirements For Severe Service In Downstream Refinery

- Delete the whole section of Section 3-1.6 Requirements For Severe Service In Downstream Refinery.

4.7.17 Amendments to Section E3-6.1.1.2 – Production Hardness Testing

- Delete below point (d) vii:

  vii. For downstream refinery applications, all pressure-retaining welds that fall within the scope of NACE SP0472 shall be hardness tested after final PWHT. Weld metal hardness shall not exceed 200 HBW. Unless exempted by NACE SP0472, the SUPPLIER shall perform Brinell hardness tests on every 3m of main seam weld, but not less than one set of readings for each main seam. One Brinell hardness reading shall be taken on each nozzle weld, manway weld and piping buttweld. When access is available, tests shall be performed on the process contacted side of the weld.

4.7.18 Amendments to Section E3-6.1.1.3 – Weld Procedure Qualification Hardness Testing

- Replace below 1st sentence:

  Each PQR shall include a macro section and Vickers hardness readings - indicated as per NACE SP0472 with minimum 3 hardness measurement indentations in each area of the HAZ and in each of the weld metal base metal.

  With:

  Each PQR shall include a macro section and Vickers hardness readings - indicated as per MR0175 / ISO 15156 with minimum 3 hardness measurement indentations in each area of the HAZ and in each of the weld metal and base metal.

APPENDIX-01 MINIMUM EXTENT OF NDE FOR PIPING

ADNOC	ADNOC GAS	wood.
	DEFINE STAGE PROJECT P5.0 (P5)	
	ADDENDUM TO AGES-SP-07-007 WELDING & NON DESTRUCTIVE EXAMINATION (NDE)	
	DOCUMENT NO.: 30201_50150_LT_HE-ADD-SP-07-007 — Rev. 1	

APPENDIX-01 MINIMUM EXTENT OF NDE FOR PIPING (HABSHAN)

SL_No	Piping Class	Fluid Service	Service Condition			Basic Material	ASME Class	Design Condition			Size Range	Minimum Extent of NDE (%)						Remarks
			Fluid Description	Special Requirements	PWHT			Pressure Max/Min Barg	Min Temp. Deg C	Max. Temp. Deg C	DN	DPT	MT	RT / UT (Note-3, 4, 5)	PMI	Ferrite Test	HARDNESS (Note-24)	
NEW AGES PIPE CLASSES DEVELOPED FOR THE PROJECT																		
1	AC1A6D-FA	HYDROCARBON-NON SOUR	OPEN DRAIN	NON SOUR	As Per ASME B31.3	CS	CL 150 RF	19.6/15.8	-29	150	15 - 600	-	10	10	-	-	-	
2	AC1L3D-FA	HYDROCARBON-SOUR-LETHAL	CLOSED DRAIN, FEED GAS, ACID GAS	SOUR + LETHAL SERVICE	Note 11	CS	CL 150 RF	19.6 / 15.8	-29	150	15-750	-	100	100	-	-	5 / 100	
3	AC1P3A-FA	CAUSTIC-NON SOUR	CAUSTIC	NON SOUR	Yes	CS	CL 150 RF	19.6/15.8	0	150	15 - 600	-	10	10	-	-	10 / 100	
3	AC1S3D-FA	HYDROCARBON-SOUR	CLOSED DRAIN, FUEL GAS BLOWDOWN	SOUR	Note 11	CS	CL 150 RF	19.6/15.8	-29	150	15 - 600	-	100	100	-	-	5 / 100	
5	AC4A3B-FA	INSTRUMENT AIR, PLANT AIR, UTILITY WATER	INSTRUMENT AIR, PLANT AIR, UTILITY WATER	NON SOUR	As Per ASME B31.3	CS-GALVANIZED	CL 150 RF	19.6/15.8	-29	150	25-400	-	5	5	-	-	-	
6	AL1L3D-FA	HYDROCARBON-SOUR-LETHAL	CLOSED DRAIN, FEED GAS,FLARE	SOUR + LETHAL SERVICE	Note 11	LTCS	CL 150 RF	19.6/15.8	-46	150	15-400	-	100	100	-	-	5 / 100	
7	AN1L0D-FC	HYDROCARBON-SOUR-LETHAL	FEED GAS	SOUR + LETHAL SERVICE	Note 11	UNS N08825	CL 150 RF	20.0/15.8	-100	150	15-600	100	-	100	100	-	5 / 100	
8	AP2A0A-FA	POTABLE WATER	POTABLE WATER (UNDER GROUND)	NON SOUR	NA	HDPE	CL 150 FF	16	0	65	50-250	-	-	-	-	-	-	
9	BC1L3D-FA	HYDROCARBON-SOUR-LETHAL	FEED GAS, CLOSED DRAIN	SOUR + LETHAL SERVICE	Note 11	CS	CL 300 RF	51.1/45.1	-29	150	15-600	-	100	100	-	-	5 / 100	
								24.1	-29	150	750-1050							
10	BE1L0D-FA	HYDROCARBON-SOUR-LETHAL	HC CONDENSATE, SOUR WATER, FEED GAS	SOUR + LETHAL SERVICE	Note 11	CS + Clad 825	CL 300 RF	51.1/45.1	-29	150	15 - 100 150 - 1050	100	-	100	100	-	5 / 100	
11	BE3L0D-FA	HYDROCARBON-SOUR-LETHAL	HC CONDENSATE	SOUR + LETHAL SERVICE	Note 11	LTCS+CLAD 825	CL 300 RF	51.1/45.1	-46	150	15 - 100 150 - 600	100	-	100	100	-	5 / 100	
12	BL1L3D-FA	HYDROCARBON-SOUR-LETHAL	FEED GAS	SOUR + LETHAL SERVICE	Note 11	LTCS	CL 300 RF	51.1/45.1	-46	150	15-600	-	100	100	-	-	5 / 100	
								40	-46	135	650-750							
								24.1	-46	110	900-1050							
13	CC1L3D-FA	HYDROCARBON-SOUR-LETHAL	FEED GAS, HC CONDENSATE	SOUR + LETHAL SERVICE	Note 11	CS	CL 600 RF	102.1/90.2	-29	150	15- 600	-	100	100	-	-	5 / 100	
								75	-29	150	650-1200							
14	CE3L0D-FA	HYDROCARBON-SOUR-LETHAL	HC CONDENSATE, FEED GAS	SOUR + LETHAL SERVICE	Note 11	LTCS+CLAD 825	CL 600 RF	102.1/90.2	-46	150	15 - 100 150 - 600	100	-	100	100	-	5 / 100	
15	CG1A1A-FH	HP STEAM	HP SUPERHEATED STEAM	NON SOUR	As Per ASME B31.3	1 1/4CR - 1/2MO P11	CL 600 RF	103.4/67.7	-29	450	15 - 600	-	10	10	-	-	-	
16	CL1L3D-FA	HYDROCARBON-SOUR-LETHAL	FEED GAS	SOUR + LETHAL SERVICE	Note 11	LTCS	CL 600 RF	102.1/89.4	-46	165	15 - 600	-	100	100	-	-	5 / 100	
								84	-46	110	650- 900							
EXISTING AGES PIPE CLASSES																		
17	AC1A1B-FA	GENERAL UTILITIES, NON SOUR HYDROCARBONS	NITROGEN, LP FUEL GAS, BOILER FEED WATER, COOLING WATER, CONDENSATE POLISHING	NON SOUR	As Per ASME B31.3	CS	CL 150 RF	19.6/15.8	-29	150	15-1200	-	5	5	-	-	-	
18	AC1A1B-FH	LP STEAM	LP STEAM, LP STEAM CONDENSATE,BOILER BLOWDOWN	NON SOUR	As Per ASME B31.3	CS	CL 150 RF	19.6/5.4	-29	427	15 - 1500	-	10	10	-	-	-	
19	AC1A6H-FA	SULPHURIC ACID	SULPHURIC ACID	NON SOUR	As Per ASME B31.3	CS	CL 150 RF	19.6/17.7	4	100	15 - 200	-	10	10	-	-	-	
20	AS1A0A-FA	POTABLE WATER, DM WATER, CHEMICAL INJECTION	POTABLE WATER (ABOVE GROUND), DM WATER, CORROSION INHIBITOR, CHEMICAL DOSING	NON SOUR	As Per ASME B31.3	SS 316 /316L	CL 150 RF	19.0/14.8	-29	150	15 - 600	5	-	5	-	-	-	
21	AS1A0A-FC	LIQUID NITROGEN, NON SOUR HYDROCARBONS-CRYOGENIC	LIQUID NITROGEN, CLOSED DRAIN CRYOGENIC	NON SOUR	As Per ASME B31.3	SS 316 /316L	CL 150 RF	19.0/14.8	-196	150	15 - 600	5	-	5	-	-	-	
22	BC1A1B-FA	HYDROCARBON-NON SOUR	MP FUEL GAS, FUEL GAS BLOWDOWN	NON SOUR	As Per ASME B31.3	CS	CL 300 RF	51.1/45.1	-29	150	15-1200	-	100	100	-	-	-	

SL_No	Piping Class	Fluid Service	Service Condition			Basic Material	ASME Class	Design Condition			Size Range	Minimum Extent of NDE (%)						Remarks
			Fluid Description	Special Requirements	PWHT			Pressure Max/Min Barg	Min Temp. Deg C	Max. Temp. Deg C	DN	DPT	MT	RT / UT (Note-3, 4, 5)	PMI	Ferrite Test	HARDNESS (Note-24)	
23	BC1A1B-FH	STEAM CONDENSATE	STEAM CONDENSATE	NON SOUR	As Per ASME B31.3	CS	CL 300 RF	51.1/28.3	-29	427	15 - 1200	-	10	10	-	-	-	
24	CC1A1B-FA	BOILER FEED WATER	BOILER FEED WATER	NON SOUR	As Per ASME B31.3	CS	CL 600 RF	102.1/90.2	-29	150	15 - 1200	-	10	10	-	-	-	
25	CS1A0A-FA	SCALE INHIBITOR	BOILER SCALE INHIBITOR DOSING	NON SOUR	As Per ASME B31.3	SS 316 /316L	CL 600 RF	99.3/77.0	-29	150	15 - 600	100	-	100	-	-	-	
PIPE CLASSES UNDER HOLD																		
26	AC1H3A-FA	HYDROCARBON-SOUR	LEAN SOLVENT (LEAN AMINE)	SOUR	Yes	CS	CL 150 RF	19.6/15.8	-29	150	15-900	-	100	100	-	-	5 / 100	PIPE CLASS ON HOLD
27	AC1L3D-FH	HYDROCARBON-SOUR-LETHAL	FLARE	SOUR + LETHAL SERVICE	Note 11	CS	CL 150 RF	19.6/15.8	-29	250	15-600	-	100	100	-	-	5 / 100	PIPE CLASS ON HOLD
28	AE1L0D-FA	HYDROCARBON-SOUR-LETHAL	HC CONDENSATE, SOUR WATER, ACID GAS	SOUR + LETHAL SERVICE	Note 11	CS + Clad 825	CL 150 RF	19.6/15.8	-29	150	15 - 100 150 - 600	100		100	100	-	5 / 100	PIPE CLASS ON HOLD
29	AL1A1A-FA	HYDROCARBON-NON SOUR	FLARE	NON SOUR	As Per ASME B31.3	LTCS	CL 150 RF	19.6/15.8	-46	150	15-600	-	100	100	-	-	-	PIPE CLASS ON HOLD
30	AF3A0I-FA	CHLORINATION DOSING	CHLORINATION DOSING	NON SOUR	As Per ASME B31.3	CS + PTFE	CL 150 FF	HOLD	HOLD	HOLD	HOLD	-	10	10	-	-	-	PIPE CLASS ON HOLD
31	AP3A0F-FA	FIRE WATER	FIRE WATER	NON SOUR	NA	GRE	150# FF	16	0	85	25 - 600	-	-	-	-	-	-	PIPE CLASS ON HOLD
32	AS1L0A-FB	HYDROCARBON-SOUR-LETHAL	COLD FLARE	SOUR + LETHAL SERVICE	Note 11	SS 316 /316L	CL 150 RF	19.0/14.8	-196	250	15 - 600	100	-	100	100	100	5 / 100	PIPE CLASS ON HOLD
33	AS1S0A-FC	HYDROCARBON-SOUR	CLOSED DRAIN CRYOGENIC	SOUR	Note 11	SS 316 /316L	CL 150 RF	19.0/14.8	-196	150	15 - 600	100	-	100	100	100	5 / 100	PIPE CLASS ON HOLD
34	AS3H0X-FA	HYDROCARBON-SOUR	LEAN SOLVENT (LEAN AMINE)	SOUR	Yes	6MO	CL 150 RF	20.0/15.8	-29	160	15 - 600	100	-	100	100	100	5 / 100	PIPE CLASS ON HOLD
35	AS3T0X-FA	HYDROCARBON-SOUR-LETHAL	RICH SOLVENT, SOUR (RICH AMINE)	SOUR + LETHAL SERVICE	Yes	6MO	CL 150 RF	20.0/15.8	-29	150	15 - 600	100	-	100	100	100	5 / 100	PIPE CLASS ON HOLD
36	BS1A0A-FA	CHEMICAL INJECTION	CORROSION INHIBITOR, METHANOL	NON SOUR	As Per ASME B31.3	SS 316 /316L	CL 300 RF	49.6/38.5	-29	150	15-600	10	-	10	-	-	-	PIPE CLASS ON HOLD
37	CC1A1A-FA	HYDROCARBON-NON SOUR	METHANOL	NON SOUR	As Per ASME B31.3	CS	CL 600 RF	102.1/90.2	-29	150	15 - 600	-	10	10	-	-	-	PIPE CLASS ON HOLD
38	CC1A3A-FA	HYDROCARBON-NON SOUR	COLD WET GAS, HOT WET GAS	NON SOUR	As Per ASME B31.3	CS	CL 600 RF	102.1/90.2	-29	150	15 - 600	-	100	100	-	-	-	PIPE CLASS ON HOLD
39	CC1H3A-FA	HYDROCARBON-SOUR	LEAN SOLVENT (LEAN AMINE)	SOUR	Yes	CS	CL 600 RF	102.1/90.2	-29	150	15 - 600	-	100	100	-	-	5 / 100	PIPE CLASS ON HOLD
40	CE1L0D-FA	HYDROCARBON-SOUR-LETHAL	SOUR WATER, SOUR GAS	SOUR + LETHAL SERVICE	Note 11	CS + Clad 825	CL 600 RF	102.1/90.2	-29	150	15 - 100 150 - 900	100	-	100	100	-	5 / 100	PIPE CLASS ON HOLD
41	CL1A1A-FA	HYDROCARBON-NON SOUR	COLD FLARE, HYDROCARBON	NON SOUR	As Per ASME B31.3	LTCS	CL 600 RF	102.1/90.2	-46	150	15 - 600	-	100	100	-	-	-	PIPE CLASS ON HOLD
42	CS1A0A-FC	HYDROCARBON-NON SOUR	RESEDUE GAS, HC CONDENSATE, COLD FLARE	NON SOUR	As Per ASME B31.3	SS 316 /316L	CL 600 RF	99.3/77.0	-196	150	15 - 600	100	-	100	-	-	-	PIPE CLASS ON HOLD
43	DL1S1A-FA	HYDROCARBON-SOUR	NATURAL GAS LIQUID	SOUR	Note 11	LTCS	CL 900 RF	153.2/135.2	-46	150	15-600	-	100	100	-	-	5 / 100	PIPE CLASS ON HOLD
44	EC1L3A-JA	HYDROCARBON-SOUR-LETHAL	FEED GAS, HC CONDENSATE	SOUR + LETHAL SERVICE	Note 11	CS	CL 1500 RTJ	255.3/225.4	-29	150	15-750	-	100	100	-	-	5 / 100	PIPE CLASS ON HOLD

EPC CONTRACTOR shall update the table if any additional Piping classes / Rating added in the PMS. Updated document shall be submitted to COMPANY for approval.

Notes:	
1	All the Welds shall be 100% visually inspected and recorded.
2	NDE requirement has been provided based on the material and pipe class and will be further updated based on engineering development by process.

SL_No	Piping Class	Fluid Service	Service Condition			Basic Material	ASME Class	Design Condition			Size Range	Minimum Extent of NDE (%)						Remarks
			Fluid Description	Special Requirements	PWHT			Pressure Max/Min Barg	Min Temp. Deg C	Max. Temp. Deg C	DN	DPT	MT	RT / UT (Note-3, 4, 5)	PMI	Ferrite Test	HARDNESS (Note-24)	
	3	The radiography requirements are applicable to butt-welds, branch connection welds suitable for radiography. If branch connection cannot be radiographed, then MT or Liquid penetrant examination shall be performed at the same time percentage as required for radiography for that service. For Socket welds, the first 10 production welds shall be examined by radiography and on subsequent welds (during construction) 5% or 10% radiography as mentioned in above table shall be carried out on random basis. In Lieu of RT, the EPC CONTRACTOR may propose other technologies like Gap-O-Let, water-soluble spacer rings with 100% socket weld joints etc. in order to ensure the gap as specified in ASME B31.3 for COMPANY Approval. For Sour service: - UT shall be used when RT is impractical. - For P No.1 and P No.4 piping of thickness 40 mm and above, 100% ultrasonic examination shall be required on butt welds in addition to the specified radiography examination.															
	4	PAUT examination may be applied if the configuration precludes radiography.																
	5	The indicated percentage of welds to be radiographed shall represent welds made by each welder's and welding operator's work, including the small-bore nipples.																
	6	Small-bore nipples to be included (Socket welds for Non sour service and butt welded for Sour service).																
	7	For X-ray-fine grain may be used, e.g., Agfa D7, Kodak Industries AX. For Gamma-ray ultra-fine grain film shall be used, e.g., Agfa D4, Kodak Industries MX.																
	8	MT - Magnetic Particle Inspection. In addition to buttwelds, Fillet welds shall be subject to MT (Magnetic Particle Examination) / Liquid penetrant examination at the same percentage as for the radiography of butt welds. For jacketed piping, 10% of the circumferential and 100% of the longitudinal welds shall be examined by radiography.																
	9	The buried pipe shall be externally protected in accordance with Addendum to AGES-SP-07-001 Painting and Coating Specification (Doc. No. 30201_50150_LT_HE-ADD-SP-07-004 and Addendum to AGES-SP-07-001 Cathodic Protection Specification (Doc. No. 30201_50150_LT_HE-ADD-SP-07-001).																
	10	EPC CONTRACTOR shall submit NDT MAP covering the piping class, Rating, Type of Joint, Material, service type, fluid type and % of NDT including % hardness, Ferrite testing, PMI etc.																
	11	PWHT of piping systems for Sour Service shall be as specified below: Process Piping and Pipe Fittings: In a sour service / wet H_2S service environment, PWHT is mandatory for the following cases: a) Double sided welding, i.e., flange girth welds. b) Internal weld repair. c) Internal weld build-up for dissimilar thickness joints to overcome misalignment. The applicable industry must be followed for PWHT requirement for any service not listed above. Other process conditions may also require PWHT, as determined during the project design. Code exemptions for PWHT are not permitted if PWHT is specified for process conditions. For piping components, PWHT is exempted if: a) Weld thickness is more than 5mm and ≤ 19 mm. b) Weld is not made from inside. c) Hardness values are in conformance to the requirement of NACE MR0175 / ISO 15156 -2. d) Weldment is multi-pass welds. e) PWHT is not specified by design code. PWHT is mandatory: f) If not meeting any of the above requirements from a to e, however since PWHT is an essential variable, a qualified weld procedure based on PWHT shall be required to be approved by COMPANY. g) Where production hardness values are not met; or where, h) PWHT is specified by Licensor.																
	12	P - T Design parameters shall be as per Pipe class P - T for sizes up to 24" and for size above 24" pressure temperature as per Process Line Design conditions.																
	13	PWHT for the non-Sour service,the Addendum to AGES-SP-07-007 Welding & Non Destructive Examination (NDE) (Dof. No. 30201_50150_LT_HE-ADD-SP-07-007) shall be followed.																
	14	The extent of random examination specified in the above table is based on qualified welding inspectors being actively present on the worksites and independent audits being carried out by the CONTRACTOR. If this is not the case, additional NDE shall be applied at the discretion of the COMPANY.																
	15	The NDE company responsible for the final examination of welds shall maintain a quality system in accordance with ISO / IEC 17020, or equivalent as agreed with the COMPANY, and be accredited by a nationally recognized body.																
	16	EPC CONTRACTOR shall prepare a procedure specifying minimum requirements for the qualification of NDT, for types of equipment, and for types of NDT used and subject the procedure for review and approval of the COMPANY.																
	17	The causes for each identified defect shall be immediately investigated and corrective action shall be taken to prevent further occurrences. - The defects should be reported with reference to the numbering system according to ISO 6520-1.																
	18	The requirement for examination of 5% or 10% of the welds means that 10% of the production welds shall be randomly and independently selected throughout the fabrication period and fully examined. -The random selection shall be equally distributed over all welders and all type of welds, which includes welding procedure, Piping class, Fluid service, pipe size, and thickness.																
	19	In addition to the 5% or 10% examination requirement, the following inspection shall be carried out for each welder: - The first five production welds made by each welder shall be examined, before that welder performs any further welding. - If progressive examination of a welder's work is required on the basis of ASME B31.3, the follow up examinations shall first be made on welds made by the same welding procedure as used to make the defective weld. - If the weld reject ratio per welder or welding operator exceeds 5% RT shall be increased to 10% and stay at 100% until the reject rate per welder or welding operator drops below 5% and remains below 5% for another 14-consecutive working days. - If any welder or welding operator who consistently fails to meet the standard shall be required to undergo re-training, re-testing or shall be removed from the job completely.																
	20	In case any defective weld joint is repaired or replaced, and re-examined, progressive sampling shall be followed in accordance with section 341.3.4(f) of ASME B31.3.																
	21	EPC CONTRACTOR shall propose weld repair or re-work numbering system including the cut and re-weld, shop joint modification, filed joint modification, weld repair R1, R2, R3 etc.																
	22	For piping systems build in accordance with ASME B31.3, radiographic acceptance criteria shall be as per the following: - 100% radiography means 100% radiography requirements in accordance with ASME B31.3, para 344.5.2. - 10% radiography means random radiography requirements in accordance with ASME B31.3, para 344.5.2. - For linear indications, acceptance in accordance with ASME B31.3, para 341.3.2. - For rounded indications, acceptance in accordance with ASME B31.3, para 341.3.2.																
	23	EPC CONTRACTOR to submit Trend analysis for weld repairs arise from any NDE examination and submit to COMPANY on weekly basis.																
	24	For piping in general service, requiring PWHT, production hardness tests are required for P- No.1 and P-No.3 through P-No.6 materials, on 10% of welds in each furnace heat-treated batch OR 100% of those, which are locally heat-treated. For piping in sour service, production hardness tests are required for all weld types and material, on 5% of welds in each furnace heat-treated batch, OR 100% of those locally PWHT and non-PWHT welds. Hardness checks shall also be made on every weld repair for both general and sour service.																

APPENDIX-01 MINIMUM EXTENT OF NDE FOR PIPING (ONSITE NON PIGGABLE PIPING - AT PIG TRAP STATIONS)

SL_No	Piping Class	Fluid Service	Service Condition		Basic Material	ASME Class	Design Condition			Size Range	Minimum Extent of NDE (%)						Remarks
			Special Requirements	PWHT			Pressure Max Barg	Min Temp. Deg C	Max. Temp. Deg C	DN	DPT	MT	RT / UT (Note-3, 4, 5)	PMI	Ferrite Test	HARDNESS (Note-24)	
1	11010G	Common as applicable	Sour	Note 11	CS	CL 150	17.3/19.6	-29	110	50-900	-	100	100	-	-	5 / 100	
2	31010G	24" Asab LP Gas and 36" Buhasa LP Gas Diversion Pipelines	Sour	Note 11	CS	CL300	46/51.1	-29	120	50-1200	-	100	100	-	-	5 / 100	
3	11020G	For dead legs in ASME CL 150 Pipeline/ Piping system	Sour	Note 11	CS	CL 150	17.3/19.6	-29	110	50-600	-	100	100	-	-	5 / 100	
4	31020G	42" Habshan Th- B HP Gas and 28" Bu Hasa HP Gas Pipelines	Sour	Note 11	CS	CL300	46.3/51.1	-29	110	50-1050	-	100	100	-	-	5 / 100	
5	61030G	For dead legs in ASME CL 600 Pipeline/ Piping system	Sour	Note 11	CS	CL600	92.6/102.1	-29	110	50-600	-	100	100	-	-	5 / 100	
6	61040G	10" Asab Diversion Gas Pipeline	Sour	Note 11	Size < 6": SS316L Size > 6": CS + 3mm SS 316L Cladding	CL600	92.6/102.1	-29	110	50-400	100	-	100	100	100	5 / 100	
7	61050G	48" Habshan Offshore HP Gas Pipeline	Sour	Note 11	CS	CL600	92.6/102.1	-29	110	50-1200	-	100	100	-	-	5 / 100	

EPC CONTRACTOR shall update the table if any additional Piping classes / Rating added in the PMS. Updated document shall be submitted to COMPANY for approval.

Notes:	
1	All the Welds shall be 100% visually inspected and recorded.
2	NDE requirement has been provided based on the material and pipe class and will be further updated based on engineering development by process.
3	The radiography requirements are applicable to butt-welds, branch connection welds suitable for radiography. If branch connection cannot be radiographed, then MT or Liquid penetrant examination shall be performed at the same time percentage as required for radiography for that service. For Socket welds, the first 10 production welds shall be examined by radiography and on subsequent welds (during construction) 5% or 10% radiography as mentioned in above table shall be carried out on random basis. In Lieu of RT, the EPC CONTRACTOR may propose other technologies like Gap-O-Let, water-soluble spacer rings with 100% socket weld joints etc. in order to ensure the gap as specified in ASME B31.3 for COMPANY Approval. For Sour service: - UT shall be used when RT is impractical. - For P No.1 and P No.4 piping of thickness 40 mm and above, 100% ultrasonic examination shall be required on butt welds in addition to the specified radiography examination.
4	PAUT examination may be applied if the configuration precludes radiography.
5	The indicated percentage of welds to be radiographed shall represent welds made by each welder's and welding operator's work, including the small-bore nipples.
6	Small-bore nipples to be included (Socket welds for Non sour service and butt welded for Sour service).
7	For X-ray-fine grain may be used, e.g., Agfa D7, Kodak Industries AX. For Gamma-ray ultra-fine grain film shall be used, e.g., Agfa D4, Kodak Industries MX.
8	MT - Magnetic Particle Inspection. In addition to buttwelds, Fillet welds shall be subject to MT (Magnetic Particle Examination) / Liquid penetrant examination at the same percentage as for the radiography of butt welds. For jacketed piping, 10% of the circumferential and 100% of the longitudinal welds shall be examined by radiography.
9	The buried pipe shall be externally protected in accordance with Addendum to AGES-SP-07-001 Painting and Coating Specification (Doc. No. 30201_50150_LT_HE-ADD-SP-07-004 and Addendum to AGES-SP-07-001 Cathodic Protection Specification (Doc. No. 30201_50150_LT_HE-ADD-SP-07-001).
10	EPC CONTRACTOR shall submit NDT MAP covering the piping class, Rating, Type of Joint, Material, service type, fluid type and % of NDT including % hardness, Ferrite testing, PMI etc.
11	PWHT of piping systems for Sour Service shall be as specified below: Process Piping and Pipe Fittings: In a sour service / wet H_2S service environment, PWHT is mandatory for the following cases: a) Double sided welding, i.e., flange girth welds. b) Internal weld repair. c) Internal weld build-up for dissimilar thickness joints to overcome misalignment. The applicable industry must be followed for PWHT requirement for any service not listed above. Other process conditions may also require PWHT, as determined during the project design. Code exemptions for PWHT are not permitted if PWHT is specified for process conditions. For piping components, PWHT is exempted if: a) Weld thickness is more than 5mm and ≤ 19 mm. b) Weld is not made from inside. c) Hardness values are in conformance to the requirement of NACE MR0175 / ISO 15156 -2. d) Weldment is multi-pass welds. e) PWHT is not specified by design code. PWHT is mandatory: f) If not meeting any of the above requirements from a to e, however since PWHT is an essential variable, a qualified weld procedure based on PWHT shall be required to be approved by COMPANY. g) Where production hardness values are not met; or where, h) PWHT is specified by Licensor.
12	P - T Design parameters shall be as per Pipe class P - T for sizes up to 24" and for size above 24" pressure temperature as per Process Line Design conditions.
13	PWHT for the non-Sour service,the Addendum to AGES-SP-07-007 Welding & Non Destructive Examination (NDE) (Dof. No. 30201_50150_LT_HE-ADD-SP-07-007) shall be followed.
14	The extent of random examination specified in the above table is based on qualified welding inspectors being actively present on the worksites and independent audits being carried out by the CONTRACTOR. If this is not the case, additional NDE shall be applied at the discretion of the COMPANY.
15	The NDE company responsible for the final examination of welds shall maintain a quality system in accordance with ISO / IEC 17020, or equivalent as agreed with the COMPANY, and be accredited by a nationally recognized body.
16	EPC CONTRACTOR shall prepare a procedure specifying minimum requirements for the qualification of NDT, for types of equipment, and for types of NDT used and subject the procedure for review and approval of the COMPANY.
17	The causes for each identified defect shall be immediately investigated and corrective action shall be taken to prevent further occurrences. - The defects should be reported with reference to the numbering system according to ISO 6520-1.
18	The requirement for examination of 5% or 10% of the welds means that 10% of the production welds shall be randomly and independently selected throughout the fabrication period and fully examined. -The random selection shall be equally distributed over all welders and all type of welds, which includes welding procedure, Piping class, Fluid service, pipe size, and thickness.
19	In addition to the 5% or 10% examination requirement, the following inspection shall be carried out for each welder: - The first five production welds made by each welder shall be examined, before that welder performs any further welding. - If progressive examination of a welder's work is required on the basis of ASME B31.3, the follow up examinations shall first be made on welds made by the same welding procedure as used to make the defective weld. - If the weld reject ratio per welder or welding operator exceeds 5% RT shall be increased to 10% and stay at 100% until the reject rate per welder or welding operator drops below 5% and remains below 5% for another 14-consecutive working days. - If any welder or welding operator who consistently fails to meet the standard shall be required to undergo re-training, re-testing or shall be removed from the job completely.
20	In case any defective weld joint is repaired or replaced, and re-examined, progressive sampling shall be followed in accordance with section 341.3.4(f) of ASME B31.3.
21	EPC CONTRACTOR shall propose weld repair or re-work numbering system including the cut and re-weld, shop joint modification, filed joint modification, weld repair R1, R2, R3 etc.
22	For piping systems build in accordance with ASME B31.3, radiographic acceptance criteria shall be as per the following: - 100% radiography means 100% radiography requirements in accordance with ASME B31.3, para 344.5.2. - 10% radiography means random radiography requirements in accordance with ASME B31.3, para 344.5.2. - For linear indications, acceptance in accordance with ASME B31.3, para 341.3.2. - For rounded indications, acceptance in accordance with ASME B31.3, para 341.3.2.
23	EPC CONTRACTOR to submit Trend analysis for weld repairs arise from any NDE examination and submit to COMPANY on weekly basis.
24	For piping in general service, requiring PWHT, production hardness tests are required for P- No.1 and P-No.3 through P-No.6 materials, on 10% of welds in each furnace heat-treated batch OR 100% of those, which are locally heat-treated. For piping in sour service, production hardness tests are required for all weld types and material, on 5% of welds in each furnace heat-treated batch, OR 100% of those locally PWHT and non-PWHT welds. Hardness checks shall also be made on every weld repair for both general and sour service.

APPENDIX-02 AGES-SP-07-007

THE CONTENTS OF THIS DOCUMENT ARE PROPRIETARY AND CONFIDENTIAL.

أدنوك
ADNOC

ADNOC GROUP PROJECTS AND ENGINEERING

WELDING & NON DESTRUCTIVE EXAMINATION (NDE)

Specification

APPROVED BY:

13/04/2022

NAME: Abdulmunim Al Kindy
TITLE: Executive Director PT&CS
EFFECTIVE DATE:

AGES-SP-07-007

ص ب 898، أبوظبي، الإمارات العربية المتحدة
PO Box 898, Abu Dhabi, UAE
adnoc.ae

شركة بترول أبوظبي الوطنية
Abu Dhabi National Oil Company

All parties consent to this document being signed electronically -PT&CS/GP/INT/2022/5777

GROUP PROJECTS & ENGINEERING / PT&CS DIRECTORATE

CUSTODIAN	Group Projects & Engineering / PT&CS
ADNOC	Specification applicable to ADNOC & ADNOC Group Companies

REVISION HISTORY

DATE	REV. NO	PREPARED BY (Designation / Initial)	REVIEWED BY (Designation / Initial)	ENDORSED BY (Designation / Initial)	ENDORSED BY (Designation / Initial)
30-Mar-2022	1	Hesham Ahmed ElAshkar Senior Specialist, Material Engineering	Mahmoud Abdel Hakim / HOD Pipeline Engineering Reuben Yagambaram/ SPM GPE	Najem Qambar / VP/ Group Engineering 12/04/2022 Ali Al Breiki/ VP Upstream Projects 12/04/2022	Ebraheem Al Romaithi / SVP-GPE 13/04/2022

Group Projects & Engineering is the owner of this Specification and responsible for its custody, maintenance and periodic update.

In addition, Group Projects & Engineering is responsible for communication and distribution of any changes to this Specification and its version control.

All parties consent to this document being signed electronically -PT&CS/GP/INT/2022/5777

INTER-RELATIONSHIPS AND STAKEHOLDERS

The following are inter-relationships for implementation of this Philosophy:

ADNOC Upstream and ADNOC Downstream Industry, Marketing & Trading Directorate.

ADNOC Onshore, ADNOC Offshore, ADNOC Sour Gas, ADNOC Gas Processing. ADNOC LNG, ADNOC Refining, Fertil, Borouge, Al Dhafra Petroleum, Al Yasat

The following are stakeholders for the purpose of this Specification:

ADNOC PT&CS Directorate

This Specification has been approved by the ADNOC PT&CS is to be implemented by each ADNOC Group company included above subject to and in accordance with their Delegation of Authority and other governance-related processes in order to ensure compliance.

Each ADNOC Group company must establish/nominate a Technical Authority responsible for compliance with this Specification.

DEFINITIONS

"**ADNOC**" means Abu Dhabi National Oil Company.

"**ADNOC Group**" means ADNOC together with each company in which ADNOC, directly or indirectly, controls fifty percent (50%) or more of the share capital.

"**Approving Authority**" means the decision-making body or employee with the required authority to approve Policies & Procedures or any changes to it.

"**Business Line Directorates**" or "**BLD**" means a directorate of ADNOC which is responsible for one or more Group Companies reporting to, or operating within the same line of business as, such directorate.

"**Business Support Directorates and Functions**" or "**Non- BLD**" means all the ADNOC functions and the remaining directorates, which are not ADNOC Business Line Directorates.

"**CEO**" means chief executive officer.

"**Group Company**" means any company within the ADNOC Group other than ADNOC.

"Specification" means this Chemical Treatment and Corrosion Monitoring System Specification.

CONTROLLED INTRANET COPY

The intranet copy of this document located in the section under Group Policies on One ADNOC is the only controlled document. Copies or extracts of this document, which have been downloaded from the intranet, are uncontrolled copies and cannot be guaranteed to be the latest version.

All parties consent to this document being signed electronically -PT&CS/GP/INT/2022/5777

TABLE OF CONTENTS

1 GENERAL 7
1.1 INTRODUCTION 7
1.2 PURPOSE 7
1.3 DEFINITIONS AND ABBREVIATIONS 7
SECTION A – GENERAL 13
2 REFERENCE DOCUMENTS 13
2.1 INTERNATIONAL CODES AND STANDARDS 13
2.2 ADNOC SPECIFICATIONS 15
3 DOCUMENT PRECEDENCE 17
4 SPECIFICATION DEVIATION / CONCESSION CONTROL 17
5 QUALITY ASSURANCE/QUALITY CONTROL 18
SECTION B 19
B0-1 INTRODUCTION 19
B1 SECTION B (PART 1) – WELDING AND NDE - GENERAL 20
B1-1 DOCUMENTATION 20
B1-2 QUALIFICATIONS 23
B1-3 WELDING PROCESSES, WELDING CONSUMABLES, WELDING OF MATERIALS 25
B1-4 FABRICATION 36
B1-5 NDE AND TESTING 42
B2 SECTION B (PART 2) – WELDING AND NDE OF PIPING SYSTEMS 46
B2-1 DOCUMENTATION 46
B2-2 QUALIFICATION 46
B2-3 WELDING PROCESSES, WELDING CONSUMABLES, WELDING OF MATERIALS 46
B2-4 FABRICATION 46
B2-5 NDE AND TESTING 47
B3 SECTION B (PART 3) – WELDING AND NDE OF PRESSURE VESSEL AND HEAT EXCHANGERS 51
B3-1 DOCUMENTATION 51
B3-2 QUALIFICATION 51
B3-3 WELDING PROCESSES, WELDING CONSUMABLES, WELDING OF MATERIALS 51
B3-4 FABRICATION 51
B3-5 NDE AND TESTING 52
B4 SECTION B (PART 4) – WELDING & NDE OF STORAGE TANKS 54
B4-1 DOCUMENTATION 54

All parties consent to this document being signed electronically -PT&CS/GP/INT/2022/5777

B4-2 QUALIFICATION 54
B4-3 WELDING PROCESSES, WELDING CONSUMABLES, WELDING OF MATERIALS 54
B4-4 FABRICATION 55
B4-5 NDE AND TESTING 58
SECTION E 60
E1 APPENDIX E1– WELDING & NDE REQUIREMENTS FOR WELD OVERLAY 60
E2 APPENDIX E2 – WELDING & NDE REQUIREMENTS FOR CR-MO / CR-MO-V STEEL IN HIGH TEMPERATURE, HIGH PRESSURE HYDROGEN SERVICE 66
E3 APPENDIX E3 – WELDING & NDE REQUIREMENTS FOR SEVERE SERVICE 76

All parties consent to this document being signed electronically -PT&CS/GP/INT/2022/5777

LIST OF TABLES

TABLE 1.1 LIST OF ABBREVIATIONS....8
TABLE B1.1 ACCEPTABLE WELDING PROCESSES:....25
TABLE B1.2 LIST OF ACCEPTABLE HEAT INPUT AND INTERPASS TEMPERATURE....27
TABLE B1.3 MINIMUM REQUIRED PREHEAT TEMPERATURES....38
TABLE B2.4 MINIMUM EXTENT OF NDE....48
TABLE E1.5 ACCEPTABLE FILER METALS....61
TABLE E2.6 CHEMICAL COMPOSITION LIMITS FOR CR-MO STEEL WELD CONSUMABLES....67
TABLE E2.7 PWHT HOLDING TEMPERATURE AND TIME....72
TABLE E3.8 PRODUCTION WELD HARDNESS TESTING FREQUENCY REQUIREMENTS....80
TABLE E3.9 NDE COVERAGE FOR PRESSURE CONTAINMENT CS WELDS....80
TABLE E3.10 NDE COVERAGE FOR PRESSURE CONTAINMENT SS / CRA WELDS....83

LIST OF FIGURES

FIGURE B1.1 SPECIMENS AND NOTCH DETAIL PER ASTM A370....24
FIGURE B1.2 LOCATION OF PARTIAL PENETRATION WELD REPAIRS....42
FIGURE E1.3 CLADDING CUTBACK....62
FIGURE E1.4 CLADDING RESTORATION PENETRATION....63
FIGURE E2.5 HARDNESS SURVEY OF WELD JOINT....69
FIGURE E2.6 WELD OVERLAY CHEMICAL ANALYSIS....70

All parties consent to this document being signed electronically -PT&CS/GP/INT/2022/5777

1 GENERAL

1.1 Introduction

This Specification describes the welding and NDE requirements for existing and new facilities including piping, storage tanks, pressure vessels and heat exchangers. This document is a general specification that is applicable to COMPANY'S Onshore and Offshore production, Gas Processing, Petrochemical and Refining facilities.

This specification is divided under section B into 4 technical requirements parts as follows:

- Section B (Part 1) - Welding & NDE - General
- Section B (Part 2) - Welding & NDE of Piping System
- Section B (Part 3) - Welding & NDE of Pressure Vessels and Heat Exchangers
- Section B (Part 4) - Welding & NDE of Storage Tanks

For details of Welding and NDE for structural steelwork refer to AGES-SP-01-002

Supplementary sections of this specification are as follows:

- Appendix E1 - Welding & NDE Requirements For Weld Overlay
- Appendix E2 – Welding & NDE Requirements For Cr-Mo / Cr-Mo-V Steel In High Temperature, High Pressure Hydrogen Service
- Appendix E3 – Welding & NDE Requirements For Severe Service

1.2 Purpose

The purpose of this Specification is to define welding requirements for upstream and downstream oil, gas, and petrochemical processes. The requirements of this Specification are intended to define welding requirements for integrity management, minimise production problems, reduce production costs, meet plant performance targets, achieve export specifications, protect piping and equipment, and assist in preventing loss of containment.

1.3 Definitions and Abbreviations

The following defined terms are used throughout this Specification:

"**COMPANY**" means ADNOC, ADNOC Group or an ADNOC Group Company, and includes any agent or consultant authorized to act for, and on behalf of the COMPANY.

"**CONTRACTOR**" means the parties that carry out all or part of the design, engineering, procurement, construction, commissioning or management for ADNOC projects. CONTRACTOR includes its approved MANUFACTURER(s), SUPPLIER(s), SUB-SUPPLIER(s) and SUB-CONTRACTOR(s).

"**MANUFACTURER**" means the Original Equipment Manufacturer (OEM) or MANUFACTURER of one or more of the component(s) which make up a sub-assembly or item of equipment assembled by the main SUPPLIER or his nominated SUB-SUPPLIER.

'may' means a permitted option

'shall' indicates mandatory requirements

'should' means a recommendation

"**SUB-CONTRACTOR**" means any party engaged by the CONTRACTOR to undertake any assigned work on their behalf. COMPANY maintains the right to review all proposed SUB-CONTRACTORs; this

All parties consent to this document being signed electronically -PT&CS/GP/INT/2022/5777

right does not relieve the CONTRACTOR of their obligations under the Contract, nor does it create any contractual relationship between COMPANY and the SUB-CONTRACTOR.

"SUPPLIER" means the party entering into a Contract with COMPANY to provide the materials, equipment, supporting technical documents and/or drawings, guarantees, warranties and/or agreed services in accordance with the requirements of the purchase order and relevant specification(s). The term SUPPLIER includes any legally appointed successors and/or nominated representatives of the SUPPLIER.

"**SUB-SUPPLIER**" means the sub-contracted SUPPLIER of equipment sub-components software and/or support services relating to the equipment / package, or part thereof, to be provided by the SUPPLIER. COMPANY maintains the right to review all proposed SUB-SUPPLIERS, but this right does not relieve the SUPPLIER of their obligations under the Contract, nor does it create any contractual relationship between COMPANY and any individual SUB-SUPPLIER.

The abbreviations used throughout this Specification are shown in Table 1.1.

Table 1.1 List of Abbreviations

Abbreviations	
AC	Alternating Current
ACSCC	Alkaline Carbonate Stress Corrosion Cracking
ANSI	American National Standards Institute
API	American Petroleum Institute
ASME	American Society Of Mechanical Engineers
ASNT	American Society For Nondestructive Testing
ASS	Austenitic Stainless Steel
ASTM	American Society For Testing And Material
AUT	Automatic Ultrasonic Testing
AWS	American Welding Society
BPVC	Boiler and Pressure Vessel Code
BSI	British Standards Institute
CE / CEV	Carbon Equivalent / Value
cm	Centimetre
CMTR	Certified Material Test Report

All parties consent to this document being signed electronically -PT&CS/GP/INT/2022/5777

Abbreviations	
CRA	Corrosion Resistant Alloy
CS	Carbon Steel
CVN	Charpy V-Notch
DCEN	Direct Current Electrode Negative
DHT	Dehydrogenation Heat Treatment
DIN	Deutsches Institut Für Normung
DPI	Dye Penetrant Inspection
DNV	Det Norske Veritas
DSS	Duplex Stainless Steel
EMR	Extra Moisture Resistant
ESW	Electro Slag Welding
FBH	Flat Bottom Hole
FCAW	Flux Cored Arc Welding
FEED	Front End Engineering and Design
FN	Ferrite Number
GMAW	Gas Metal Arc Welding
GTAW	Gas Tungsten Arc Welding
H_2	Hydrogen
H_2S	Hydrogen Sulfide
HAZ	Heat Affected Zone
HBW	Hardness Brinell
HIC	Hydrogen Induced Cracking
HSE	Health, Safety & Environment

All parties consent to this document being signed electronically -PT&CS/GP/INT/2022/5777

Abbreviations	
HTHA	High Temperature Hydrogen Attack
HV	Hardness Vickers
ID	Internal Diameter
ISO	International Organization For Standardization
ISR	Intermediate Stress Relief
ITP	Inspection and Test Plan
KV	Kilovolt
LNG	Liquified Natural Gas
m	Metre
m/s	Metres Per Second
MDMT	Minimum Design Metal Temperature
mm	Millimetre
mm/y	Millimetre Per Year
MPI	Magnetic Particle Inspection
MRB	Manufacturing Record Book
MT	Magnetic Particle Testing
mpy	Mils Per Year
NACE	National Association Of Corrosion Engineer
NDE	Non-Destructive Examination
NDT	Non-Destructive Testing
NPS	Nominal Pipe Size
OD	Outer Diameter
OT	Operational Technology

All parties consent to this document being signed electronically -PT&CS/GP/INT/2022/5777

Abbreviations	
PAUT	Phased Array Ultrasonic Testing
PCN	Personnel Certification in Non-Destructive Testing
PMI	Positive Material Identification
PPE	Protective Personnel Equipment
ppm	Parts Per Million
ppmw	Parts Per Million (By Weight)
PQR	Weld Procedure Qualification Record
PREN	Pitting Resistance Equivalent Number
psig	Pounds Per Square Inch Gauge
PT	Dye-Penetrant Testing
PWHT	Post Weld Heat Treatment
QA	Quality Assurance
QAS	Quality Assurance System
QC	Quality Control
QMS	Quality Management System
RHC	Re-Heat Cracking
RT	Radiographic Testing
SAW	Submerged Arc Welding
SDH	Side Drilled Hole
SDSS	Super Duplex Stainless Steel
SMAW	Shielded Metal Arc Welding
SOHIC	Stress-Oriented Hydrogen Induced Cracking
SS	Stainless Steel

All parties consent to this document being signed electronically -PT&CS/GP/INT/2022/5777

Abbreviations	
SSC	Sulfide Stress Cracking
TOFD	Time Of Flight Diffraction
TPI	Third Party Inspector
UAE	United Arab Emirates
UNS	Unified Numbering System
UT	Ultrasonic Testing
UTS	Ultimate Tensile Strength
VT	Visual Examination
WFMT	Wet Fluorescent Magnetic Particle Testing
WPQR	Welding Procedure Qualification Record
WPQT	Welding Procedure Qualification Tests
WPS	Welding Procedure Specification
WQT	Welder Qualification Test
WRC	Welding Research Council

All parties consent to this document being signed electronically -PT&CS/GP/INT/2022/5777

SECTION A – GENERAL

2 REFERENCE DOCUMENTS

2.1 International Codes and Standards

The following Codes and Standards shall form a part of this Specification When an edition date is not indicated for a Code or Standard, the latest edition in force at the time of the contract award shall apply.

AMERICAN SOCIETY OF MECHANICAL ENGINEERS (ASME)

ASME B31.1	Power Piping
ASME B31.3	Process Piping
ASME B31.8	Gas Transmission and Distribution Piping Systems
ASME B31.4	Pipeline Transportation Systems for Liquid Hydrocarbon and other liquids.
ASME B16.49	Factory Made Rough Steel, Butt Welded Induction bends for Transportation and Distribution systems.

ASME BOILER AND PRESSURE VESSEL CODE

Section I	Rules for Construction of Power Boilers
Section II, Part A	Ferrous Materials Specifications
Section II, Part C	Welding Rods, Electrodes and Filler Metals
Section V	Non-destructive Examination
Section VIII, Div. 1	Rules for Construction of Pressure Vessels
Section VIII, Div. 2	Pressure Vessels - Alternative Rules
Section IX	Welding and Brazing Qualifications

AMERICAN PETROLEUM INSTITUTE (API)

API 5L	Specification for Line Pipe
API 5LD	CRA Clad or Lined steel Pipe
API 510	Pressure Vessel Inspection Code: In-service Inspection, Rating, Repair, and Alteration
API 570	Piping Inspection Code: In-service Inspection, Rating, Repair, and Alteration of Piping Systems
API 574	Inspection Practices for Piping System Components
API Standard 650	Welded Steel Tanks for Oil Storage
API RP 934-A	Materials and Fabrication of 2¼Cr-1Mo, 2¼Cr-1Mo-V, 3Cr-1Mo, and 3Cr-1Mo-¼V Steel Heavy Wall Pressure Vessels for High Temperature, High Pressure Hydrogen Service
API RP 934-C	Materials and Fabrication of 1¼-½Mo Steel Heavy Wall Pressure Vessels of High-Pressure Hydrogen Service Operating or Below 825 °F (440 °C).

All parties consent to this document being signed electronically -PT&CS/GP/INT/2022/5777

API RP 934-E	Closed Recommended Practice for Materials and Fabrication of 1¼Cr-½Mo Steel Pressure Vessels for Service Above 825 °F (440 °C)
API 1104	Welding of Pipelines and Related Facilities

AMERICAN SOCIETY OF NONDESTRUCTIVE TESTING (ASNT)

SNT-TC-1A	Recommended Practice for Personnel Qualification And Certification In Nondestructive Testing

AMERICAN SOCIETY FOR TESTING AND MATERIALS (ASTM)

ASTM A370	Standard Test methods and definitions for Mechanical testing of Steel products.
A380	Standard Practice for Cleaning and Descaling Stainless Steel Parts, Equipment and Systems
A578	Specification for Straight-Beam Ultrasonic Examination of Plain and Clad Steel Plates for Special Applications
A262	Standard Practices for Detecting Susceptibility to Intergranular Attack in Austenitic Stainless Steels1
A833	Indentation Hardness of Metallic Materials by Comparison Hardness Testers
E94	Standard Guide for Radiographic Examination
E10	Test Method for Brinell Hardness of Metallic Materials
A262	Standard Practices for Detecting Susceptibility to Intergranular Attack in Austenitic Stainless Steels
E92	Test Method for Vickers Hardness of Metallic Materials
E110	Standard Test Method for Indentation Hardness of Metallic Materials by Portable Hardness Testers
E140	Standard Hardness Conversion Tables for Metals
E747	Standard Practice for Design, Manufacture and Material Grouping Clarification of Wire Image Quality Indicators (IQI) used for Radiology
G28	Standard Test Methods for Detecting Susceptibility to Intergranular Corrosion in Wrought, Nickel-Rich, Chromium-Bearing Alloys
G39	Preparation and Use of Bent-Beam Stress-Corrosion Test Specimens
G48	Standard Test Methods for Pitting and Crevice Corrosion Resistance of Stainless Steels and Related Alloys by Use of Ferric Chloride Solution

AMERICAN WELDING SOCIETY (AWS)

A2.4	Standard Symbols for Welding, Brazing, and Non-destructive Examination
A3.0	Standard Welding Terms and Definitions
A4.2	Standard Procedure for Calibrating Magnetic Instruments to Measure the Delta Ferrite Content of Austenitic and Duplex Austenitic-Ferritic Stainless Steel Weld Metal
ANSI/AWS A5.01	Filler Metal Procurement Guidelines

BRITISH STANDARD

BS 7448, Part 1, Part 2	Fracture mechanics toughness tests – welds.
BS EN ISO 15653	Metallic Materials – Method of tests for the determination of quasistatic toughness of welds.

All parties consent to this document being signed electronically -PT&CS/GP/INT/2022/5777

DET NORSKE VERITAS (DNV)

DNV-ST-F101	Submarine Pipeline Systems

DEUTSCHE INSTITUTE FUR NORMUNG (DIN)

DIN 54109 - Part 1	Non-Destructive Testing: Image Quality of Radiographs of Metallic Materials

EUROPEAN COMMITTEE FOR STANDARDIZATION

EN 10204	Types of Inspection Documents - Metallic Products

INTERNATIONAL STANDARDS ORGANISATION (ISO)

ISO 9001	Quality Management Systems – Requirements
ISO 9004	Managing For The Sustained Success Of An Organization - A Quality Management Approach
ISO 19011	Guidelines for Auditing Management Systems

NATIONAL ASSOCIATION OF CORROSION ENGINEERS (NACE)

NACE MR0175 /ISO 15156 Parts 1 to 3	Petroleum and natural gas industries — Materials for use in H_2S-containing environments in oil and gas production
NACE MR0103 / ISO17945	Petroleum, petrochemical, and natural gas industries — Materials for use in H2S-containing environments in oil and gas production
NACE SP 0178	Design, Fabrication, and Surface Finish Practices for Tanks and Vessels to Be Lined for Immersion Service
NACE TM0177	Laboratory Testing of Metals for Resistance to Sulfide Stress Cracking and Stress Corrosion Cracking in H_2S Environments
NACE TM0284	Evaluation of Pipeline and Pressure Vessel Steels for Resistance to Hydrogen-Induced Cracking
NACE TM0316	Four-Point Bend Testing of Materials for Oil and Gas Applications

2.2 ADNOC Specifications

AGES-SP-01-002	Structural Steel Supply, Fabrication and Erection Specification
AGES-SP-04-002	Control Valve Specification
AGES-SP-05-011	Water Treatment & Chemical Injection Packages Specification
AGES-SP-05-012	Sulphur Handling Equipment and Packages
AGES-SP-06-002	Pressure Vessel Specification
AGES-SP-06-003	Shell and Tube Heat Exchanger Specification
AGES-SP-06-004	Air Cooled Heat Exchangers Specification

All parties consent to this document being signed electronically -PT&CS/GP/INT/2022/5777

AGES-SP-06-005	Above Ground Vertical Storage Tanks Specification
AGES-SP-06-007	Fired Heaters (Amendments / Supplements to API Standard 560)
AGES-SP-06-008	Pig Launcher and Receivers - Offshore
AGES-SP-06-009	Water Tube Boilers
AGES-SP-06-011	Vessel Trays and Internals Specification
AGES-SP-06-012	Plate and Frame Heat Exchangers Specification
AGES-SP-06-013	Double Pipe and Multi Tubes Heat Exchanger
AGES-SP-06-014	Hazardous Waste Incinerator - Rotary Kiln Type
AGES-GL-07-001	Material Selection Guidelines
AGES-SP-07-001	Cathodic Protection Specification
AGES-SP-07-002	External Pipeline Coatings Specification
AGES-SP-07-003	Requirement for Materials in Severe Service
AGES-SP-07-004	Painting & Coating Specification
AGES-SP-07-005	Requirements for Cr-Mo / Cr-Mo-V Steel in High Temperature, High Pressure Hydrogen Service
AGES-SP-07-006	Field Joint Coating for Line Pipe
AGES-SP-07-009	Galvanizing
AGES-SP-07-010	Internal Cleaning of Piping System Specification
AGES-SP-07-011	Preservation & Export Packing Specification
AGES-SP-09-002	Piping Material Specification Index
AGES-SP-09-003	Specification for Manual Piping & Pipeline Valves
AGES-SP-09-006	Pipe Support Specification
AGES-SP-09-009	Piping Tie-ins & Hot Tapping
AGES-SP-09-012	Specification for Metallic Expansion Joints
AGES-SP-09-015	Clad Pipes, Fittings and Flanges Specification
AGES-DW-09-001	Pipe Support Standard Drawings
AGES-SP-10-001	Specification for Linepipe
AGES-SP-10-002	Specification for Subsea Pipeline systems (Amendments / Supplements to DNVGL-ST-F101)
AGES-SP-10-003	Onshore Pipelines Design and Construction Specification
AGES-SP-10-006	CRA Clad and Lined Steel Pipe (Amendments / Supplements to API Specification 5LD)
AGES-SP-10-009	Pipeline Launchers and Receivers (Onshore)
AGES-SP-10-010	Hot Induction Bends Specification
AGES-SP-10-011	Pipeline Pigging Tees Specification
AGES-SP-10-013	Pipeline Isolating Joints

All parties consent to this document being signed electronically -PT&CS/GP/INT/2022/5777

AGES-SP-10-014	Pipeline Cleaning, Gauging, Filling and Hydrostatic Testing Specification
AGES-SP-11-001	Offshore Steel Structures Specification
AGES-SP-13-001	Criticality Rating Specification
AGES-SP-13-002	Procurement Inspection and Certification Requirement in Projects
AGES-SP-13-003	Traceability of Shop & Field Piping Materials
AGES-GL-13-001	Contractors QA/QC Requirement
AGES-GL-13-002	Positive Material Identification of Equipment and Piping

3 DOCUMENT PRECEDENCE

The specifications and codes referred to in this Specification shall, unless stated otherwise, be the latest approved issue at the time of contract award.

It shall be the CONTRACTOR's responsibility to be, or to become, knowledgeable of the requirements of the referenced Codes and Standards.

The CONTRACTOR shall notify the COMPANY of any apparent conflict between this specification, the related data sheets, the Codes and Standards and any other specifications noted herein.

Resolution and/or interpretation precedence shall be obtained from the COMPANY in writing before proceeding with the design/manufacture.

In case of conflict, the order of document precedence shall be:

a. UAE Statutory requirements

ADNOC HSE Standards

Equipment datasheets and drawings

Project Specifications and standard drawings

Company Specifications

National / International Standards

4 SPECIFICATION DEVIATION / CONCESSION CONTROL

Deviations from this Specification are only acceptable where the CONTRACTOR / MANUFACTURER has listed in his quotation the requirements he cannot, or does not wish to comply with, and the COMPANY / CONTRACTOR has accepted in writing the deviations before the order is placed.

In the absence of a list of deviations, it will be assumed that the MANUFACTURER complies fully with this Specification.

Any technical deviation to this specification and its Appendices shall be sought by the CONTRACTOR only through a CONCESSION REQUEST format. CONCESSION REQUEST requires COMPANY'S review and approval prior to the proposed technical changes being implemented.

Technical changes implemented prior to COMPANY approval are subject to rejection.

All parties consent to this document being signed electronically -PT&CS/GP/INT/2022/5777

5 QUALITY ASSURANCE/QUALITY CONTROL

The CONTRACTOR shall have in effect at all times, a QA/QC Management program which clearly establishes the authority and responsibility of those responsible for the quality management system. Persons performing quality functions shall have sufficient and well defined authority to enforce quality requirements that initiate, identify, recommend and provide solutions to quality problems and verify the effectiveness of the corrective action.

CONTRACTOR's Quality Management Systems shall comply with all the requirements of ISO 9001

"Quality Management Systems – Requirements" and ISO 9004 "Quality management -- Quality of an organization - Guidance to achieve sustained success".

A copy of the CONTRACTOR'S QA/QC program shall be submitted to the COMPANY with its quotation for review and concurrence prior to award. If CONTRACTOR'S QA/QC management program is ISO 9001 certified, then only a copy of the ISO 9001 certificate is required. In addition, if CONTRACTOR's facility is ISO 9001 certified, QA audit requirements will be waived in favor of ISO 9001 certification registrar audits, unless the COMPANY's trend analysis program indicates areas of concern.

The CONTRACTOR shall identify in documents to its MANUFACTURERS, SUPPLIERS, VENDORS and SUBCONTRACTORS all applicable QA/QC requirements imposed by the COMPANY, and shall ensure compliance. CONTRACTOR shall provide objective evidence of its QA/QC surveillance for all levels of its activity.

All parties consent to this document being signed electronically -PT&CS/GP/INT/2022/5777

SECTION B

B0-1 Introduction

All Welding & NDE activities shall be performed in accordance with the applicable design/manufacturing code as detailed below and as supplemented by this specification.

Piping	ASME B31.1 or ASME B31.3
Pressure Vessels & Heat Exchanges	ASME VIII Div 1 or Div 2
Storage Tanks	API STD 620 or API STD 650

Throughout the rest of this specification the applicable code from above for the application will be referred to as 'fabrication code'.

The following sections describe the requirements for the following

Section B (Part 1)	Welding & NDE - General	Defines the minimum requirements applicable to welding and NDE activities for the manufacture of all items.
Section B (Part 2)	Welding & NDE of Piping Systems	Defines the minimum requirements that apply specifically to the welding & NDE of piping systems in addition to those defined in General
Section B (Part 3)	Welding & NDE of Pressure Vessels & Heat Exchangers	Defines the minimum requirements that apply specifically to the welding & NDE of pressure vessels and heat exchangers in addition to those defined in General
Section B (Part 4)	Welding & NDE of Storage Tanks	Defines the minimum requirements that apply specifically to the welding & NDE of storage tanks in addition to those defined in General

In addition, the following Appendices shall apply for service conditions and/or applications (as applicable) in addition to Section B1 to B4

Appendix E1	Welding & NDE Requirements For Weld Overlay	
Appendix E2	Welding & NDE Requirements For Cr-Mo / Cr-Mo-V Steel In High Temperature, High Pressure Hydrogen Service	As defined in AGES-07-005 Requirements For Cr-Mo / Cr-Mo-V Steel In High Temperature, High Pressure Hydrogen Service
Appendix E3	Welding & NDE Requirements For Severe Service	As defined in AGES-SP-07-003 Requirements For Materials In Severe Service 1. Sour service / Wet H_2S service. 2. Alkaline carbonate services. 3. Amine services with any concentration. 4. Caustic services with any concentration. 5. Ammonium bisulphide NH_4HS with concentration >2 wt%

All parties consent to this document being signed electronically -PT&CS/GP/INT/2022/5777

B1 SECTION B (PART 1) – WELDING AND NDE - GENERAL

B1-1 Documentation

All documents for approval by COMPANY shall be reviewed and approved by CONTRACTOR prior to submission to COMPANY.

B1-1.1 Welding Procedures and Qualification

a. Welding procedures to be used shall be submitted as a complete package to CONTRACTOR / COMPANY for the technical approval prior to the start of work. The welding procedure shall include the Welding Procedure Specifications (WPS), Qualification Test Records (PQR). The package shall included Welding description, drawings and weld maps as applicable.

b. Approval of welding procedures shall not be construed as authority for deviation from listed specifications 6or requirements of the relevant codes and standards and shall not relieve the contractor, fabricator, or vendor from correcting any deviations.

c. All WPSs, PQRs, and Weld Maps shall be available at the work site for verification at any time by the contractor.

d. The PQRs shall include certified copies of all test records.

e. Originals of all test records, mill certificates, etc. including records from the independent test laboratory shall be made available for review by CONTRACTOR / COMPANY upon request.

f. The use of any welding procedure previously qualified shall be approved by COMPANY case by case. However, the assigned inspector and the contractor welding engineer/representative shall verify that the welding procedure is within the welding parameters qualification range (e.g., diameter, thickness, material grade, etc.) for the new job.

B1-1.2 Weld Maps

The VENDOR shall submit a detailed weld map or welding procedure summary to the COMPANY at the time of WPS/PQR submittal. Fabrication shall not start until the weld map or summary is returned with approval to proceed. Welding symbols shall be in accordance with AWS A2.4. The weld map or summary shall contain, as a minimum, the following information:

a. A sketch or drawing of the equipment or item identifying weld location.

Material type(s), grade(s), thickness and diameter for each type of equipment component.

WPS to be used for each joint or type of joint.

Minimum Design Temperature (MDMT) and whether impact-tested WPS is/are required.

PWHT if required and reason (Process or Code).

Type of joint (e.g. full or part penetration, butt weld / fillet weld, sit-in / sit-on, single/double sided).

Special internal or external finish requirements, if any.

B1-1.3 PWHT Procedures

Post Weld Heat Treatment procedures (PWHT) procedures shall be submitted to COMPANY and approved prior to use. PWHT procedures shall include joint details (material spec/grade, diameter, thickness), support types, number and locations; thermocouple types, number, method of attachment, locations and calibration method; heating and cooling methods, heating and cooling rates and holding

All parties consent to this document being signed electronically -PT&CS/GP/INT/2022/5777

temperature/time and furnace atmosphere, and heating band and insulation location for local PWHT. AWS D10.10; “Recommended practice for local heating of welds in piping and tubing” should be referred for band width of heating, Insulation, thermal couple placement etc.

B1-1.4 Welder Performance Register / Matrix

To maintain the validation of performance qualification, a welder performance register shall be kept up to date. This register shall contain the following data as a minimum:

a. Welder's name and stamp.

Data of weld inspection and inspection results.

Materials (base and consumable).

Configuration data (diameter, wall thickness, etc.).

Reference to WPS used.

All other essential variables.

Qualification Renewal details

Continuity sheet/s to be available for inspection

B1-1.5 Consumables Storage and Handling Procedure

The VENDOR/FABRICATOR shall submit their procedure for the storage and handling of electrodes, filler metals and fluxes to COMPANY for review prior to the start of fabrication. The procedure shall include moisture, cleanliness identification and issuing controls, (i.e. material traceability) and oven controlled temperature prior to use. PWHT Procedure

B1-1.6 NDE Procedures

NDE procedures and a NDE map shall be submitted to the CONTRACTOR. Examination shall not proceed until approved by COMPANY. The NDE map shall show each procedure used. In the case of prefabricated components and piping, a NDE procedure utilization summary is acceptable in lieu of the NDE map. In addition, all other records pertaining to inspection and certification shall be available for review by the COMPANY’S inspector. The following information shall be listed in the NDE procedures as a minimum:

a. Visual Inspection (VT)

Scope; applicable code/standard; materials; surface preparation; minimum light level; acceptance level; reporting format; operator qualification; stage performed.

b. Magnetic Particle (MT)

Scope; surface preparation; areas to be examined; stage(s) at which examined (i.e. after welding, after heat treatment, after hydro test, etc.); magnetizing technique (e.g. AC Yoke); equipment used; magnetic ink trade name; frequency of calibration of equipment and test of bath strength; coverage and direction of magnetic field; measurement of field strength; application of examination media; minimum light level; acceptance level; reporting format; operator qualifications.

c. Liquid Penetrant (PT)

Scope; type of penetrant, developer, and cleaning method to be used, surface preparation; cleaning and drying; temperature limitations; penetrant application method and time; removal of excess

All parties consent to this document being signed electronically -PT&CS/GP/INT/2022/5777

penetrant; drying; application of developer; development time; minimum light level; acceptance level; reporting format; operator qualification; stage performed.

d. Radiographic Examination (RT)

i. Scope; source type (e.g. X-ray, IR912, etc.); type of film, material specification and type; material thickness; pipe diameter for pipe components; maximum KV of X-ray source; maximum focal spot size; minimum film to source distance; exposure time; sketch of component and source; film and penetrameter placement for components other than simple shape; intensifying screens type and thickness; image quality indicator type and pattern; technique (e.g. double wall single image, etc.); sensitivity; film density; viewing conditions for high density; back scatter checks/protection; marking and identification of radiographs; film overlap; film storage; acceptance criteria; reporting format; operator qualifications; stage performed.

ii. Digital image acquisition, display and storage can be applied to Radiography. Digital imaging of all radiographic test results shall be performed in accordance with ASME BPVC Section-V, Article-2 and Mandatory Appendix-III.

iii. Contractor to submit written procedure for digitization of radiography films in accordance with ASME Section V, along with manufacturer recommendations and equipment manual for COMPANY approval. Digitized films shall be reviewed by COMPANY on random basis. Digitized films shall be submitted in hard drive and software for viewing the digitized films shall be submitted by Contractor. Format should be in manufacturer type file source format and in JPG format, with detailed index showing weld joint, RT report details as NDE summary and to provide link for retrieval.

e. Ultrasonic Examination (UT)

Scope; equipment; probe type and details; surface preparation, cleaning and couplant; technique sheet for each technique specified (number of techniques to be sufficient to cover all type of joints to be covered by the procedures scope); material; weld material (if different); sketch showing joint configuration, beam coverage; extent of scan; scanning pattern; material thickness and curvature; calibrations and frequency; means of setting and scanning sensitivity levels and DAC curves; flaw location and size evaluation; acceptance criteria; reporting format; operator qualifications.

B1-1.7 Weld Repair Procedures

Weld repair procedures shall be submitted to COMPANY for review prior to repair. The procedure shall state the following information as a minimum in addition to that required for the WPS:

a. Means of excavating defect from weld.

b. NDE method used to verify complete defect removal.

c. WPS used to fill excavated area.

d. NDE method used to verify repair weld is sound (repeating at least the original inspection procedure).

e. Other required tests (PMI, Ferrite, Hardness Tests, etc.).

f. Weld repair of base metal defects requires COMPANY approval.

All parties consent to this document being signed electronically -PT&CS/GP/INT/2022/5777

B1-1.8 Manufacturing Record Book (MRB)

Manufacturing Record Book shall be submitted to COMPANY for approval upon completion of the workscope. To include as a minimum: purchase order, as-built drawings, Weld Log, NDE log, All materials certification, PWHT records, NDE Records, copies of all approved documents, and technical deviation requests. Production weld monitoring where required to be performed.

B1-2 Qualifications

B1-2.1 Welding Procedure Qualification

a. Welding procedure specifications (WPS) and procedure qualification records (PQR) shall conform to the requirements of the applicable fabrication code and the requirements of this Specification.

b. All Welding Procedure Specifications (WPS) and Procedure Qualification Records (PQR) shall be qualified by the fabricator/ manufacturer themselves.

c. WPSs shall be approved by COMPANY prior to use.

d. All Welding Procedure Qualifications shall be witnessed and approved by a COMPANY approved Third Party Inspector (TPI) and Procedure Qualification Records shall be signed / approved by TPI.

e. The WPS shall state the actual consumable trade name, type and designation.

f. Each WPS shall state all the essential, non-essential and supplementary welding variables, the welding code, the project name and number.

g. Welds that are deposited by procedures differing from those authorized by the COMPANY may be subjected to complete removal at VENDOR'S expense.

h. For any equipment or piping identified as operating in sour or severe service, the welding procedure specifications and procedure qualifications shall also meet the requirements of Appendix 3 of this specification.

i. Welding Procedures previously qualified may be submitted for approval as long as they meet the requirements of this Specification.

j. Special internal finish like flush ground finish or smooth finish (for process requirements) may need more stringent qualification procedure and range limits and also a higher level of NDT as specified in drawings/ COMPANY documents.

k. Fillet welds shall be qualified by groove welds per ASME IX although separate WPS's shall be submitted.

B1-2.1.1 Hardness Testing

If hardness testing is required by this specification for the application, PQR will be subject to hardness tests. Details of hardness testing are given in the applicable sections.

B1-2.1.2 Impact Testing

a. Where required by fabrication code or service conditions as detailed in this specification or on the drawings or datasheet, impact testing shall be performed at or below MDMT.

b. Test locations shall be as shown in

c. Figure B1.1.

d. Testing of FL+5 is required if heat input is 2kJ/mm or greater.

All parties consent to this document being signed electronically -PT&CS/GP/INT/2022/5777

e. Details on determination of MDMT are described in AGES-SP-07-008.

Figure B1.1 Specimens and notch detail per ASTM A370.

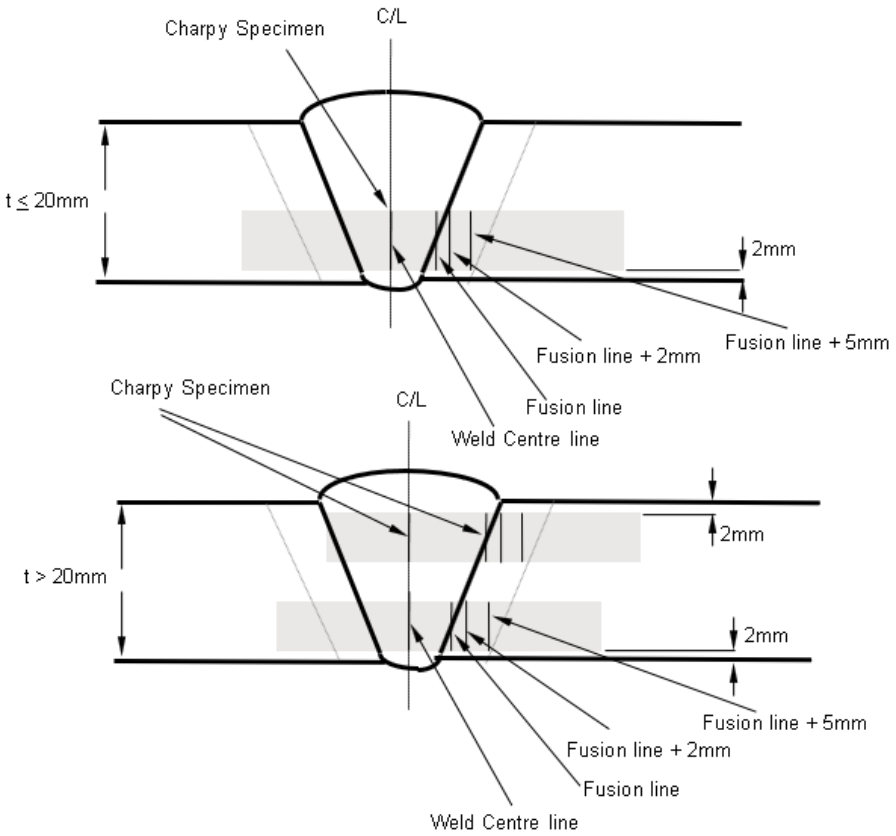

B1-2.2 Welder Performance Qualification

a. All individual welders shall be qualified as per fabrication code, and reviewed / witnessed by COMPANY.

b. All Welding Performance Qualifications shall be witnessed and approved by a COMPANY approved Third Party Inspector (TPI) and welder's certificates shall be signed / approved by TPI.

c. Welders shall be qualified for tacking.

d. Welders shall be qualfied on a fillet weld test for fillet welding applcations.

e. Performance qualification tests shall not be performed on production joints.

All parties consent to this document being signed electronically -PT&CS/GP/INT/2022/5777

B1-3 Welding Processes, Welding Consumables, Welding of Materials

B1-3.1 Welding Processes

Table B1.1 Acceptable Welding Processes:

Welding Process	AWS Designation	Applications Note i, ii		
		Piping, Note i,ii	Pressure Vessels, Note i,ii	Tanks Note i,ii
Shielded Metal-Arc Welding	SMAW	Yes	Yes	Yes
Gas Tungsten-Arc Welding Note iii	GTAW	Yes	Yes	Yes
Submerged Arc Welding Note iv	SAW	Yes	Yes	Yes
Gas Shielded Flux Cored Arc Welding Note vi	FCAW	No	No	Ref B4
Gas Metal Arc Welding	GMAW (Spray or Pulsed Arc Transfer)	No	No	Ref B4
Gas Metal Arc Welding	GMAW (Short Arc Transfer)	No	No	Ref B4
Electroslag Welding Note v	ESW	No	No	Ref B4

Notes:

i. GTAW shall be used for all piping welds less than or equal to 6mm thick and all piping less than 2" NPS.
ii. Single sided welds for piping and pressure vessels shall be root welded with GTAW.
iii. All GTAW equipment shall be fitted with a high frequency starting unit and a crater-eliminating slope out control.
iv. SAW may be used for diameters 6" NPS and greater.
v. ESW may be used for cladding / overlaying components for piping, pressure vessels& heat exchanges and tanks, ref Appendix 1.
vi. Self shielded FCAW is not approved.
vii. FCAW is not approved for offshore use

B1-3.2 Welding Consumables

This section details requirements for welding consumables in general. Specific electrodes for specific materials are covered in the Welding of Materials section.

a. Filler metal shall be as specified in ASME Section II, Part C. AWS A5 series filler metal is also acceptable.

b. The brand name of welding consumables for use in an impact tested application shall not be changed.

c. Certification is required for all welding consumables. All such certification shall be original or red stamped verified copies by CONTRACTOR or the COMPANY approved inspectors.

All parties consent to this document being signed electronically -PT&CS/GP/INT/2022/5777

d. Certification shall be in accordance with EN10204 Level 3.1 for chemical analysis for all applications and Level 2.2 mechanical as a minimum.

e. COMPANY may specify 3.2 on chemical and/or mechanical and/or other testing dependent upon the application.

f. Electrode or filler wire size shall not be changed from that used in qualification.

g. Welding consumables shall be stored with care, under dry conditions in their original unopened packing and in accordance the manufacturers recommendations and COMPANY Approved Consumable Storage and Handling Procedure. Consumables shall be stored on shelves or pallets as a minimum and shall not be stacked on the floor.

h. Low hydrogen electrodes and fluxes shall be stored and baked in accordance with the MANUFACTURER'S instructions and COMPANY Approved Consumable Storage and Handling Procedure to give a weld metal deposit with a diffusible hydrogen content which shall not exceed 5 ml/100 g weld metal.

i. Use of extra moisture resistant (EMR) consumables with a diffusible hydrogen content of less than 5ml/100 g deposited weld metal may be specified.

j. Low hydrogen vacuum packed electrodes ("vacpacs") shall be marked with the time of opening and used in a time within the manufacturer's guidelines. Any unused vacpac electrodes shall be returned for baking or discarded.

k. Sealed cans and "vacpacs" shall be stored and conditioned per the MANUFACTURER'S recommendations. For open packs, the atmosphere exposure time shall meet the applicable fabrication code and MANUFACTURER'S limit.

l. In addition to Fabrication Code and Manufacturers recommendations:

   i. Carbon steel and low alloys Steel low hydrogen electrodes shall be stored in quivers for no more than 8 hours.

   ii. Cr-Mo steel electrodes shall be stored in quivers for no more than four hours.

m. Electrodes stored in quivers, but not used within the specified time, shall be restored in ovens. No electrodes shall be left lying about the site or in the shop. Electrodes so left shall be scrapped.

n. Quivers, baking ovens and storage ovens shall be calibrated at least every 12 months.

o. Where the MANUFACTURER or fabrication code specify restrictions for temperature and/or humidity, these shall be monitored by suitable calibrated equipment and readings recorded at least one per day.

p. Where necessary due to environmental conditions; heating, cooling or dehumidifying is required to stay within fabrication code or MANUFACTURERS recommendations, suitable equipment shall be used.

q. Welding consumables shall be clearly identified. The identification shall state as a minimum manufacturer, brand name, grade, size and batch number. Unidentifiable consumables shall be discarded.

r. Welding consumables shall be withdrawn from storage only when required for immediate use. Unused consumables shall be returned to storage on completion of the welding operation. Batch numbers and quantity shall be recorded on issue and return. After issue from storage, flux shall be held in a heated silo in accordance with fabrication code and MANUFACTURERs recommendations.

All parties consent to this document being signed electronically -PT&CS/GP/INT/2022/5777

s. Submerged arc flux may be recirculated but shall be free from fused flux, fines, mill scale, dirt, or other foreign matter in accordance with the MANUFACTUERS recommendations. Wet flux shall be discarded.

t. Submerged arc flux shall not be recycled, eg reground and reused.

u. Solid wires for automatic-welding processes shall contain the principal elements required for the deposited weld metal. Welds deposited by the submerged arc process shall not derive any principal elements from the flux.

v. Fluxes that the flux manufacturer recommends for single pass welds shall not be used for multiple pass welds. Active fluxes are not permitted.

w. Submerged arc welding of production parts shall be performed using same name brand and grade of flux and the same name brand and grade of wire as used for the PQR.

B1-3.3 Shielding and Purging Gases

a. Shielding Gases for GTAW:

i. Oxidizing elements are not permitted in GTAW shielding gas.

ii. Gas compositions for materials susceptible to hydrogen embrittlement and/or hydrogen porosity, e.g. low/medium alloyed steels, martensitic stainless steels, and Cu and Cu alloys, shall be limited to argon, helium or a mixture thereof.

iii. Argon / nitrogen gas mixtures may be used for welding of duplex stainless steels.

b. Shielding Gases for GMAW:

i. The filler wires shall be compatible with the type of gas. In case of active gases (e.g. carbon dioxide) de-oxidizing elements shall be present in the filler wire.

ii. Root gas composition for all welding processes shall meet the MANUFACTURER'S requirements for the filler metal and welded metal.

c. Purging / Backing Gases:

Unless otherwise specified, purging gases shall be argon, with measured oxygen content in the purge shall be no greater than 0.5%.

B1-3.4 Welding of Materials

B1-3.4.1 Welding Heat Input Limitations

Welding heat inputs for various materials shall not exceed the following limits:

Table B1.2 List Of Acceptable Heat Input and Interpass Temperature

Material	Heat Input (Kj/mm)	Interpass Temperatutre °C
Carbon & Low Alloy Steels	3.0	300
Austenitic Stainless Steel	3.5	150
6% Mo Stainless Steel	1.0	150

All parties consent to this document being signed electronically -PT&CS/GP/INT/2022/5777

Material	Heat Input (Kj/mm)		Interpass Temperatutre °C	
22% Cr Duplex	0.5-1.75		<3mm	50
25% Cr Duplex	Root	1.0-1.5	3-6mm	70
	Pass 2,3	0.5-1.2	6-9.5	100
	Remained	0.5-1.75	>9.5	120
Nickel Alloys	2.0		150	
CuNi	2.0		100	

B1-3.4.2 Carbon and Low Alloy steel

B1-3.4.2.1 General

Preheat shall be 100°C minimum if UTS is greater than 450 N/mm.

B1-3.4.2.2 Consumables

a. Filler wires in specification ASME SFA-5.2 shall not be used for welding with GTAW process.

b. Carbon / 0.5% molybdenum filler metal for welding of carbon steel must be authorized by the COMPANY and is generally not permitted. Note filler metal or deposit chemistries conforming to A-number 2 (ASME SEC IX), i.e., carbon-0.5% Mo, shall not be used for sour service applications without post weld heat treatment.

c. When using the SMAW process, low hydrogen electrodes shall be used for all pressure retaining welds or attachments to pressure boundaries. For carbon steel piping welded from one side only, E6010 may be used for the root pass of utility piping systems with company approval.

d. Electrodes of the following ASME Classifications are not acceptable for pressure retaining welds: E6012, E6013, E6020, E7014, E7020, E7024, and E7028.

e. Carbon and low alloy steel electrodes/bare wire that have a nonspecific chemistry as indicated by a “G” classification suffix (i.e., EXXXX-G, ERXXX-G, EG, or EXXTX G) shall not be used, unless detailed information is provided and approved by COMPANY

   i. Filler metal conforming to ER70S-6 shall not be used with GTAW process for sour service. If ER70S-6 is to be used with GMAW process for sour service, the chemistry of the wire shall not exceed the requirements of NACE SP0472 (as follows): Carbon (C) 0.10wt% max;

   ii. Manganese (Mn) 1.60 wt% max;

   iii. Silicon (Si) 1.00 wt% max

f. Fine-grained low-carbon-manganese steels shall be welded with basic low-hydrogen type of electrodes. The electrode deposits shall have the minimum specified yield strength and the required minimum toughness properties at least equal to those of the base material.

g. The use of austenitic welding consumables to avoid PWHT is prohibited.

All parties consent to this document being signed electronically -PT&CS/GP/INT/2022/5777

B1-3.4.3 9Cr1Mo

B1-3.4.3.1 General

a. 9Cr-1Mo-V (Grade P91) welding procedures shall be qualified with impact tests performed on the thickest pipe section used and include testing on the base metal, and shall included testing on the Weld Metal Centreline (WMC), Fusion Line (FL) Fusion Line =2mm (FL+2) and if Heat input is over 2KJ/mm at Fusion Lline +5(FL+5), at mid thickness (1/2T), but shall be sufficient to capture each welding process and consumable tradename.

b. Consumables used to provide WPQR test specimens shall be the same (brand name) as those used in the fabrication of P91 spools.

c. For welding P91 materials, a basic electrides & flux shall be used.

d. Heat input and other relevant welding parameters shall be controlled and monitored during production welding.

e. Inspection records showing compliance with actual WPS parameters during welding (shop records) and PWHT procedures (including complete temperature cycles and PWHT initial temperatures) shall be submitted to the Contractor for each weld made, and included in the Manufacturing Record Book

B1-3.4.3.2 Welding Requirements

a. A preheat temperature of 200°C and a maximum interpass temperature of 350°C shall be maintained.

b. The weld shall be allowed to cool to below 93°C before PWHT commences.

c. During construction, weldments shall be post heated before PWHT at a temperature between 310 °C to 320 °C for a minimum of two hours.

d. PWHT shall be carried out at least 25°C below the tempering temperature.

e. All fillet welds and branch welds shall be 100% MT examined.

f. The WPQR shall verify and include the following for the base metal, HAZ, and weld metal:

   i. Impact test values are an average of 34 J as a minimum, with no value less than 22 J at 21°C.

   ii. Photomicrographs that verify 100% tempered martensite structure are included.

   iii. Heat input used during production welding is not higher than 115 % of the value recorded during WPQR welding.

   iv. For manual GTAW, the rod diameter should be restricted to 3.2 mm maximum.

   v. Repair to ASTM A217 Grade C12A by welding shall follow the requirements in ASME code case 2192-8 or later.

B1-3.4.3.3 Non-Destructive Examination

a. All butt welds shall be 100% RT examined.

b. For components 200mm or larger in diameter, PAUT shall be added when design metal temperature exceeds 552 °C.

c. PAUT information should be stored for later use during project life.

All parties consent to this document being signed electronically -PT&CS/GP/INT/2022/5777

d. All fillet welds and branch welds shall be 100 % MT examined.

e. Acceptance criteria shall conform to fabrication specification.

f. If weld repair is required against a casting, specific approval is required. Supplementary examination of weld preparation shall apply.

B1-3.4.3.4 Quality Assurance and Quality Control

a. Each pipe/fitting/casting/weld shall be subjected to PMI in accordance with AGES-GL-13-002.

The alloy analyser chosen shall be able to differentiate between Grade 9 and Grade 91.

B1-3.4.3.5 Miscellaneous

a. For all the hardness measurements during production welding, the Brinell hardness tester should be used.

b. Local re-normalisation and tempering shall not be permitted.

c. If any component fabricated from Grade 91 is locally heated above Ac1 temperature, then one of the following shall be done:

   i. Re-normalise and temper the entire component;

   ii. Remove the section so heat treated from the component in its entirety, re- normalise and temper, and then re-insert into the component.

B1-3.4.3.6 Welding consumables

a. The following 9Cr-1Mo-V (B9) welding consumables specified in AWS and ASME specifications shall be used:

   i. SMAW: E9015-B9, per A/SFA 5.5;

   ii. GTAW: ER90S-B9 per A/SFA-5.28;

   iii. SAW: EB9 as per A/SFA-5.23;

b. For P91 steels requiring the use of the same brand name of consumable, appropriate re-testing shall be done to demonstrate the controlled quality or performance parameter whenever any of the following occur:

   i. consumable Manufacturer/Supplier has changed the formulation of the filler metal or the flux; or

   ii. the Manufacturer/Supplier has changed sources of raw materials;

   iii. the consumable qualification is more than 12 months old.

c. All SMAW electrodes should be certified to the H4 AWS designation or H5 EN designation.

B1-3.4.4 Austentic Stainless Steel

B1-3.4.4.1 Consumables

Welding consumables for austenitic stainless steels shall have a ferrite number (FN) of 3-10 FN.

B1-3.4.4.2 Other

a. Temperature indicating crayons shall not be used on austenitic stainless steels.

All parties consent to this document being signed electronically -PT&CS/GP/INT/2022/5777

b. The maximum interpass temperature for austenitic stainless steel shall be 150°C.

c. PWHT of austenitic stainless steel materials need not be performed unless specified.

B1-3.4.5 Martensitic and Preciptitation Hardenable Stainless Steels

Martensitic SS used for pressure-containing components, including low-carbon grades and precipitation hardened grades, shall not be welded. Internal non-pressure containing components may be welded, subject to a COMPANY approved welding procedure qualification.

B1-3.4.6 Super Austenitic Stainless Steel

B1-3.4.6.1 Consumables

a. Welding consumables for welding 6% Mo grades UNS 31254, UNS N08367, UNS N08925 & UNS N08926 shall be AWS Classification E/ER NiCrMo-3, E/ERNiCrMo-10, E/ERNiCrMo-13, E/ERNiCrMo-14.

b. For 6% Mo alloys, separate fillet weld procedure qualification tests shall be made.

B1-3.4.7 Duplex Stainless Steel

a. 25% Cr duplex stainless steel shall be impact tested at -50°C in accordance with the impact testing requirements of this specification. Acceptance criteria in accordance with the fabrication code.

b. Duplex stainless steels shall be subject to ASTM G48 Method A corrosion testing in the as-welded condition. Test duration shall be 24h at 22°C for 22%Cr and 24h at 35°C for 25%Cr.

Acceptance criteria for ASTM G48: No pitting. Weight loss <4g/m2.

B1-3.4.7.1 Consumables

a. The brand name or country of origin of consumables for welding duplex stainless steel shall not be changed.

b. The PREN of welding consumables used for production welding of duplex or super duplex stainless steels shall not be less than that the parent materials being welded or reduced by more than 0.5% from that used in qualification.

c. Duplex stainless steel consumables shall comply with a chemical composition accepted as suitable by the material supplier. Only consumables that can be shown to meet the acceptance criteria for the mechanical and corrosion testing required by this standard shall be proposed. The Nickel content shall also overmatch the parent material analysis unless the finished fabrication is to be solution annealed.

d. For duplex stainless steel, separate fillet weld procedure qualification tests shall be made.

e. For 25%Cr duplex stainless steel the PREN shall be minimum 40.

$$PREN = \%Cr+3.3x\%Mo+16x\%N.$$

All parties consent to this document being signed electronically -PT&CS/GP/INT/2022/5777

B1-3.4.8 Copper Nickel Alloys

B1-3.4.8.1 Consumables

a. Welding consumables for welding copper-nickel alloys shall be Monel 67 type (E/ER CuNi).

B1-3.4.8.2 Other

a. Copper-nickel alloys shall be welded using a backing gas.

b. Maximum interpass temperature shall be 100°C.

B1-3.4.9 High Nickel Alloys

B1-3.4.9.1 Consumables

a. Welding consumables for welding high nickel Alloy 825 (UNS N08825) or Alloy 625 (UNS N06625) shall be AWS classification E/ER NiCrMo-3.

b. Welding consumables for Ni base Alloy 625 shall have an iron content of 5% maximum, except for weld overlaying where it shall have a maximum Fe content of 1%.

B1-3.4.10 Titanium

This section specifies the minimum requirements for the welding and inspection of Titanium.

B1-3.4.10.1 Welding Process And Equipment

a. The welding process shall be GTAW with an inert shielding of high purity argon (99.995% pure). No other welding process shall be permitted.

b. The titanium fabrication shop (which shall be segregated from other materials) and storage facility shall be audited prior to fabrication.

c. Precautions should be taken during GTAW welding to ensure adequate supply of shielding gas. Back surfaces in the vicinity of the weld should be provided with additional protection by purging with backing gas of the same purity as the shielding gas. The trailing gas arrangement shall be designed to suit the weld joint configuration in order to protect the weld metal and HAZ from oxygen or nitrogen contamination during welding, and providing shielding while the joint is at temperatures above 100°C.

d. The oxygen content in the backing gas shall be monitored during welding and shall be less than 0.05%.

e. GTAW torches shall be fitted with gas lenses.

f. GTAW welding equipment shall have high frequency start and crater-eliminating slope out control.

g. Welding polarity for titanium is DCEN.

h. Autogenous welding (i.e. without the addition of filler metal) is not permitted.

All parties consent to this document being signed electronically -PT&CS/GP/INT/2022/5777

B1-3.4.10.2 Weld Preparation

a. All scale, oxide or any other foreign material shall be removed from the weld metal contact area and the adjacent surfaces to be cleaned of all foreign matter such as oil, grease paint, etc., for a distance of not less than 100mm from the edges of the weld preparation.

b. Edge preparations for butt-welds and branch connections shall be as per fabrication code.

c. The titanium fabrication shall be carried out in a dust free fabrication shop segregated from other materials, no carbon steel fabrication is permitted in the titanium fabrication area.

d. The bores of pipes of differing internal diameters shall be machined to match bore as per fabrication code.

B1-3.4.10.3 Welding Precautions

a. Titanium and its alloys are subject to severe embrittlement by relatively small amounts of hydrogen, oxygen and nitrogen. Titanium has an extreme affinity for these elements at welding temperatures. Hot titanium will readily absorb oxygen and nitrogen from the atmosphere. Accordingly, titanium must be shielded from the normal atmosphere prior to, during, and after the welding process by blanketing the complete weld zone including the root weld and underside, with an inert atmosphere. Suitable trailing gas and purging/backing gas arrangement shall be designed to protect the weldment during and after welding, while the joint is at temperatures above 100°C. The following are required, and shall be considered essential variables in the PQR:

   i. A shielding gas stream for shielding the molten weld puddle and adjacent surfaces.

   ii. A trailing gas shield for protecting the solidified weld metal and heat affected zone during cooling.

   iii. A backing shield using a backing bar with gas ports for protecting the weld underside during welding and cooling. The flow rates and pressure for this backing gas is to be controlled to prevent root to be pushed-in and resulting in undesirable concave profile.

   iv. Use of a glove box may be used to offset some of the above

b. The inert gas used for shielding shall be argon or argon helium mixture with high purity level (99.995%).

c. Molten titanium is highly reactive with most materials, including all the common refractories. This requires that the weld area be completely free from dust, grease and contact with ceramic blocks or other foreign material during welding, since they cause contamination and embrittlement.

B1-3.4.10.4 Welding Consumables

a. The filler wire shall be in accordance with AWS 5.16 ERTi-1 for the welding process. These shall be stored under consistently clean, warm and dry conditions.

b. Filler wire shall be supplied smooth, clean and free from scale, and shall be suitably protected from contamination by dirt, dust, oil, grease or paint prior to welding.

c. Cleaning and degreasing of filler wires shall be in accordance with the consumable manufacturer's recommendations. Methanol or methylated spirits shall not be used for degreasing filler wires.

All parties consent to this document being signed electronically -PT&CS/GP/INT/2022/5777

B1-3.4.10.5 Welding Qualification Requirements

a. WPS/ PQR/ Welders Qualification etc. shall be as stipulated earlier in this specification, in compliance with fabrication code. No production welding shall be permitted prior to Company's approval of these procedures.

b. The qualification documents shall include full details of the proposed mandatory trailing and back purging methods with respect to gas flow, gas pressure, dams etc.

c. A minimum gas pre-flow of six times the volume of air being purged, i.e. 6xV, shall be used maintaining a slight measured positive flow, subsequently.

d. The weld procedure qualification tests shall be carried out under comparable field conditions, which will necessitate the use of a suitable chamber to ensure the maintenance of acceptable argon gas shielding.

e. Visual examination shall be carried out prior to wire brush cleaning and shall be bright silver color for welder and procedure qualifications, light straw is not acceptable.

B1-3.4.10.6 Welding & Fabrication

a. Surfaces to be welded shall be dry, clean and at a temperature of 15°C minimum.

b. Preheating shall be carried out, as required, using hot air or electrical radiant heating. Use of flames or heating torches is not permitted for this purpose.

c. Welding of thermocouples to the titanium (ie capacitance discharge etc) is not permitted.

d. Pre and post weld gas purging shall be incorporated, preferably controlled by timing devices. Alternatively the gas flow shall be left on continuously.

e. The shielding, trailing and back-purge shall be applied prior to striking an arc and shall be maintained during welding and cooling.

f. The maximum oxygen content of the back purge shall not exceed 0.05% prior to the start of welding and while monitoring during welding.

g. The inert gas shielding shall not be removed until the weld area has cooled to below 100°C. Each weld pass, root area wherever feasible, and the finished weld shall be visually examined.

h. Interpass temperature shall at no time be greater than 100°C.

i. Visual inspection shall be carried out immediately after welding each bead prior to cleaning and on weld completion. Surface contamination of the weld and heat affected zones due to oxygen pick-up shall be visually checked and assessed. The visual examination shall pay particular attention to the color of the weld and adjacent areas. Welds failing the colour acceptance shall be cut out to include 100% of the weld metal and extend into the HAZ and parent material sufficiently to fully remove any unacceptably heat tinted material. Any acceptable colour remaining shall be fully removed prior to welding.

Colour	**Interpretation**
Silver	Correct Shielding, Satisfactory
Light straw	Slight contamination, but acceptable

j. Re-melting or welding onto material that has been discolored by heating is not allowed until the cleaning measures stipulated earlier for base metal and weld preparation are complied with.

All parties consent to this document being signed electronically -PT&CS/GP/INT/2022/5777

k. If the shielding gas is supplied from cylinders the cylinder shall be changed when the pressure drops to 25bar.

l. The use of tack welds is only permitted if the joint is shielded and back purged with inert gas. Demonstration of welder capability to make sound tack weld is required to ensure that it meets the visual inspection standards.

m. In order to preserve the corrosion resistance and minimize hot cracking of weldments, low heat input welding procedures should be used. This can be achieved using small diameter filler wire, low welding current and high speed. Incidence of hot cracking is also minimized by keeping the joint faces clean and free from oil and grease etc., as well as maintaining the shielding gas flowing for a few seconds before and after completion of welding.

n. The technique, consumables, joint geometry etc., shall be in accordance with the procedure previously qualified. The manner of depositing the weld metal shall be such as to ensure complete fusion and full penetration where applicable with no undercutting on the sidewalls of the welding groove and that individual beads of deposited weld metal are not excessively convex.

o. During production, titanium welding shall be carried out in a suitably enclosed clean-dust fee conditioned area dedicated to titanium fabrication. Random checks for iron contamination shall be made by a chemical method (e.g. Ferroxyl test) on surfaces to be welded. Special care shall be exercised to protect the weld area from draughts. All jigs, fixtures and clamps shall be cleaned prior to use, and made from suitable materials to prevent contamination.

p. When welding has stopped for any reason, care should be taken in restarting to ensure that the required penetration and fusion are obtained and that the weld is not contaminated. Any cracked tack welds must be completely removed and no attempts made to incorporate them into the finished weld.

q. At all times the root of the weld and adjacent heat affected zones must be protected from contamination as stipulated earlier.

r. Welding and weld inspection shall meet the requirements of the fabrication code.

B1-3.4.10.7 Cleaning, Removal Of Defects And Repair Welding

a. Prior to cleaning each weld bead shall be visually examined for evidence of unsatisfactory shielding.

b. Further visual examination shall also be carried out after thorough cleaning. Any cracks, porosity or other unacceptable defects that appear of the surface of any bead shall be removed before depositing the following bead.

c. Any section of titanium welding, which receives a ferrous arc strike, must be cut out and replaced.

B1-3.4.11 Welding of Dissimilar Materials

Where preheat is required for one of the parent materials or weld metals it shall be applied to the whole joint.

B1-3.4.11.1 Consumables

All dissimilar metal welded joints should be avoided whenever practical and are not allowed in sour service applications. When proposed, specific authorization must be obtained from the CONTRACTOR. If authorized, dissimilar metal welds should comply with the following guidelines:

All parties consent to this document being signed electronically -PT&CS/GP/INT/2022/5777

a. For dissimilar joints in base metals consisting of carbon and low alloy steels (P-No.1 through P-No.7), the filler metal shall be of the low hydrogen type and compatible with the composition of the lower P-Number.

b. For dissimilar joints in base metals consisting of a ferritic material (P-No.1 through P-No.7) on one side and a high nickel alloy on the other, a high nickel filler material meeting the requirements of ASME Classification ENiCrFe-2, ENiCrFe-3, ERNiCr-3, E/ERNiCrMo-3, E/ERNiCrCoMo-1 should be used with selection consideration being given to requirements for materials being welded, strength, corrosion resistance and differential thermal expansion etc.

c. For dissimilar joints not subject to PWHT in base metals consisting of a ferritic material (P-No.1 through P-No.7) on one side and austenitic stainless on the other, the filler material selection shall be reviewed based on the following guidelines:

   i. For service temperatures up to and including 315°C: ASME Classification E/ER 309L or ENiCrFe-2, ENiCrFe-3, ERNiCr-3, E/ERNiCrMo-3, E/ERNiCrCoMo-1 should be used with selection consideration being given to requirements for materials being welded, strength, corrosion resistance and differential thermal expansion etc.

   ii. For service temperatures above 315°C: High nickel filler material meeting the requirements of ASME Classification ENiCrFe-2, ENiCrFe-3, ERNiCr-3, E/ERNiCrMo-3, E/ERNiCrCoMo-1, should be used with selection consideration being given to requirements for materials being welded, strength, corrosion resistance and differential thermal expansion etc.

d. Where PWHT of the joint is required between stainless steel or high nickel alloys, the ferritic material (P-No.1 through P-No.7) shall be buttered with high nickel filler metal meeting the requirements of ASME Classification ENiCrFe-2, ENiCrFe-3, ERNiCr-3, E/ERNiCrMo-3, E/ERNiCrCoMo-1 should be used with selection consideration being given to requirements for materials being welded, strength, corrosion resistance and differential thermal expansion etc. prior to PWHT and subsequent welding to the austenitic stainless stee or high nickel alloy. Such joints shall be qualified in accordance with fabrication code.

e. For dissimilar joints in base metals consisting of an austenitic stainless on one side and a high nickel alloy on the other, a high nickel filler material meeting the requirements of ASME Classification ENiCrFe-2, ENiCrFe-3, ERNiCr-3, E/ERNiCrMo-3, E/ERNiCrCoMo-1 should be used with selection consideration being given to requirements for materials being welded, strength, corrosion resistance and differential thermal expansion, design/operating temperature etc.

f. High nickel filler metal shall not be used in services that contain sulfur compounds at service temperatures greater than 370°C unless specific authorization is obtained from the CONTRACTOR and the COMPANY.

B1-4 Fabrication

B1-4.1 General

a. The certified inspector shall at all times have access to all parts of the work under contract being performed to ensure the work is being performed in accordance with the specifications and the applicable fabrication code.

All parties consent to this document being signed electronically -PT&CS/GP/INT/2022/5777

b. Mill and shop inspection shall not release the contractor from responsibility of replacing / repairing defective workmanship that may be discovered in the field.

c. Fabrication to this specification shall conform to the requirements of the applicable fabrication code and the requirements of this specification.

d. Compliance with this specification and authorization of WPS, PQR and weld map shall in no way relieve the CONTRACTOR of the responsibility of providing welds which are sound and suited to the services for which they are intended.

e. Welding terms and definitions shall be in accordance with AWS A3.0.

f. Tack welds shall be made by qualified welders in accordance with COMPANY approved procedures and with the same ASME Classification of consumable that is stated in WPS for the root pass.

g. Peening is not permitted.

h. A back purge must be used when using GTAW for the root pass on P-No.4 and higher alloy material.

i. The back purge shall be maintained until at least 6 mm thickness of weld metal has been deposited or the weld joint is filled, whichever is less.

j. Temporary attachments, backing rings or bars intended to be removed after weld completion shall essentially match the chemical analysis of the base metal.

k. Temporary welds shall be made by qualified welders in accordance with COMPANY approved WPS, the area of the weld shall be NDE'd in accordance with the requirements of the adjacent welds, but as a minimum shall include 100%VT and MPI/DPI.

l. Attachments such as lugs, clips, support rings and similar items shall not be located on a weld seam.

m. The shop fabrication of stainless steel and nonferrous materials shall be carried out in a separate partitioned area (preferably a separate shop) completely segregated from that of carbon steels and low alloy steels.

n. Contamination of austenitic stainless steel and nickel alloys by zinc (eg brass, galvanised items etc) and other low melting point metals shall be avoided. Welding of galvanized attachments from which the galvanizing has nominally been removed by mechanical means, or material painted with zinc rich paint, to austenitic stainless steel or nickel alloys is not permitted.

o. No welding shall be carried out when the parts to be welded are wet.

p. No welding shall be carried out during periods of high wind (greater than 8 km/hour), unless the welder and the work are properly protected.

B1-4.2 Weld Identification

a. All weld joints shall be marked for identification by a weld number and a welder symbol. These identifications shall be made with a suitable weather-proof marking material. The markings shall be placed in a location such that they will be easily observed and remain visible for a time suitable to the contractor.

b. The fabricator shall establish and submit for approval an identification system that shall uniquely identify each component and weld joint. The identification system shall be used to identify all examinations, surveys, inspections, etc. This system shall also be used to identify the final position of each piece of pressure- retaining material (including each heat number) in the completed vessel.

B1-4.3 Preheat

All parties consent to this document being signed electronically -PT&CS/GP/INT/2022/5777

a. Preheating shall extend for at least 4x material thickness or 100mm (whichever is the greater) from the point of welding.

b. Preheat shall also be measured on the reverse side were possible.

c. Preheat shall be measurered by calibrated contact digital thermometer, or temperature indicating crayons. Infrared pyrometers shall not be used.

d. Gas-fuelled preheat shall be applied using propane only. Oxy-propane or oxy-acetylene shall not be used for preheating.

e. Preheating shall be in accordance with the requirements of the fabrication code and any additional requirements of this specification. Preheat shall be no lower than the values shown in Table B1.3 below:

Table B1.3 Minimum required preheat temperatures.

MATERIAL	PREHEAT	
	Wall Thickness (mm)	Minimum Temp. (°C) (1)
Carbon and Carbon-Manganese Steels	≤25 >25	20 (2) 80 (2)
Low Nickel Alloy Steels	All	100-150
0.3 - 0.5 Mo Steel	≤20 >20	20 100-150
1 Cr - ½ Mo, 1 ¼ Cr - ½ Mo	All	150
2-1/4 Cr - 1 Mo	All	200
5 Cr - ½ Mo, 9 Cr - 1 Mo	All	200-250
3.5 Ni	All	93

Notes:

i. If ambient temperature is below 5°C, preheat to 40°C is required.

ii. 100°C minimum if UTS is greater than 450 N/mm.

B1-4.4 Post Weld Heat Treatment (PWHT)

PWHT may be required by fabrication code or service conditions as described in Appendix E3.

a. PWHT for process shall be performed when required by piping classes, drawings, purchase order, and when required by Severe Service Appendix 3.

b. PWHT shall be noted on the CONTRACTOR'S drawings.

c. When PWHT is required, furnace PWHT shall be used wherever possible.

d. Post Weld Heat Treatment (PWHT) time and temperature shall be in accordance with the fabrication code.

All parties consent to this document being signed electronically -PT&CS/GP/INT/2022/5777

e. Irrespective of thickness, PWHT soak time shall be no less than one hour.

f. PWHT procedure shall be in accordance with the fabrication code and the following requirements.

g. For joints over 25mm thick, the rate of heating shall not exceed 5500/t °C/hr (where t= maximum section thickness in mm) or 55°C/hr whichever is greater.

h. For joints over 25mm thick, the rate of cool down to 400°C shall not exceed 6875/t °C/hr (where t= maximum section thickness in mm) or 55°C/hr whichever is greater.

i. All temperatures within the heated zone for furnace or localized PWHT shall exceed the specified minimum holding temperature. The actual temperature range for the soak period, as recorded by thermocouples, shall not have a spread of more than 40°C.

j. Welding or heating to joints that have been PWHT'ed requires re-PWHT. Post weld heat treatment, where applicable, shall follow welding and repairs but shall be performed prior to any hydrotest.

k. No weld repairs to joints that have been PWHT shall be carried out without prior approval from CONTRACTOR. Neither shall any re-PWHT be carried out without prior approval from CONTRACTOR.

l. PWHT shall be carried out using one or more of the following types of heat sources:

   i. Permanent or semi-permanent furnaces using gas or oil or electric heaters.

   ii. Electrical resistance heaters.

   iii. Induction heaters.

m. If PWHT is performed in the field, the minimum heating band shall be 5 √(DT) and the minimum insulation width shall be 10 √(DT) where D = inside diameter in mm and T = wall thickness in mm.

n. A maximum of two complete PWHT cycles is permitted for each weld provided the time is suitably qualified. Additional PWHT cycles shall not be performed without approval by the COMPANY.

o. Thermocouples shall be flash welded or mechanically bonded to the equipment pressure boundary.

p. All thermocouple attachments shall be adequately insulated to avoid temperature misreading caused by the effect of radiation.

q. PWHT of materials shall be accomplished after all lugs or attachment welds are complete, unless otherwise approved by COMPANY.

r. The temperature shall be continuously recorded. A chart of the heat up, soak and cool down while at temperature above 260°C is required. Time intervals shall be recorded with temperature.

s. Thread and gasket surfaces shall be suitably protected from excessive oxidation during PWHT.

t. Low alloy steels (P-No. 3 through P-No. 6) shall be cooled from PWHT temperature to 150°C under insulation.

u. For applications where PWHT is required by the service fluid or where hardness limits are specified:

   i. Any reductions in the PWHT temperature or alternative temperatures below the normal holding temperatures listed in fabrication code are not permitted.

   ii. The minimum PWHT soak time shall be 1 hour.

v. If hardness limits are specified, the soak time for production welds shall not be less than 80% of the PQR soak time unless approved by COMPANY.

All parties consent to this document being signed electronically -PT&CS/GP/INT/2022/5777

w. Thermocouples and a calibrated temperature chart recorder shall be used to provide an accurate and legible record of all PWHTs. All charts shall be marked with the date and sufficient information to uniquely identify the vessel (or joint/component for localized PWHT) being heat treated. Multipoint chart recorders shall clearly differentiate/identify each channel/point by use of different colored inks or automatic number stamping.

x. Temperature recorders shall be calibrated every three months and a current calibration sticker shall be maintained on the recorder. The calibration frequency may be extended to 12 months with the approval of contractor if the documented calibration checks for that particular recorder demonstrate acceptable accuracy for a suitable period.

y. Prior to the start of the PWHT, components shall be checked to ensure that all restraints are removed, the component is free to expand and contract, and suitable and sufficient supports are used. In addition, the PWHT chart should be marked, prior to PWHT, with identification number of the weld(s).

z. All machined surfaces, such as flange faces, threaded bolt holes, threads, etc., shall be protected from oxidation during the heat treatment by coating with deoxaluminite or other suitable material.

aa. All PWHT chart records shall be submitted to contractor for review and approval. All records shall be submitted as part of the equipment file for permanent record.

bb. After completion of the PWHT all thermocouples shall be removed and the attachment areas ground smooth to clean and sound metal and the areas shall be examined by MT or PT after grinding.

cc. Controlled atmosphere, if needed to avoid deterioration of material properties, shall be considered when applicable.

dd. Code exemptions for PWHT are not permitted if PWHT is specified for process conditions.

B1-4.5 Weld Joint Design

Weld joint design shall be carried out in accordance with the applicable fabrication code and the applicable Fabrication sections of this specification, specific to piping, pressure vessels and tanks.

B1-4.6 Weld Joint Preparation

a. Weld joint preparation shall be made by machining, grinding, or thermal cutting. When thermal cutting is performed, the joint surfaces shall be mechanically cleaned to sound metal prior to welding by removal of a minimum of 2mm metal.

b. Oxy-fuel thermal cutting shall not be used on P No.6 and higher base materials.

c. Surfaces to be welded shall be clean and free from paint, oil, dirt, scale, oxides, and other foreign material detrimental to the integrity of the weld for a distance of 100mm beyond the substrate surface actually touched by the arc.

d. Stainless steel and nonferrous materials shall be cleaned with alloy compatible grinding wheels or stainless steel brushes not previously used on other materials.

e. Cleanliness shall be maintained during fabrication welding. All stubs, rods, flux, slag, and other foreign material shall be removed from the equipment.

f. Removable starting and stopping tabs shall be used with the SAW process, when practical. The tab material shall be similar to the base material.

g. Grinding wheels and austenitic stainless steel wire brushes used on CRA materials shall not have been previously used on ferrous materials, copper alloys, aluminum or zinc coatings (paint or galvanizing).

All parties consent to this document being signed electronically -PT&CS/GP/INT/2022/5777

h. When an internal coating is specified, all welding must be completed before the internal coating is applied.

B1-4.7 Weld Repairs

a. Unacceptable discontinuities shall be completely removed by chipping, gouging, grinding, or other methods (for the type of material being repaired) to clean, sound metal, and the excavated area shall be examined by magnetic particle (MT) (preferred for ferrous materials) or liquid penetrant (PT) methods to assure complete removal of defects.

b. Repairs to correct weld defects shall be made using the same weld procedure as used for the original weld. A separate WPS shall be required with the following information.

   i. Method of excavation

   ii. Shape and size of excavation prior to welding

   iii. Inspection prior to welding

   iv. Weld procedure to be used (if different from original)

   v. Min ligament after part wall excavation

c. Using carbon arc gouging for materials other than carbon & carbon manganese steel is not approved.

d. Where a different welding procedure is to be used for repair welding (e.g. SMAW for the repair of SAW welds) a procedure shall be qualified in accordance with this standard

e. The repaired areas shall be re-examined using the same examination method and procedure by which the defect was originally detected, when approved by CONTRACTOR.

f. Two repair attempts will be allowed on any one defective area. No further attempts to repair shall be carried out without the authorization of the CONTRACTOR.

g. Any weld not meeting the acceptance criteria of the applicable code or standard shall be cut out or repaired. Other methods, such as sleeving, shall not be permitted.

h. When specific qualification is required for partial penetration weld repairs Figure B1.2 shall apply.

All parties consent to this document being signed electronically -PT&CS/GP/INT/2022/5777

Figure B1.2 Location of Partial Penetration Weld Repairs.

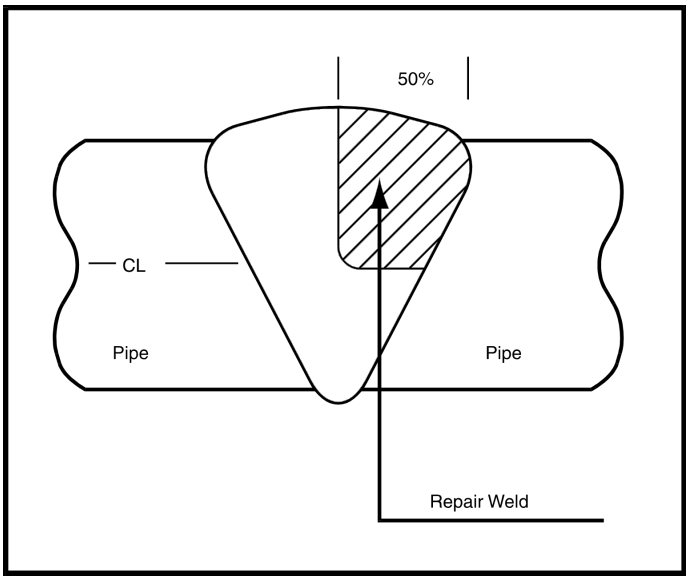

Notes:

i. Where impact testing is required, both sides of repair shall be tested as described in B1-5.12.

ii. Where repair qualification if required through thickness repair shall not qualify partial thickness.

B1-5 NDE and Testing

B1-5.1 Inspection Personnel

a. Personnel performing inspection to this specification shall be qualified in accordance with the fabrication code and ASNT Recommended Practice SNT-TC-IA or PCN. Qualification records for each qualified individual shall be submitted to COMPANY prior to the individual performing examinations.

b. Inspection personnel shall be certified to ASNT Level II or PCN (Level II) and shall have a minimum of 2 years experience relevant to the project work scope.

c. ASNT Level II Technicians shall have been examined and certified by ASNT Level III examiners. Certifications by the Subcontractor appointed Level III examiners who do not have valid ASNT Level III certification in the relevant method shall not be acceptable.

d. Personnel interpreting radiographs shall have valid ASNT or PCN certification in film interpretation and shall have a minimum of 5 years experience.

e. The following shall be submitted to COMPANY for approval prior to the commencement of any production inspections.

   i. A qualification certificate for each inspector.

   ii. A procedure including a sample of the Subcontractor's reporting method.

All parties consent to this document being signed electronically -PT&CS/GP/INT/2022/5777

iii. The Subcontractor's Project Quality Control organisation chart that indicates reporting order and quality procedures.

B1-5.2 Calibration

All equipment for measurement of welding variables, execution of PWHT, consumable storage and NDE or other required measurements of control shall be calibrated at east every 12 months. Calibration shall be performed by a suitable organisation using standards traceable to national standards.

B1-5.3 Non-Destructive Examination (NDE) General Requirements

a. Required NDE shall be noted on the data sheets/drawings and Purchase Orders.

b. All NDE methods, acceptance criteria, and general requirements shall be in accordance with the applicable fabrication code and shall be detailed on the ITP.

c. All the NDT shall be performed in accordance with qualified and approved NDT procedures and using calibrated instruments/equipment as per the requirements of the fabrication code.

d. NDE procedures shall be approved by COMPANY.

e. CONTRACTOR shall supply all labour and materials necessary to perform NDE.

f. Extension beyond minimum NDE coverage by design code can be specified based on criticality rating assessment (AGES-SP-13-001).

g. A rejection by the CONTRACTOR shall be final. All weld rejections shall be documented and a repair disposition made prior to performing the weld repair.

h. The CONTRACTOR and COMPANY shall at all times have free access to the site while the work covered by the contract is in process. The VENDOR shall afford the CONTRACTOR all reasonable facilities for ensuring that the work is being carried out in accordance with the requirements of this Specification.

i. All associated costs due to repairs as a result of NDE, and any additional NDE required to assess the extent of defects, shall be by fabricator.

j. The final NDE of welds for acceptance purposes shall be carried out after completion of post weld heat treatment (PWHT), if applicable. If the VENDOR elects to check the weld quality before PWHT by radiography, an ultrasonic examination after PWHT can be substituted for radiography subject to approval by COMPANY.

B1-5.4 Visual Examination

a. Visual inspection of all completed welds shall be made in accordance with the fabrication code, this specification, or purchase order/drawings.

b. The visual acceptance of each weld shall be recorded by the contractor.

c. Examinations shall be performed as a minimum light level of 500lux or higher if stipulated elsewhere.

d. Inspector shall have performed the necessary sight acuity tests.

B1-5.5 Magnetic Particle Examination (MT)

a. The magnetic particle examination procedure and acceptance criteria shall be in accordance with the applicable fabrication code.

All parties consent to this document being signed electronically -PT&CS/GP/INT/2022/5777

b. Only wet ultraviolet fluorescent or wet colour contrast (white ink) methods shall be used.

c. The magnetic yoke method shall be used.

d. Magnetic particle examination of welds shall include a band of base metal at least 25 mm wide on each side of the weld.

e. The sensitivity of the method employed shall be demonstrated, prior to acceptance of the MPI procedure by means of a calibrated Burmah-Castrol strip type 1 (or equivalent), and/or suitable sample welds.

B1-5.6 Liquid Penetrant examination (PT)

a. The liquid penetrant examination procedure and acceptance criteria shall be in accordance with the applicable fabrication code.

f. Penetrant materials shall meet the requirements of ASME Section V, Article 6 for sulfur and halogen content regardless of the type of material to be examined.

g. Liquid penetrant examination of welds shall include a band of base metal at least 25 mm wide on each side of the weld.

h. Ammonia and chloride free, color contrast, non-stain removable penetrant shall be used.

i. Examinations shall be performed as a minimum light level of 500lux or higher if stipulated elsewhere.

j. Inspector shall have performed the necessary sight acuity tests

B1-5.7 Ultrasonic Examination (UT)

Ultrasonic examination procedures shall be in accordance with the requirements and methods specified in the applicable section of the fabrication code.

B1-5.8 Radiographic Examination (RT)

a. The Radiographic Examination procedure and acceptance criteria shall be in accordance with the applicable fabrication code.

b. Radiographic inspection shall be carried out by an independent third party unless agreed to in writing by COMPANY. The location and final interpretation of the radiographs shall be the responsibility of the CONTRACTOR'S representative.

c. Equal number of radiographs shall be taken from work of each welder in proportion to the length of joints welded by each welder for spot/ percentage radiography requirements.

d. If the joint is required to be radiographed and radiography is not feasible; then, computerized advanced ultrasonic methods that produce a permanent record may be used in lieu of radiography. The application of ultrasonic testing in lieu of radiography shall be approved by COMPANY.

B1-5.9 Production Hardness Testing

a. Personnel performing hardness testing shall be familiar with all hardness testing procedures and test methods.

e. Procedures and test methods used for portable hardness testing shall be in accordance with ASTM A833 or ASTM E110 as applicable.

All parties consent to this document being signed electronically -PT&CS/GP/INT/2022/5777

f. A hardness test shall consist of three hardness readings in the deposited weld metal. The average of these three readings shall be reported as the test result.

g. Hardness tests shall be performed on the side exposed to the process fluid when possible.

h. Hardness testing results shall be expressed in Brinell numbers. The hardness report shall indicate actual hardness reading for the test method used plus Brinell conversion. The use of methods other than portable Brinell tester require CONTRACTOR approval. Conversion shall be in accordance with ASTM E140.

i. Hardness tests shall be performed after PWHT when PWHT is required.

j. The hardness test report shall indicate type of hardness tester, personnel conducting hardness tests, type of material, and last calibration date.

k. The COMPANY`s representative may witness the performance of production hardness testing. The documented test results shall be submitted to the CONTRACTOR when requested.

B1-5.10 Positive Material Identification (PMI)

PMI testing shall be performed when required by and in accordance with AGES-GL-13-002 Positive Material Identification of Equipment and Piping Guidelines

B1-5.11 Ferrite Testing

Ferrite testing shall be performed on austenitic stainless steel. The Ferrite Number (FN) shall be between 3-10 FN as determine by a magnetic instrument such as a Severn gauge or ferrite scope calibrated in accordance with AWS A4.2, ISO 8249, or calculated using the Welding Research Council (WRC) 1992 Ferrite Diagram. Documentation of test results shall be available for review by the CONTRACTOR.

B1-5.12 Charpy V-Notch Impact Testing (CVN)

Welding procedure qualification Charpy V-Notch impact tests shall be performed when required by this specification and the fabrication code.

All parties consent to this document being signed electronically -PT&CS/GP/INT/2022/5777

B2 SECTION B (PART 2) – WELDING AND NDE OF PIPING SYSTEMS

This section defines the welding, thermal treatment, NDE and testing requirements for fabrication of piping.

This section shall be read in conjunction with the General requirements of Section B1. This section details additions and modifications to Section B1.

B2-1 Documentation

No additional requirements. Refer to with General Section B1 for documentation requirements.

B2-2 Qualification

B2-2.1 Welding Procedure Qualification (Specific to Piping)

Welding procedures for the fabrication of piping shall be qualified in accordance with General Section B1-2 for qualification and the following additional requirements:

a. Welding procedure qualification for austenitic stainless steel shall also include:
   i. Corrosion testing equivalent to that required for the base material.
   ii. Ferrite count to ASTM E562 in the weld metal, centerline and HAZ at root and cap at the following positions:
      1. <4mm thickness – Mid thickness
      2. <6mm thickness – Root and cap
      3. >=6mm thickness – Root, mid thickness and cap

b. Acceptance criteria shall be 3-10 FN for austenitic stainless steels and 35-65% for duplex stainless steels.

c. Micrographic examination: For 5G/6G: 2 off representing min and max heat input (1 off for other positions). Microstructure of weld and HAZ to show appropriate phase distribution and absence of microphases considered deleterious to mechanical or corrosion properties. Photomicrographs to be provided of each region (typically 250X) with the WPQR.

B2-3 Welding Processes, Welding Consumables, Welding of Materials

No additional requirements. Refer to General Section B1.

B2-4 Fabrication

B2-4.1 General

Fabrication of piping shall be carried out in accordance with General Section B1-4 and the following additional requirements:

a. All fillet (including slip-on flanges and non-pressure attachments) and socket welds shall be two- (2) pass minimum unless otherwise agreed to by the CONTRACTOR and the COMPANY.

b. Frontal gap (1.6mm minimum) for socket welds shall be ensured.

All parties consent to this document being signed electronically -PT&CS/GP/INT/2022/5777

c. Piping requiring special cleaning shall have the root pass deposited with the gas tungsten arc process. The backside of the root pass shall be purged with inert gas.

d. For piping welds on P-4 up to P-8 material, the root pass shall be made with the GTAW process and an inert back purging gas. The back purge shall be maintained until at least 6 mm thickness of weld metal has been deposited or the weld joint is filled, whichever is less

e. Open-root welds, made with SMAW (except E6010 when allowed) electrodes or GMAW (Spray or Globular Transfer) require back gouging and re-welding.

B2-4.2 Post Weld Heat Treatment (PWHT)

a. PWHT requirements for piping in sour wet H2S service is a mandatory requirement and shall be in accordance with Appendix 3 for Severe Service.

b. For locally heat treated piping, the minimum number of thermocouples to be used is as follows:

i. for pipe diameters < 100 mm, minimum one Thermocouple.

ii. for pipe diameters >100 to 300 mm, minimum two thermocouples.

iii. for pipe diameters > 300 mm, minimum four thermocouples.

B2-5 NDE and Testing

NDE of piping shall be carried out in accordance with General Section B1-5 for NDE and the following requirements:

B2-5.1 Minimum Extent of NDE

NDE shall be as a minimum as required by the fabrication or as detail on the fabrication drawings but shall be no lower than the values shown in Table B2.4.

All parties consent to this document being signed electronically -PT&CS/GP/INT/2022/5777

Table B2.4 Minimum Extent of NDE

Material	Service	ANSI Class	INSPECTION LEVELS, %		
			RT	MT	PT
Carbon Steel including 0.3 Mo and 0.5 Mo	Utility: Utility:	150 300/600	5 10	5%	
	Process: Liquid Gas	All ratings	100	10	
	Process: HC	All ratings	100	100	
	Process: All Other Services	150 - 600	10	10	
		> 900	100	30	
Ferritic Alloy Steel not Including 0.3 Mo and 0.5 Mo Steel	All Services	All ratings	100		100
Austenitic Alloy Steel	Process: Liquid Gas, and HC	All ratings	100		100
	All Other Services	150	5		5
		300	10		10
		≥ 600	100		100
Dissimilar Metal Weldments	All Services	All Ratings	100		100

B2-5.2 Progressive Examination

When progressive examination in accordance with the fabrication code is required, then the following additional requirements shall apply:

a. The joints selected shall be evenly distributed on site and field welds, for each welder, each line number. COMPANY/ CONTRACTOR shall be consulted in selection of the joints.

b. If any of the items examined in accordance with the fabrication code reveals a defect, then the welder or welding operator shall be considered unacceptable for any further welding to that Welding Procedure Specification (WPS) with respect to the CONTRACTOR'S work done to this Specification without requalification and the agreement of the CONTRACTOR.

c. Timing is essential for the control of welder or operator quality; therefore, the progressive examinations required by the fabrication code shall be completed within 16 working hours or 2 working days as applicable of the first rejection, unless otherwise agreed to by the CONTRACTOR and the COMPANY.

d. Welders shall not be permitted to weld production joints of any type while waiting for results of qualification.

All parties consent to this document being signed electronically -PT&CS/GP/INT/2022/5777

B2-5.3 Ultrasonic Examination (Specific to Piping)

a. A specific UT procedure for inspection of Section K High Pressure Piping shall be included.

b. For P No.1 and P No.4 piping of thickness 40 mm and above, 100% ultrasonic examination shall be required on butt welds in addition to the specified radiography examination.

c. Where a joint configuration involves tapering either internally or externally inside the scanning area, or there is limited access (e.g. fittings/valves), the UT procedure shall clearly demonstrate that full inspection of the weld can be performed and any limitations stated.

d. Ultrasonic examination shall be regarded as a complementary examination to the radiography for the detection of “Planar Flaws”.

e. The COMPANY may use the services of an independent inspection company to perform random Ultrasonic Inspection crosschecks on welds designated by COMPANY welding inspector, any welds found defective by this inspection will be repaired or removed at the contractor expense. The applicable UT procedure and operator may be subject to re-qualification.

f. Phased Array Ultrasonic testing may be carried out as per code case 181 of ASME B31.3 for thickness greater than 6 mm. Ultrasonic examination of welds shall be performed in accordance with BPV Code, Section V, Article 4. For wall thicknesses less than 25 mm, the acceptance criteria stated in para. 344.6.2 of B31.3 shall be used. The calibration blocks used shall be as per ASME Sec. V Article 4 Mandatory Appendix IX. The procedure validation shall be done on a test piece with known diameter and thickness and defect size and locations and Witnessed by Third Parity Inspection. PAUT can be used in lieu of Radiography through COMPANY approval only.

g. For circumferential weld inspections on small bore piping (outside diameter 0.84" to 2") and other piping sizes up to outside diameter 4", specially developed slim designed semi-automated phased array probes/scanners may be used for PAUT, provided that the qualified procedure and calibration is demonstrated to COMPANY representative. COMPANY approved TPI shall witness and endorse the procedure qualification and calibration.

B2-5.4 Radiographic Examination (Specific to Piping)

All the results of any radiography examination carried out before PWHT by the VENDOR shall be submitted as well for the review of the CONTRACTOR. Please note this does not remove the requirement for final acceptance NDT examinations, which is required after PWHT.

B2-5.5 Production Hardness Testing

a. Production hardness testing for piping in sour and HIC services shall be in accordance with Appendix 3 of this Specification.

b. Production hardness testing is not required for carbon steel piping in utility service (steam, water or air).

c. For piping in general service, requiring PWHT, production hardness tests are required for P-No.1 and P-No.3 through P-No.6 materials, on 10% of welds in each furnace heat-treated batch and 100% of those, which are locally heat-treated. Hardness results shall not exceed 225 HB for P-No.1, P-No.3 and P-No.4 materials and 241HB for P-No.5 and P-No.6 materials.

d. ADD: If any welds are found to be unacceptable, then two additional welds from the same lot shall be tested. If more than one weld in a lot is found to be unacceptable, then all welds in that lot shall be tested.

All parties consent to this document being signed electronically -PT&CS/GP/INT/2022/5777

B2-5.6 Ferrite Testing

a. Ferrite testing shall be performed on welding procedure qualification or on two weld joints pertaining to each welding procedure specification.

b. All austenitic stainless steel welds with design temperature over 427 °C or requiring PWHT, shall be subjected to a minimum of 3 ferrite checks per weld with a minimum of one check per 200 mm length of manual welds.

All parties consent to this document being signed electronically -PT&CS/GP/INT/2022/5777

B3 SECTION B (PART 3) – WELDING AND NDE OF PRESSURE VESSEL AND HEAT EXCHANGERS

This section defines the welding, thermal treatment, examination and testing requirements for shop fabricated pressure vessels and heat exchangers in accordance with ASME VIII Div 1 & 2.

This section shall be read in conjunction with the General requirements of Section B1. This section details additions and modifications to Section B1.

B3-1 Documentation

No additional requirements. Refer to with General Section B1-1 for documentation requirements.

B3-2 Qualification

No additional requirements. Refer to with General Section B1-2 for qualification requirements.

B3-3 Welding Processes, Welding Consumables, Welding of Materials

No additional requirements. Refer to General Section B1.

B3-4 Fabrication

B3-4.1 General

Fabrication of pressure vessels shall be carried out in accordance with General Section B1-4 for fabrication requirements.

B3-4.2 Post Weld Heat Treatment (PWHT)

a. The specified PWHT shall be applied over an area extending at least 6 times the thickness of the material being welded from each edge of the weld but not less than25 mm from each edge of the weld, whichever is greater.

b. For PWHTs that are not performed in a furnace, insulation shall be applied a minimum of 300 mm on either side of the weld where PWHT to be done. The insulation shall not be removed before the temperature has cooled to below 150°C. The internal surface must also be insulated to avoid lowering the temperature on the inside surface of the joint.

c. Thermocouple locations shall include both the inside and outside surfaces of the vessel for weld thicknesses in excess of 75 mm. For all vessels PWHT in a furnace, the thermocouple locations shall include:

   i. The thinnest major component.

   ii. The thickest member.

   iii. The top of the vessel (as oriented during PWHT).

   iv. The bottom of the vessel (as oriented during PWHT).

d. The procedure qualification test coupon shall be subjected to PWHT essentially equivalent to that encountered in the fabrication of production welds. The PWHT total time(s) at temperature(s) should be applied in one heating cycle. The number of cycles of simulated PWHT shall include: the PWHT required for the equipment fabrication; one cycle for shop repair; and one extra cycle of PWHT for future modification / plant repair, giving a total of three cycles.

All parties consent to this document being signed electronically -PT&CS/GP/INT/2022/5777

e. For special applications such as wall thickness greater than 60 mm or work pieces of very complicated shape or with double wall, the temperature at time of insertion shall not exceed 300°C.

f. The number and location of thermocouples shall be in accordance with the applicable ASME Code, but a minimum of three shall be used, attached to the thickest and thinnest weldments of the pressure boundary. All thermocouple attachments shall be adequately insulated to avoid temperature misreading caused by the effect of radiation.

B3-5 NDE and Testing

NDE of pressure vessels shall be carried out in accordance with General Section B1-5 and the following requirements:

B3-5.1 Magnetic Particle Inspection (Specific to Pressure Vessels)

PWHT vessels require 100% MT examination of the following after PWHT:

a. The full length of all welds attaching nozzles, branches and compensating pads to shell and heads.

b. Full length of all other attachment welds to pressure parts for all vessels of ratings 600 Lbs and above.

c. 10 % of the length of all other attachment welds to pressure parts for all vessels of ratings below 600 Lbs.

B3-5.2 Liquid Penetrant Examination (Specific to Pressure Vessels)

Austenitic steel vessels require 100 % PT examination of all welds attaching nozzles, branches and compensating plates to shell and all other attachment welds to pressure parts before hydro-testing. All the equipment welded joints in Amine Service shall be fluorescent penetrant tested in addition to radiographic examination.

B3-5.3 Ultrasonic Examination (Specific to Pressure Vessels)

a. When 100% radiograph is specified, all non-radiographable nozzle to shell / head welds shall be 100% UT examined after PWHT prior to hydrotest.
b. In addition to RT examination, all ferritic vessels having a wall thickness greater than 50 mm shall be 100 % UT examined before and after PWHT.

B3-5.4 Radiographic Examination (Specific to Pressure Vessels)

a. Where Spot Radiography is specified, the examination shall include a minimum of ten percent (10%) of the total length of weld. Spots shall be selected so that each welder, each welding process and each longitudinal and circumferential seam is represented in the examination. All requirements specified for Spot Radiography per UW-52 must also be met. The CONTRACTOR'S inspector must agree to the spot locations.
b. All weld intersections shall be 100% radiographed.
c. For PWHT vessels of thickness equal or less than 50 mm, 100 % radiographic examination is required after PWHT. For acceptance purpose for PWHT vessels of thickness greater than 50 mm, 100 % RT examination or Time Of Flight Diffraction (TOFD) UT examination is required before and after PWHT.

All parties consent to this document being signed electronically -PT&CS/GP/INT/2022/5777

B3-5.5 Use Of Ultrasonic Testing In Lieu Of Radiographic Testing

a. This chapter establishes the requirements when it is desired to utilize UT in lieu of RT for examination of welds of pressure vessels fabricated in accordance with this supplement. The requirements as outlined are amendments / supplements to UT used in lieu of RT requirements mentioned in ASME BPVC Section VIII, Div2 for pressure vessels manufactured from Cr-Mo steel (1¼Cr-½Mo, 2¼Cr-1Mo, 2¼Cr-1Mo-¼V and 3Cr-1Mo).
b. During the design phase, the CONTRACTOR shall ensure that the design will enable the use of UT in lieu of RT during the construction of code-compliant pressure equipment. This shall involve aspects such as geometry of design, selection of attachments, use of reinforcing, attachments, and support design. It should also include consideration of field restrictions such as relative location of structural steel and concrete.
c. The CONTRACTOR shall consult with the COMPANY to specify the general scope and requirements for the use of UT in lieu of RT for the project. Where proposed, the decision to use UT in lieu of RT in code construction of pressure equipment shall be made in the FEED stage of the project which shall be subject to COMPANY approval on a case-by-case basis.

B3-5.6 Production Hardness Testing (Specific to Pressure Vessels)

For P-No. 1 materials requiring a PWHT, hardness testing is required. One test from each longitudinal and circumferential weld seam is required. In addition, one test shall be made on at least one nozzle flange-to-neck and nozzle neck-to-shell/head weld. Each welding procedure used shall be tested. Hardness results shall not exceed 248 Hv10 on base metal, Heat affected Zone and Weld.

B3-5.7 Ferrite Testing

The ferrite content of production weld overlay deposits shall be checked at a frequency of five per shell course, five per head, and one per nozzle.

All parties consent to this document being signed electronically -PT&CS/GP/INT/2022/5777

B4 SECTION B (PART 4) – WELDING & NDE OF STORAGE TANKS

This section defines the welding, thermal treatment, NDE and testing requirements for shop and field fabricated API storage tanks.

This section shall be read in conjunction with the General requirements of Section B1. This section details additions and modifications to Section B1.

B4-1 Documentation

No additional requirements. Refer to with General Section B1 for documentation requirements.

B4-2 Qualification

Welding procedures and welders used for the fabrication of tanks shall be qualified in accordance with General Section B1-2 and the following additional requirements:

B4-2.1 Sample Profiles

For tanks which are internally coated, a presentation of NACE Standard Practice 0178 finished weld profiles or actual grinding samples from the VENDOR to the CONTRACTOR are required prior to final award of the Purchase Order. Agreement is necessary prior to welding procedure approval. Samples of actual welds or the NACE comparator representing these requirements shall be at the site where fabrication is being carried out.

B4-2.2 Weld Procedure and Performance Qualification

a. For qualification of impact tested procedures, the weld metal shall show at least a Charpy V-notch impact value of 27 J (for full size 10x10 specimen) at the relevant impact test temperature of the plate or a higher impact value when required by API STD 650 / 620.
b. All field welding of tank plates, steel framing, structural attachments and mountings done in the field shall be carried out by qualified welders or welding operators. The welders and welding operators employed shall satisfactorily pass welding tests as prescribed in API STD 650 / 620. The VENDOR shall furnish to the CONTRACTOR, certificates of completion issued by an independent inspection authority. All welders shall have a welding certificate with photograph. Welders or welding operators without a certificate will not be allowed to weld.

B4-3 Welding Processes, Welding Consumables, Welding of Materials

This section shall be read in conjunction with General Section B1 and the following:

B4-3.1 Acceptable Welding Processes

Welding processes approved for tanks shall be as per General Section B1 and the following additional requirements:

a. Other welding processes, such as Gas Metal Arc Welding - Short Circuit Transfer, (GMAW-S) Manual Submerged Arc Welding, Electroslag Welding and Flux Cored Arc Welding require specific written approval from the CONTRACTOR. These processes shall not be assumed acceptable by the VENDOR.

All parties consent to this document being signed electronically -PT&CS/GP/INT/2022/5777

b. If GMAW-S process is approved for a particular application it shall be limited to:

   i. Carbon steel only.

   ii. 0.9 mm minimum wire diameter.

   iii. 19.5 volts minimum.

   iv. Root pass only.

c. The first five welds of every welder, evenly spread over diameters, wall thickness, materials, positions, weld preparations, etc. shall be 100% inspected by RT or UT. With good results and previous experience, the normal rate of inspection can be resumed.

d. If FCAW process is approved for a particular application it will be limited to:

   i. Carbon steel only.

   ii. Gas shielding is required.

   iii. On open butt joints, weld-out only. Not acceptable for open groove joint root passes.

e. For wall thickness greater than 10 mm and in the down hand position, the filling and capping shall be performed by the spray arc metal transfer mode, with either solid or FCAW. Welding shall be carried out in a protected environment (building, tent, etc.).

f. SAW is not recommended for repair welds of storage tanks in order to avoid the inherent arc instability at the start and stop locations

g. FCAW and SAW may be used for horizontal seams when demonstrated by the welding procedure tests that the welding process is producing full penetration and full fusion. The welding procedure tests shall be executed in a test frame on plates with a minimum length of 3 m under restrained conditions. After depositing the root layer(s), these layer(s) shall be inspected for cracks. The impact values required for the weld metal and the heat-affected zone as required by API STD 650 / 620 shall be obtained in the welding procedure tests.

h. Welding of vertical seams with automatic welding processes requires written approval of the CONTRACTOR and COMPANY. The welding procedure test shall show full fusion is consistently obtained. The impact values required for the weld metal and the heat-affected zone as specified in API STD 650 / 620 shall be obtained in the welding procedure tests.

B4-4 Fabrication

Fabrication of tanks shall be carried out in accordance with General Section B1-4 and the following additional requirements:

a. Open-root welds, made from one side with low hydrogen electrodes, GMAW (Spray or Globular Transfer) or FCAW require back gouging and re-welding.

b. Temporary fabrication attachment welds on pressure shells shall be removed. The surface under such welds and under backing rings that have been removed shall be properly conditioned to eliminate surface stress risers. These surfaces shall be inspected by the magnetic particle method for ferrous materials or the dye penetrant method for CRA materials in accordance with the applicable section of this specification.

c. The sequence employed for the tack welding and final welding of the bottom, shell and roof plates shall be arranged to minimize distortion due to weld shrinkage. The sequences shall be approved by the CONTRACTOR before erection starts.

All parties consent to this document being signed electronically -PT&CS/GP/INT/2022/5777

d. The weld metal on both sides of all butt joints, except offset faces of horizontal joints of unequal plate thickness, shall be built up in the form of an overlay so that all the finished face in the area of fusion shall extend above the surface of the adjoining plates without exceeding the maximum reinforcement requirements of the fabrication code.

e. Unless otherwise specified, all welded attachments shall be fully seal welded. Where required, drain holes shall be provided.

f. All bottom plate lap joints shall be fully fillet welded on the top side only. If a full fillet weld cannot be achieved in one pass, the fillet weld shall be made in two passes.

B4-4.1 Weld Joint Design

a. All shell and cone roof joints shall be full penetration, double welded butt joints.

b. Shell to bottom fillet welds shall consist of a minimum of two passes on each side.

c. All production bottom plate welds shall be full fillet welds as defined in the applicable section of API STD 650 / 620.

B4-4.1.12 Joints in Tank Bottom Plates

a. All joints in bottom plates shall be lapped. The minimum lap shall be five times the thickness of the plate.

b. There shall be a minimum lap of 65mm between the bottom plates and the bottom annular plates.

c. The radial seams connecting the ends of the bottom annular plates shall be butt welded using a 5 mm thick backing strip to achieve full penetration of the weld.

d. Bottom to Shell Plate Joint

e. The lower shell plates shall be welded to the bottom annular plates by continuous fillet welds on both sides.

f. The leg length of both fillet welds shall be equal to the thickness of the bottom annular plates, except when the shell plate thickness is less than the bottom annular plate thickness, in which case the leg length of each filet weld shall not exceed the thickness of the shell plate by more than 1.5 mm.

B4-4.1.13 Shell Butt Joints

a. All seams shall be butt-welded from both sides of the plate.

b. In single-vee or single-bevel butt joints, the vee or bevel shall be made on the outside of the tank, unless otherwise agreed to by the CONTRACTOR.

B4-4.1.14 Cone Roofs

All seams shall be butt-welded from both sides of the plate.

B4-4.2 Weld Joint Preparation

a. Tack welds used in the vertical joints between shell plates, and in the horizontal joint between the bottom course of shell plates and the bottom plates, during the assembly of the tank, shall be removed and shall not remain in the finished joints.

All parties consent to this document being signed electronically -PT&CS/GP/INT/2022/5777

b. Tack welds in the horizontal joints between shell plates, and in the joints between roof plates and shell plates, need not be removed provided that they are sound and free from cracks, that the covering beads are thoroughly fused into them, and that the quality of the welding is to the satisfaction of the CONTRACTOR'S representative.

c. The parts to be joined by fillet welds shall be brought together as closely as practical. The gap between faying surfaces of lap joints should not exceed 1.5mm. If the separation is greater than 1.5mm after straightening and assembly, the leg of the fillet weld shall be increased by the amount of separation but shall not exceed 6mm. The gap shall not exceed 3mm.

B4-4.3 Thermal Treatment; Pre And Post Weld Heat Treatment

a. The following requirements shall be adhered to for medium high tensile steel:

   i. All seams of plates over 19mm in thickness shall be preheated throughout to a temperature of 50°C minimum.

   ii. For temporary welds, tack welds and manual repairs on plates over 19mm in thickness, these plates shall be preheated to a temperature of 100°C minimum.

b. The following requirements shall be followed for preheating:

   i. The minimum width of the heated zone shall be 2T (T = wall thickness) or 100mm whichever is greater.

   ii. Special attention shall be paid to the extent of heated bands in order not to aggravate the problems related to residual stress distribution, such as cracking, buckling and distortion.

   iii. For preheat temperatures above 200°C (regardless of thickness) or material with thicknesses greater than 25 mm with preheat temperature at or above 80°C, preheating shall be done by electric resistance or induction heating.

c. PWHT for tanks in special service conditions the service shall be noted on the CONTRACTOR'S tanks drawings and/or data sheets.

d. PWHT of P-No.1 through P-No.6 materials shall be accomplished after all lugs and all attachment welds are complete.

   i. The number and location of thermocouples shall be in accordance with the applicable fabrication code, but a minimum of three shall be used, attached to the thickest and thinnest weldments of the pressure boundary.

B4-4.4 WELD REPAIRS

Care must be taken to ensure no distortion of localized area occurs during weld repair.

B4-4.5 Lap Welded Tank Bottoms

a. 600mm of lap weld shall be fabricated for test specimens. This test joint shall be made using the same fabrication (electrode, plate, and weld procedure) as for the production joint.

b. Three tensile test strips 75 mm by 450 mm shall be cut from the test weld. The minimum breaking load of the strips shall be at least 70 percent of the minimum ultimate strength of the un-welded plate. Each weld shall indicate at least 95 percent shear fracture.

All parties consent to this document being signed electronically -PT&CS/GP/INT/2022/5777

c. Three cross sections of the test plate weldment shall be polished and etched sufficiently to show the weld's penetration into the base material. Full fusion shall exist throughout each cross section. If the first pass destroys the vertical edge of the lap weld, a minimum of 2.5 mm peak penetration into the bottom plate shall be shown.

B4-5 NDE and Testing

B4-5.1 Non-Destructive Testing (NDE) Specific to Tanks

NDE and testing of tanks shall be carried out in accordance with General Section B1-5 and the following requirements:

B4-5.1.1 Visual Examination

a. The reinforcement of the welds on all butt joints on each side of the plate shall not exceed as specified in applicable section of API STD 650 / 620.

b. Each vertical weld seam shall be checked minimum once, for horizontal weld seams / check per plate shall be performed. All results shall be documented. All locations to be chosen by COMPANY.

B4-5.1.2 Ultrasonic Examination

c. The acceptance criteria shall be in accordance with ASME Section VIII, Division 1 - Appendix 12.

d. For automatic vertical welding, 100% ultrasonic inspection shall be applied, in addition to the required radiographic inspection. The technique used shall be in accordance with ASME Section V, Article 4.

e. Automated Ultrasonic examination with computer based data acquisition is acceptable in lieu of Radiography, in accordance with API 650 Annex U. Final data package shall be reviewed by UT Level-III individual qualified documented procedure and strategy shall be made available to COMPANY. This requires specific approval by COMPANY and may require successful test/ demonstration of the technique.

B4-5.1.3 Radiographic Examination

a. For medium to high-tensile steels an X-ray apparatus shall be used as sources of radiation. The technique shall comply strictly with ASME Section V. The type of film shall be ultra fine grain Class I (Agfa D4 or Kodak M). Intensifying salt screens shall not be used. The radiographic technique used shall detect any differences in metal thickness to within 2% of the total thickness of the section under examination.

b. When defects are located in a vertical seam, two additional locations in the same seam shall be examined in order to determine the limits of the defective welding. These locations shall be on either side of the original area. The two additional locations shall be selected by the CONTRACTOR'S representative. If the weld at either location does not conform to the minimum quality requirements, the vertical weld seam shall be fully radiographed.

c. All tanks fabricated of medium high tensile steel and all tanks with a joint efficiency of 1.00, shall have shell butt welds radiographically inspected to the following minimum extent:

   i. 5% of the vertical seam length for plates 13mm thick and less.

   ii. 10% of the vertical seam length for plates over 13mm thick up to 25mm thick.

   iii. 20% of the vertical seam length for plates 25mm thick and over.

All parties consent to this document being signed electronically -PT&CS/GP/INT/2022/5777

iv. 2% of the horizontal seam length for plates 13mm thick and less.

v. 5% of the horizontal seam length for plates over13 mm thick.

d. For bottom annular plates, applicable section of API STD 650 / 620 shall apply. Inspection of tank bottom welds, reinforcement plate welds, vacuum testing shall be in accordance with applicable section of API STD 650 / 620.

B4-5.2 Production Hardness Testing

Hardness testing for tanks in sour or severe service shall be in accordance with the Severe Service appendix E3 in this specification.

B4-5.2.1 General

For P-No.1 materials, hardness testing is required where automatic or semiautomatic welding processes are used. One test from each 3 m of longitudinal and circumferential weld seam is required. In addition, one test shall be made on each nozzle flange-to-neck and nozzle neck-to-shell weld. Each welding procedure used shall be tested. Hardness results shall not exceed 200 HB.

B4-5.3 Charpy V-Notch Impact Testing (CVN)

Welding procedure qualification Charpy V Notch impact tests shall be performed when required by and in accordance with API STD 650 / 620.

All parties consent to this document being signed electronically -PT&CS/GP/INT/2022/5777

SECTION E

E1 APPENDIX E1– WELDING & NDE REQUIREMENTS FOR WELD OVERLAY

This Appendix defines the method, procedure, and acceptance criteria for fabrication of weld overlay. Requirements of this appendix are stated as additions to the applicable welding code; if a requirement is not stated, then the applicable code requirements apply.

E1-1 Welding Procedure Specifications (WPS)

The WPS shall indicate the minimum deposit thickness qualified and the minimum number of layers required. The number of layers used for the Procedure Qualification Record (PQR) shall be recorded and shall be the minimum number of layers specified on the WPS and used in production.

WPS is required to contain all essential variables of the applicable welding code and applicable requirements of this supplement.

E1-2 Welding Procedure Qualification

Welding Procedure Qualifications Record (PQR) shall include chemical analysis and ferrite testing of the deposited weld metal. The weld metal chemistry and ferrite content shall meet the requirements of Paragraph E1-8.1of this supplement.

PQR testing shall include liquid penetrant examination. The surface examined shall meet the requirements of Paragraph E1-9.2 of this supplement.

E1-2.1 Essential Variables

a. For weld overlay, the overlap of adjacent beads shall be an essential variable and must be reported in the welding Procedure Qualification Record (PQR). During actual production, the overlap shall be similar to that used on the PQR.
b. The number of layers used in the PQR shall be the same as specified in the WPS for the production weld overlaying.
c. A minimum of two overlay passes are required.
d. Weld qualification test coupons should consist of the actual production material.
e. A change greater than ±10 % in the weaving characteristics (oscillation width, frequency, dwell time), if weaving is employed.
f. Any increase in step distance or the setting for overlap of the previous weld pass in the same weld layer.
g. Any decrease in step distance greater than 10 % or the setting for overlap of the previous weld pass in the same weld layer.
h. Any change in welding or process equipment.

E1-2.2 Welding Procedure Qualification (Sour Service)

Welding procedure qualification for sour service a minimum of three hardness traverses are required. Hardness survey and acceptance criteria shall be in accordance with ANSI/NACE MR 0175 / ISO 15156.

All parties consent to this document being signed electronically -PT&CS/GP/INT/2022/5777

E1-3 Welding Processes

The following processes or combinations thereof are acceptable for application of overlay or clad restoration.

- Gas Metal-Arc Weld GMAW
- Gas Tungsten Arc Welding GTAW
- Submerged Arc Welding SAW
- Shielded Metal Arc Welding SMAW
- Electro-slag (strip overlay) ESW
- The use of other processes requires the prior authorization of the COMPANY. Application of such processes shall not be assumed acceptable by the VENDOR during bid preparation, and if intended for use must be submitted, discussed and accepted in writing prior to award of purchase.

E1-4 Filler Metals

a. Filler metal composition shall match the weld overlay material as specified on the COMPANY'S purchase order, design drawings or data sheets.
b. Acceptable filler metals are shown in Table E1.5 below:

Table E1.5 Acceptable Filer Metals

Cladding Alloy	Layer 1	Layer 2+
304L	ER 308L	ER 308L
316L	ER 309L	ER 316L
INCOLOY® Alloy 825 Alloy 825	ERNiCrFe-1	ERNiCrFe-1
INCONEL® Alloy 625 Alloy 625	ERNiCrMo-3	ERNiCrMo-3
321	ER 347	ER 347
347	ER 347	ER 347
MONEL® 400 Alloy 400	ER NiCu-7	ER NiCu-7
CuNi	ER NiCu-7	ER CuNi

®Registered trademark of Special Metals Corporation group of companies.

c. Other grades of filler metals require approval of COMPANY.
d. Filler metal composition for clad restoration of austenitic stainless clad material shall be within the specified chemistry range of the cladding material except for the following:
e. A higher chrome-nickel filler metal such as Type 309L may be used for the first pass or first layer to compensate for dilution.

All parties consent to this document being signed electronically -PT&CS/GP/INT/2022/5777

f. Type 310 filler metal shall not be used.

g. ERNiCrMo-3 shall have a maximum iron content of 1%.

h. For weld overlay of nickel and nickel-base alloys, the filler material shall be compatible to the clad material. Composition shall be determined by the CONTRACTOR, or by agreement with the VENDOR, subject to COMPANY approval.

E1-5 Surface Preparation

Surfaces to be welded shall be free from surface irregularities and foreign matter such as scale, spatter, grease, etc.

E1-5.1 Cladding Cut-Back for Joining Clad Components

Cladding shall be stripped back from the base metal for a minimum distance of 10mm on each side prior to base metal welding as shown in Figure E1.3 below. The edges of the groove in the cladding shall be rounded off to aid fusion.

Figure E1.3 Cladding Cutback

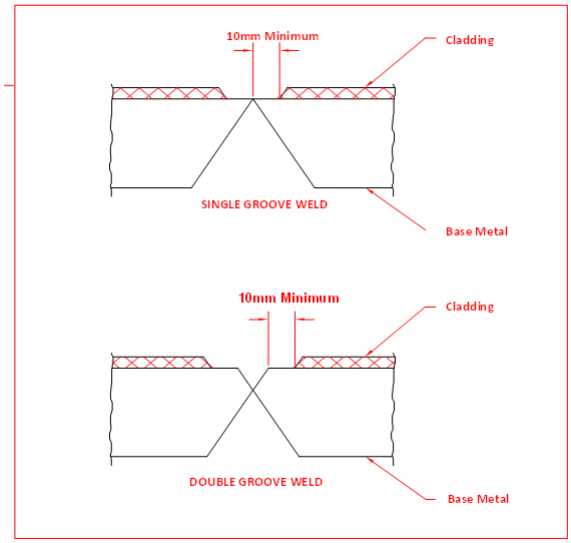

The base metal for clad restored seams shall be completely welded before the clad restoration is applied. The base metal surface at the cladding interface shall be ground flush before cladding restoration. Penetration into base metal shall not exceed 0.8 mm as shown in Figure E1.*4*.

All parties consent to this document being signed electronically -PT&CS/GP/INT/2022/5777

Figure E1.4 Cladding Restoration Penetration

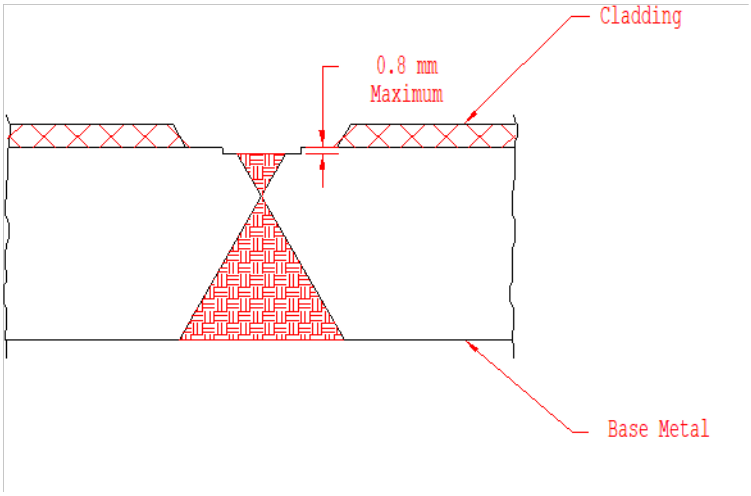

Clad removal shall be verified by testing with a saturated copper sulphate solution in accordance with ASTM A380.

E1-5.2 Cleaning

a. Each weld pass shall be thoroughly cleaned and all slag or other foreign matter removed before the next pass is deposited.
b. All slag, flux, and spatter shall be removed from the completed weld and surrounding areas.
c. Stainless steel and nonferrous materials shall be cleaned with alloy compatible grinding wheels or stainless steel brushes not previously used on other materials.

E1-6 Welding Requirements

a. The minimum deposit thickness shall be specified in the engineering design but shall not be less than 3 mm for corrosion-resistant overlays. Minimum final thickness of weld overlay shall be 3 mm unless otherwise specified in the CONTRACTOR'S design drawings or data sheets. Maximum overlay thickness shall not exceed 9 mm.
b. Multiple-layer overlay welds shall have the same number of layers as those qualified on the welding procedure qualification.
c. All welders and welding operators for weld overlays shall be qualified in accordance with the applicable code.
d. Weld overlay procedures shall be specifically qualified, standard groove weld qualifications are not acceptable.

E1-6.1 Pressure Vessels

a. The maximum interpass temperature for austenitic stainless steel shall be 150°C.
b. The weld overlay shall be deposited such that weld passes are oriented circumferentially around the inside of the vessel. In the case of small diameter nozzles less than 300 mm inside diameter, the weld passes may be deposited in the longitudinal direction.

All parties consent to this document being signed electronically -PT&CS/GP/INT/2022/5777

E1-7 Post Weld Heat Treatment (PWHT)

PWHT shall be performed when required by the fabrication code, this specification or AGES-SP-07-003.

E1-8 Testing

E1-8.1 Chemical Analysis

The production weld overlay deposits shall be verified by check analysis of the principal elements.

a. Chemical analysis shall be taken at 3.0 mm from the weld overlay fusion line.

b. The chemical analysis results shall be as per the UNS grade of the clad material. For some applications an iron content of up to 10% for UNS N06625 may be allowed. This will be specified on the purchase order or datasheets.

c. For austenitic stainless steel weld deposits, the following elements shall be reported: C, Ni, Mn, Cr and Mo (Cb/Nb for Type 347) and Ti (for Type 321) shall also be reported for stabilized stainless steels.

d. Measurement equipment requires COMPANY approval for sampling of production overlay welds.

e. Documentation of test results shall be available for review by COMPANY.

E1-8.1.1 Chemical Analysis - Sour Service

a. For sour service applications the “effective depth" of overlay or back cladding shall be a minimum of 3 mm measured from the final (as welded or machined) surface.

b. The minimum production overlay or back cladding thickness required shall be equal to or greater than the dimension representing the height above the fusion line where the PQR chemical analysis was taken plus 3 mm. The WPS shall specify this minimum production overlay or back cladding thickness.

E1-8.2 Thickness of Weld Overlay

Thickness of overlay shall be measured by taking thickness measurements before and after weld overlay, or after machining as applicable, by using ultrasonic examination. Readings shall be taken at least at four locations.

E1-8.3 Ferrite Content (Austenitic Stainless Steels only)

The ferrite content of production weld overlay deposits shall be tested. The Ferrite Number (FN) shall be between 3 - 10 FN (5 – 10 FN for Type 347) as determined by a magnetic instrument such as a Severn Gauge or Ferrite Scope calibrated in accordance with AWS A4.2 or calculated using the Welding Research Council (WRC) 1992 Ferrite Diagram. When PWHT is required, the FN shall be between 3-8 FN. Ferrite content shall be measured prior to any PWHT. Documentation of test results shall be available for review by the COMPANY.

E1-9 Non-destructive Examination

Non-Destructive examination shall be performed in accordance with the requirements of this supplement.

E1-9.1 Visual Examination

a. Welds shall be examined visually before any other non-destructive examinations are performed.

All parties consent to this document being signed electronically -PT&CS/GP/INT/2022/5777

b. All cracks, lack of fusion, surface slag/scale overlaps, undercuts, arc strikes and surface porosity are unacceptable.

E1-9.2 Liquid Penetrant Examination

a. All weld overlay and clad restored weld surfaces, as well as attachments to those surfaces, shall be 100 percent examined by liquid penetrant examination. Examination shall be performed after PWHT when PWHT is performed.
b. Surfaces examined shall be free of cracks, lack of fusion, porosity and other defects.

E1-9.3 Ultrasonic Examination

Where access allows, weld overlay deposits shall be 100% ultrasonically tested for overlay thickness and bond quality in accordance with the requirements of the applicable fabrication code.

Acceptance Criteria:

a. Overlay thickness as specified.
b. Bond: no lack of fusion.

E1-9.4 Radiographic Examination

As required by the applicable fabrication code.

E1-9.5 Positive Material Identification (PMI)

PMI shall be carried on weld overlay layer for every component i.e. pipe, flange, etc. Any change in heat number of the wire used for weld overlay on the overlay shall require PMI. Acceptance criteria shall be as per the chemistry requirement for the range of elements specified in AGES-GL-13-002.

E1-10 Welding Repairs

a. Unacceptable defects shall be removed by mechanical means and/or dressed down and rewelded, if necessary.
b. Areas excavated for defects shall be examined by liquid penetrant to ensure complete removal prior to welding. The COMPANY shall be notified of any defect extending into the base material, prior to repair.
c. Weld overlay or clad welds requiring welding repairs shall be welded with the original welding procedure or an authorized welding repair procedure. Repair welding procedures without the use of a filler metal are not permitted.
d. Repairing by welding is allowed for one attempt only, re-repair (second repair) is not allowed.
e. Repair welding shall not be performed without the use of filler metal.

All parties consent to this document being signed electronically -PT&CS/GP/INT/2022/5777

E2 APPENDIX E2 – WELDING & NDE REQUIREMENTS FOR CR-MO / CR-MO-V STEEL IN HIGH TEMPERATURE, HIGH PRESSURE HYDROGEN SERVICE

E2-1 Technical Requirements

This appendix defines the welding and NDE requirements for pressure vessels and heat exchangers fabricated from 1¼Cr-½Mo, 2¼Cr-1Mo, 3Cr-1Mo [Conventional steel], 2¼Cr-1Mo-¼V [Advanced Steel] steel with or without ASS weld overlay and/or integral cladding for high temperature, high pressure hydrogen services.

Details contained herein are based on API RP 934-A and API RP 934-C and include supplementary requirements which are relevant for Cr-Mo steels intended for HTHA service. Where conflict exists between this appendix and the relevant code, then the more stringent requirements shall govern unless agreed with COMPANY.

Welding & NDE shall be performing in accordance with the fabrication code, this specification, and the applicable API RP 934-A, C or E.

E2-1.1.1 J-factor, K-factor and X-bar

a. The J-factor is calculated using the equations below:

$$\textbf{J-factor} = (Si+Mn) \times (P+Sn) \times 10^4$$

Where Si, Mn, P and Sn are in wt%

b. The X-bar factor is calculated using the equations below:

$$\textbf{X–Bar} = \frac{(10xP + 5xSb + 4xSn + As)}{100}$$

Where P, Sb, Sn and As are in ppmw.

c. The K-factor is calculated using the equations below:

$$\textbf{K-factor} = Pb + Bi + 0.03xSb$$

Where Pb, Bi and Sb are in ppmw.

E2-2 Welding Consumable Requirements

E2-2.1 Material Requirements

The deposited weld metal shall match both the nominal chemical composition and mechanical properties of the base material.

For 1¼ Cr-½Mo, 2¼Cr-1 Mo, 2¼Cr-1Mo-¼V and 3Cr- 1Mo, the weld material chemical composition, X-bar and K-factor requirements shall be as given in Table E2.6 to minimize susceptibility to temper embrittlement and RHC during fabrication. The chemical composition restriction shall apply to the heat analysis.

Low hydrogen type welding consumables, including fluxes, shall have a maximum of 4 ml of diffusible hydrogen for every 100 g of weld metal, H4 per AWS A4.3.They shall be baked, stored and used in accordance with the consumable manufacturer's instructions/ recommendations.

All parties consent to this document being signed electronically -PT&CS/GP/INT/2022/5777

Table E2.6 Chemical Composition Limits for Cr-Mo Steel Weld Consumables

Material	Max. Element Limits (wt %)					J-factor Max. Limits	X-bar Max. Limits	K-factor Max. Limits (ppm)
	C	P	S	Cu	Ni			
1¼Cr-½Mo	0.15	0.010 Note 1	0.007 Note 2	0.2	0.3		15	
2¼Cr-1Mo	As per AWS specification					100		1.5 Note 3
2¼ Cr-1Mo / 3Cr-1Mo								
2¼Cr-1Mo-¼V								

Notes:

1. Phosphorous content in weld consumables for the welding of piping, pipe flanges and pipe fittings shall be a maximum of 0.012 wt%.
2. Sulphur content in weld consumables for the welding of piping, pipe flanges and pipe fittings shall be a maximum of 0.012 wt%.
3. Special requirement for SAW of 2¼Cr-1Mo-¼V: For each heat-of-wire / batch-of-flux combination, screening test for RHC susceptibility shall be carried out as per Annex-B of API RP 934A. The acceptance criteria for wire-flux combination shall be as follows;
   i. Average Reduction of Area (RoA) of the two specimens shall be 32 % min;
   ii. RoA of individual specimen shall be 29 % min.

E2-3 Mechanical Properties

E2-3.1 Tensile Properties

The tensile properties of the deposited weld shall meet the API RP 934-C, requirements for 1¼Cr-½Mo and API RP 934-A, requirements for 2¼Cr-1Mo, 2¼Cr-1Mo-¼V and 3Cr-1Mo.

E2-3.2 Impact Properties

a. CVN impact testing shall be performed on each lot of electrodes, heat of filler wire, and combination of flux and heat of wire used for welding for all 1¼Cr-½Mo steel welding consumables in accordance with the API RP 934- C requirements.
b. For 2¼Cr-1Mo, 2¼Cr-1Mo-¼V and 3Cr-1Mo steel welding consumables, impact testing shall be in accordance to API RP 934-A.

E2-3.3 Step Cooling Tests

In addition to the X-bar requirements, to determine the susceptibility to temper embrittlement of 2¼Cr-1Mo, 2¼Cr- 1Mo-¼ and 3Cr-1Mo weld metals, each lot of electrode, heat of filler wire and each combination of wire and flux shall be subject to step cooling tests in accordance with API 934-A.

E2-3.4 Material Certification

a. A CMTR which contains all required chemical and mechanical test results including X-bar, K-factor and step cooling testing (if applicable), shall be completed prior to the start of fabrication for all welding consumables.

All parties consent to this document being signed electronically -PT&CS/GP/INT/2022/5777

b. A minimum of EN 10204 3.1 certification is required for all welding consumables, the certification shall include mechanical properties and chemical composition in conformance to the welding consumable classification of ASME BPVC II-C. All such certification shall be original or red stamped verified copies by CONTRACTOR approved inspectors.

E2-4 Welding, Heat Treatment And Production Testing

E2-4.1 General Welding Requirements

a. In addition to the general welding requirements identified in API RP 934-A and API RP 934-C and this specification, all weld repair procedures shall be subject to COMPANY approval.
b. Location and dimensions of all weld repairs shall be documented.
c. The weld build-up for permanent attachments shall be made of the same material as the pressure containing part.
d. All temporary attachments shall be removed and the base metal surface repaired/ dressed and confirmed defect free by MT/PT, before the final post weld heat treatment.

E2-4.2 Welding Procedure Qualification

In additton to this appendix the the Welding Procedure Specification (WPS) shall be qualified in accordance with this specification in accordance with Section B1 general, B2 or B3 as applicable. Impact testing to be performed. Qualifiaction being based on ASME Section IX for conventional steels; and ASME Section IX and ASME Section VIII, Division 2 or ASME Code Case 2151-1 for advanced steels as applicable.

a. Material for procedure qualification tests shall be in accordance with the material specification, steel making, chemical composition, heat treatment and mechanical property requirements of Section 6.1 of AGES-SP-07-005. The welding electrodes, wire and flux shall be the same type and brand as those to be used in production.
b. CVN impact testing shall be performed on the weld metal and HAZ of the heat treated test plate in the minimum and maximum PWHT'd condition for each welding procedure. The CVN impact values shall meet the test temperature and acceptance requirements of Section 6.5.3 AGES-SP-07-005.
c. Step cooling tests shall be performed on the weld metal and HAZ for each welding procedure and process for 2¼Cr-1Mo, 2¼Cr-1Mo-¼V and 3Cr-1Mo as specified for the weld metal in API RP 934-A.
d. All weld metal tensile tests shall be performed at the equipment design temperature for each welding process (where the test specimens are heat treated to simulate maximum PWHT condition) and the minimum acceptance values shall be 90 % of the values listed in ASME BPVC Section II-D, Table U for 2¼Cr-1Mo, 2¼Cr-1Mo-¼V and 3Cr-1Mo. Additionally, an ambient temperature transverse weld tensile test shall be performed on a weld joint of the heat-treated test plate in the maximum PWHT condition which shall meet the ambient temperature properties specified for base metal of the applicable code(s).
e. A Vickers hardness survey of the weld joint specimens shall be conducted on a macro-section. The specimen shall be subjected to the minimum PWHT. The Vickers hardness readings shall not exceed 235 Hv10 for conventional steels and 248 Hv10 for advanced steels. The Vickers hardness survey shall be completed at a depth of 1.6 to 3 mm below the surface of each side and at ½T. The

All parties consent to this document being signed electronically -PT&CS/GP/INT/2022/5777

surveys shall include the base material, HAZ and the weld metal. See Figure E2.5 below for test locations.

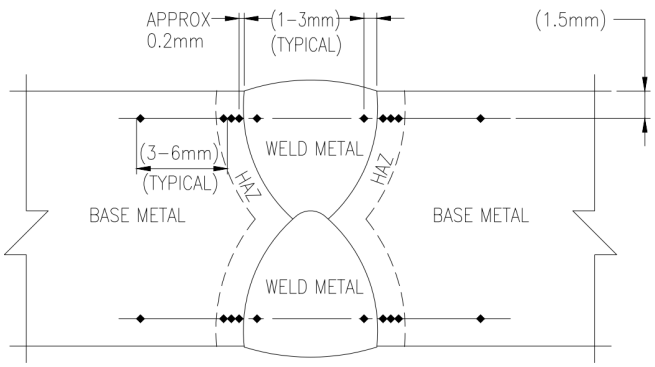

Figure E2.5 Hardness Survey of Weld Joint

E2-4.3 Preheat and Heat Treatments, Cutting and Welding Operations

a. The preheat and Dehydrogenation Heat Treatment (DHT) for 1¼Cr-½Mo shall be in accordance to API RP 934- C requirements.
b. The preheat and heat treatments during welding of 2¼Cr-1Mo, 2¼Cr-1Mo-¼V and 3Cr- 1Mo shall be in accordance of API RP 934-A requirements.

E2-4.3.1 Intermediate Stress Relief (ISR) Requirements

a. ISR shall be performed for advanced steels (2¼Cr-1Mo-¼V).
b. ISR shall also be performed for restrained joints of conventional steels (1¼Cr-½Mo, 2¼Cr-1Mo, 3Cr-1Mo) with a shell or head thickness 150 mm (6 in) or greater. Restrained joints include nozzle welds, head to shell welds and catalyst support rings fabricated with weld build-up.
c. ISR may be exempt for 1¼Cr-½Mo if approved by COMPANY, however DHT shall be performed in 1¼Cr-½Mo as per requirements mentioned in this section.
d. DHT may be used for conventional steel subject to COMPANY approval.
e. ISR soak time and metal temperature for advanced steels and conventional steels shall conform to API RP 934- A and API RP 934-C as applicable.

E2-4.4 Production Testing

E2-4.4.1 Chemical Composition of Production Welds

The chemical composition requirement for weld deposits shall be in conformance to API RP 934- A for 2¼Cr- 1Mo, 2¼Cr-1Mo-¼V and 3Cr-1Mo and to API RP 934-C for 1¼Cr-½Mo.

E2-4.4.2 Hardness of Weld Deposit and Adjacent Base Metal

After final PWHT hardness testing shall be performed on each pressure retaining weld in conformance to API 934-A (2¼Cr-1Mo, 2¼Cr-1Mo-¼V and 3Cr-1Mo), to API RP 934-C (1¼Cr-½Mo) requirements, and COMPANY welding specification.

The hardness values shall not exceed:

i. 225 HBW or equivalent for conventional steels; and,
ii. 235 HBW or equivalent for advanced steels,

All parties consent to this document being signed electronically -PT&CS/GP/INT/2022/5777

Hardness tests shall be performed on each 3 m length of weld, or fraction thereof and one test per nozzle. This testing shall be performed on the side exposed to the process environment when accessible. The test locations shall include weld metal and base metals close to the fusion line on both sides - one result consisting of three hardness measurements at each test location. This requirement does not apply to weld overlays or welds that are covered with weld overlay on the side exposed to the process.

E2-4.4.3 Weld Metal Production Impact Tests

The weld metal production impact test shall be in conformance to API RP 934-A and API 934-C for the respective steel grade material.

E2-4.5 Weld Overlay

E2-4.6 Qualification of Weld Overlay

a. The weld overlay process shall be qualified in accordance with ASME Section IX and Project welding Specification, with the following additional requirements:

b. Welding Procedure Qualification Tests (WPQT) shall be made on plate or forging base material meeting the requirements of this specification with a thickness not less than half thickness of the vessel base metal or 50 mm, whichever is less;

c. The welding electrode, wire and flux used for the procedure qualification shall be of same type and brand to be used in production;

d. The WPQT shall be qualified on a weld joint which has been subject to PWHT for the PWHT time specified for the maximum thickness component of the equipment;

e. The ferrite content and chemical composition of the WPQT weld overlay shall be checked by chemical analysis of samples taken at minimum thickness qualified in accordance with ASME Section IX (T1) and at specified minimum weld overlay thickness (T2) as shown in Figure E2.6. The ferrite content requirement shall be between 3FN and 10FN as calculated per the WRC Bulletin 519 1992 diagram. The chemical composition of the specified stainless steel shall meet the requirements of ASME SFA5.4 / SFA-5.4M;

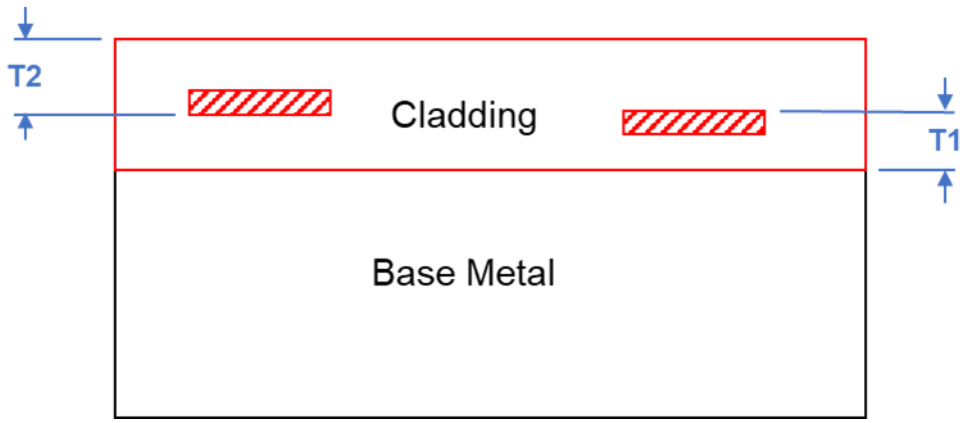

Figure E2.6 Weld Overlay Chemical Analysis

f. Weld overlay shall be tested for resistance to hydrogen induced disbondment as follows:

i. The hydrogen pressure and temperature used in the disbonding test shall be representative for the production vessel;

All parties consent to this document being signed electronically -PT&CS/GP/INT/2022/5777

ii. Proposed testing conditions representing or exceeding the equivalent of actual maximum operating service are indicated in Table 3 of API RP 934- A;

iii. Six domains of test conditions, depending on reactor wall thickness, pressure and temperature are defined in Table 4 of API RP 934-A. The disbonding test shall be carried out as per corresponding domain test condition;

iv. The acceptance criteria shall be meet area ranking A and distribution ranking 1 of ASTM G146;

v. Previous qualified hydrogen disbonding test results can be submitted if representative of the proposed WPS, and process conditions are similar to the contract (relaxation of testing may be considered if the domain falls into D, E, F for 2¼Cr-1Mo, 2¼Cr 1Mo ¼V and 3Cr-1Mo or for all domains for 1¼Cr-½Mo);

vi. The test procedure and results shall be submitted for the Contractor's and the COMPANY'S review and authorization with the WPS and Procedure Qualification Records (PQR)s.

g. Hardness test shall meet the hardness acceptance values mentioned in E2-4.4.2.

E2-4.6.1 Preheat and Interpass Temperature During weld Overlay

The preheat and Interpass temperature during weld overlay shall be in conformance to API 934-A or API RP 934-C. However, for 1¼Cr-½Mo, 2¼Cr-1Mo, 2¼Cr-1Mo-¼V and 3Cr-1Mo, no preheating is required for the second or any subsequent layers if the deposit thickness for the first layer if weld overlay is at least 2 mm.

E2-4.6.2 Production Testing of Weld Overlay

The chemical composition and Ferrite content of weld overlay shall be in checked in accordance to the requirements of API RP 934-A for 2¼Cr-1Mo, 2¼Cr-1Mo-¼V and 3Cr-1Mo and API RP 934-C for 1¼Cr-0.5Mo.

E2-4.6.3 Final Post Weld Heat Treatment (PWHT)

PWHT shall be performed in an enclosed furnace, whenever possible. When vessel size does not allow PWHT in the furnace, PWHT may be performed locally or sectionally in the furnace according to ASME Section VIII, Div. 2. It is not permitted to use ASME Section VIII, Div. 2, Alternative PWHT Requirements for Lower PWHT Temperatures.

The PWHT temperature shall be strictly controlled so the temperature gradient is not harmful. The vessel skin (including the insulated portion of the vessel outside the furnace) and furnace temperature shall be measured and controlled by attached thermocouples and shall meet the requirements of API RP 934-A for 2¼Cr-1Mo, 2¼Cr- 1Mo-¼V and 3Cr-1Mo and API RP 934-C for 1¼Cr-½Mo.

All parties consent to this document being signed electronically -PT&CS/GP/INT/2022/5777

Table E2.7 PWHT Holding Temperature and Time

Material	PWHT Temperature (°C)	Holding Time
1¼Cr-½Mo	675 ± 15	Note 1
2¼Cr-1Mo, 3Cr-1Mo	690 ± 14	Note 2
2¼Cr-1Mo-¼V	705 ± 14	8 hours minimum, Note 3

Notes:

1. In accordance with applicable code i.e. ASME BPVC Section VIII Div. 2, Table 6.10 or ASME BPVC Section VIII Div. 1, Table UCS-56-3.
2. In accordance with applicable code i.e. ASME BPVC Section VIII Div. 2, Table 6.11.
3. The electrode manufacturers have developed their materials for thicker welds, and even with thinner welds, this longer heat treatment is needed to meet toughness and tensile properties. In accordance with applicable codes, i.e. ASME BPVC, Section VIII, Division 2 requirements table 6.11, Table UCS-56-4 must also be met if stricter.

Continuous time-temperature records of all PWHT operation shall be documented to meet the requirements of ASME Section VIII, Div. 2.

For all heat treatments, a fully detailed heat treatment procedure shall be provided. Heat treatment shall not commence until heat treatment procedures have been reviewed and approved by COMPANY. Heat treatment procedures shall include support types, number and locations; thermocouple types, number, method of attachment, locations and calibration method; heating and cooling methods, heating and cooling rates and holding temperature, holding time and furnace atmosphere.

All parties consent to this document being signed electronically -PT&CS/GP/INT/2022/5777

E2-5 Non-Destructive Examinations

E2-5.1 General

a. Non-destructive Examination (NDE) personnel shall be qualified in accordance with ASNT SNT-TC-1A Level 2. Personnel interpreting and reporting results shall also be qualified Level 3 to the same practice.
b. For ASME VIII Div. 2 vessels, NDE personnel shall be qualified per Section VIII, Div. 2. NDE procedures shall be submitted to COMPANY for approval prior to start of fabrication.

E2-5.2 Non-destructive Examination Prior to Fabrication

E2-5.2.1 Magnetic Particle Testing or Dye Penetrant Testing

a. The entire surface of all prepared welding edges shall be 100% Magnetic Particle Testing (MT), or by Dye Penetrant Testing (PT). Examination shall be after finish machining but before welding.
b. Acceptance standard, as per fabrication code, no defects / indications.

E2-5.3 NDE During Fabrication

a. To prevent cooling down during fabrication, dry powder MT should be used.
b. MT shall be performed after completion of all welds excluding stainless steel overlay.
c. This shall include all pressure retaining base metal welds, weld build-up deposits, root passes and attachment welds. MT shall also be performed after any gouging or grinding operation including back gouging of root passes. MT shall be in accordance with ASME Section VIII, Division 2.
d. Temporary attachments shall be minimized. Areas where temporary attachments have been removed shall be examined by MT or PT in accordance with ASME Section VIII, Division 2 as applicable.

E2-5.4 NDE After Fabrication And Prior To Final PWHT

E2-5.4.1 Base Metal Welds Susceptible to RHC

a. Previous experience has shown that 2¼Cr-1Mo-V steel vessels fabricated using SAW process have the tendency to suffer from RHC. The initial indicator prior to RHC involved many short, transverse cracks in the weld deposits, and API RP 934-A Annex A provides detailed guidance on inspection methods for the detection of transverse RHC.
b. Where applicable, pre-screening of the weld deposit shall be used and performed in accordance with API RP 934-A. Non-pre-screened welds made with heats of flux / wire with unknown performance as far as RHC susceptibility (i.e. they have not been tested per Annex B of API 934-A) shall only be allowed with prior agreement from the COMPANY.
c. For SAW welds that are categorised as "pre-screened" for minimizing transverse RHC, as defined in Annex A of API RP 934-A, UT may be performed after ISR, in lieu of UT after PWHT, if approved by COMPANY. The NDE requirements for pre-screened and non-pre-screened SAW welds are summarized below.

    i. Non-Pre-Screened SAW welds – TOFD method UT in conformance to Annex A of API 934-A shall be performed both after ISR and after final PWHT;

    ii. Pre-Screened SAW welds – TOFD method UT in conformance to Annex A of API 934-A may be performed after ISR, in which case TOFD method UT after final PWHT may be exempted by COMPANY approval, if UT after ISR resulted no short transverse cracks.

All parties consent to this document being signed electronically -PT&CS/GP/INT/2022/5777

d. When performing the supplementary UT testing for detection of transverse RHC, the following conditions shall apply:

e. All pressure retaining base metal welds (including nozzles) and vessel to support skirt welds shall be fully examined for transverse RHC by UT Time-of-Flight Diffraction (ToFD) in accordance with guidance in API RP 934-A Annex A and shall be undertaken in accordance with a COMPANY approved NDE procedure;

f. To request a waiver of the inspection for RHC prior to final PWHT in lieu of after PWHT for pre-screened SAW welds, the welding consumables MANUFACTURER / SUPPLIER shall provide certification that all wire / flux combinations used in the manufacture of the vessel have negligible susceptibility to RHC. See API RP-934-A Annex B for guidance regarding pre-screening welds for susceptibility to RHC;

g. NDE shall be performed at least 24 hours after the welds have been intermediate PWHT'd and cooled down to ambient temperature;

h. The ToFD examination shall be in accordance with ASME VIII, Division 2,

i. Acceptance criteria for the ToFD examination shall be in accordance with ASME Section VIII, Division 2.

j. The ToFD operators performing the examination, data analysis, interpretation and evaluation shall be qualified and certified in accordance with ASNT SNT-TC-1A and ASNT CP-189, Levels I and II;

k. The employer's written practice for qualification and certification of ToFD personnel shall be subject to the approval of the CONTRACTOR and COMPANY;

l. ToFD procedures shall be approved by an ASNT SNT-TC-1A Level III individual;

m. ToFD procedures shall be subject to the approval of the CONTRACTOR and COMPANY; The examination shall be performed from the outer surface of the vessel;

n. The near outer surface of the welds and HAZ shall be examined using creep-wave probes that have been calibrated on a 3 mm (1/8 in) diameter Side-drilled Hole (SDH) calibration block, located at a depth of 3 mm (1/8 in) below the outer surface;

o. The probe-to-SDH distance shall be 10 mm (3/8 in);

p. Acceptance criteria of the creep-wave inspection shall be in accordance with ASME VIII Div. 1, Appendix 12;

q. The creep-wave procedure shall be approved by a UT Level III individual; and,

r. The creep-wave procedure shall be subject to the approval of the CONTRACTOR and COMPANY.

E2-5.4.2 Base Metal Welds - General Requirements

The additional inspection associated with detecting transverse RHC occurring in SAW welds deposits shall be completed in addition to the inspection requiring all pressure retaining groove / butt welds and vessel-to-support skirt welds which shall be fully examined by Radiography Testing (RT) (or UT-subject to COMPANY approval) before final PWHT.

a. RT shall be in accordance with ASME Section VIII, Division 2, Paragraph 7.5.3.

b. UT used in lieu of RT shall meet the requirements of ASME Section VIII, Division 2, Paragraph 7.5.5 and APPENDIX A2 of this Specification.

c. When UT is applied in lieu of RT, at least one of the UT probes shall irradiate the weld bevel perpendicularly (within 5 degrees).

All parties consent to this document being signed electronically -PT&CS/GP/INT/2022/5777

E2-5.4.3 Weld Overlay

Spot UT shall be done in conformance to API 934-A or API RP 934-C requirements.

E2-5.5 NDE After Final PWHT

E2-5.5.1 Base Metal Welds

a. All pressure retaining base metal welds and vessel to support skirt welds shall be fully examined for transverse RHC by UT ToFD in conformance to API RP 934-A Annex A and this appendix (unless done after ISR and waiver has been approved by COMPANY. Additionally, all pressure retaining nozzle welds shall be fully examined for transverse RHC by pulse-echo UT.

b. In addition to the RHC inspection, all pressure retaining groove / butt welds including nozzles and vessel-to- support skirt welds shall be fully examined by UT after final PWHT in accordance with ASME Section VIII, Division 2, Paragraph 7.5.4

c. All accessible welds shall be examined by MT. An Alternating Current (AC) yoke method shall be used to prevent arc strikes. PT may be substituted for MT whenever MT is impractical.

d. Internal weld surfaces (grooves and fillets) on unclad or non-overlayed pressure retaining parts in services shall receive 100 % MT inspection, where accessible.

e. NDE shall be performed at least 24 hours after the welds have been post weld heat treated and cooled down to ambient temperature.

E2-5.5.2 Weld Overlay

a. Entire surfaces of austenitic stainless steel weld overlay (full surface coverage), and attachment welds to the overlay, shall be examined by PT in accordance with ASME Section VIII, Division 2, Paragraph 7.5.7.

b. Spot UT should be performed as described in E2-5.4.3.

c. For non-pre-screened steel, the API RP 934-A Annex A requirement apply for both prior and after PWHT irrespective of ISR.

E2-5.5.3 Positive Material Identification

All materials specified in Table E2.6 shall be subject to 100% PMI. The PMI procedure shall be submitted to COMPANY for approval in accordance with AGES-GL-13-002.

All parties consent to this document being signed electronically -PT&CS/GP/INT/2022/5777

E3 APPENDIX E3 – WELDING & NDE REQUIREMENTS FOR SEVERE SERVICE

E3-0 General

This appendix describes the welding and associated NDE controls required for severe service as described in AGES-SP-07-003 and fall into the following categories:

a. Sour service / Wet H2S service;

b. Alkaline carbonate services;

c. Amine services with any concentration;

d. Caustic services with any concentration;

e. Ammonium bisulphide (NH4HS) with concentration > 2 wt%.

E3-1 General Requirements For Sour Service / Wet H2S Service

E3-1.1 Carbon Steel

E3-1.2 General Requirements

The following general requirements shall be applicable for the application of weldments in sour service / wet H2S service:

a. "Carbon Steel" (CS) shall be interpreted as including micro-alloyed steels and low alloy steels for the purpose of this Supplement;

The following formula shall be used to calculate the Carbon Equivalent (CE) (all values are wt%):

$$CE = \%C + \%\frac{Mn}{6} + \frac{\%Ni + \%Cu}{15} + \frac{\%Cr + \%Mo + \%V}{5}$$

E3-1.3 Clad Vessels and Equipment

Provided the CRA layer covers 100 % of the process-wetted surfaces so that no CS is exposed to the environment, the requirements for CS used as the substrate for a metallurgically clad corrosion-resistant alloy are as follows:

a. The substrate material shall comply with the hardness limitations in accordance with this Supplement;

b. Weld Procedure Qualification Record (PQR), weld hardness limitations and testing shall be in accordance with this specification. PWHT is required only:

   iii. If required to meet the hardness requirements;

   iv. To comply with Design Code requirements.

Equipment that has been PWHT according to Code after the CS fabrication does not require a further PWHT after weld-overlay with 100 % coverage, dependant upon substrate material and subject to COMPANY approval.

Where the CRA layer has partial coverage, and any part of the CS substrate material is exposed to the sour environment, then substrate material shall comply with all requirements of this appendix as if it was in direct exposure to the sour environment. PWHT is mandatory for welded vessels in this case.

All parties consent to this document being signed electronically -PT&CS/GP/INT/2022/5777

E3-1.4 Fabrication and Welding of Carbon and Low Alloy Steel

E3-1.4.1 General

This section applies to the fabrication of vessels and of piping systems both in the shop and on the plant. The requirements also apply to welding of internal and external attachments to the pressure boundary components. This section is NOT applicable to seam welding and manufacture of welded pipe.

The inside weld surfaces of pressure equipment such as vessels, exchangers, and compressor casings fabricated from plates shall have the weld reinforcement ground smooth and as nearly flush as possible to reduce stress risers, remove built-in notches, undercuts, etc. to facilitate NDE examination.

Stress raisers, such as welds overly reinforced with high crowns or with the tops of crowns ground flat and having sharp edges or welds with rough bead profiles, shall be corrected. The remains of any internal temporary attachments, line-up clamps, backing bars, or arc strikes shall be ground flush with the base metal and inspected with MT / WFMT before preparation for shipment.

E3-1.4.2 Welding of Vessels and Piping Systems

This section applies to welding of CS pressure vessels, equipment, and process piping systems. Welding consumables shall comply with International Standards, i.e. AWS / ASME SEC IIC / EN / ISO. Unless specified otherwise in other project supplements, a minimum of EN 10204 3.1 certifications is required for all welding consumables. The use of austenitic welding consumables to avoid PWHT is prohibited. Socket welding shall not be permitted in sour service. The requirements of COMPANY welding supplements and project appendix will be applicable in addition to the requirement of this Section.

E3-1.4.3 Acceptable Welding Processes

Pressure retaining welds and attachments to the pressure boundary components shall be made with the following welding processes only:

a. <u>Shielded Metal Arc Welding (SMAW)</u>
   No additional Requirements
b. <u>Submerged Arc Welding (SAW)</u>
   Classification EH14 shall not be used. The name-brand flux and the name-brand wire combination used for the welding procedure qualification shall be used for production welding. Active fluxes and alloy adding fluxes, including fluxes that add manganese shall not be used. Only basic fluxes shall be used.
c. <u>Flux Cored Arc Welding (FCAW)</u>

   Refer to Table B1.1 for acceptable applications.

   All welds shall be made with a shielding gas (gas-shielded FCAW) and the self-shielded FCAW process shall not be used;

   Electrodes larger than 1.2 mm diameter shall not be used;

   Classifications EXXT-G and EXXT-GS shall not be used;

   The following additional requirement shall be applicable:

   i. FCAW shall only be used in the spray transfer mode;

   ii. Shall not be used for butt or nozzle welds on the pressure boundary (may be used for internal or external attachment welds onto the pressure boundary).

All parties consent to this document being signed electronically -PT&CS/GP/INT/2022/5777

d. Gas Tungsten Arc Welding

Classification ER70S-6 shall not be used for the GTAW process. ER70S-2 or ER70S-3 may be used.

E3-1.4.4 Welding Procedure Qualification Record (WPQR) General Requirements

a. Where repair welds may be performed in fabrication, both weld and weld repair procedures shall be qualified separately.

b. Where applicable, SSC testing may be specified by COMPANY.

E3-1.4.4.1 Parent Materials

PQR and WPQR tests shall use a pipe with CEV not more than 0.01 point below the maximum allowed in the linepipe order specification, or pipe with the maximum CEV delivered for the project.

E3-1.4.4.2 Macro Examinations and Hardness Survey

a. Two macro sections shall be taken from the completed joint. The specimens shall be polished, etched, and examined under a magnification of 5X to ensure freedom from defects in accordance with ASME Section IX or equivalent International Standard.

b. Following satisfactory macro examination, a Vickers hardness survey using a 10 Kg load (HV10) shall be made on the macro specimens. The general procedure shall be in accordance with ASTM E384 and NACE SP0472 for downstream and NACE MR0175 / ISO15156-2 for upstream applications.

c. Survey layouts for weld repair qualifications and other weld geometries shall be carried out in accordance with NACE MR0103 / ISO 17945 and NACE MR0175 / ISO 15156-2 as applicable.

d. Maximum Hardness; refer to AGES-SP-07-003 for maximum allowable hardnesses

e. Where SAW pipe is used, a separate hardness check shall include measurements at the intersection of the seam weld and girth weld.

f. Alternative hardness limits are acceptable on a case by case basis, provided these are qualified by SSC testing of weld procedures and are approved by COMPANY. SSC tests shall be performed as part of PQR testing using cross- weld four-point specimens, Ref AGES-SP-07-003, APPENDIX A2. Acceptable SSC test results are required. Where there is a difference in essential variables and the Code requires separate PQR and WRPQ to be performed for the welds to pipe bends or other pipeline components, then separate SSC tests are also required. The same maximum hardness limits and SSC testing requirements apply as for the qualification of pipe to pipe welds.

E3-1.4.4.3 Micro Examination

The microstructure of the base metal, HAZ, and weld deposit shall be examined at 100x magnification. An untempered martensitic structure shall not be acceptable.

E3-1.4.4.4 Preheat and Interpass Temperature

a. The preheat used for PQR shall not be greater than that used for production welding.

b. The base metal and inter pass temperature of all welds shall be maintained at not less than the minimum specified preheat temperature until the weld is completed. If the welding process is terminated before completion of the weld, partially completed welds shall be examined with MT and the preheat shall be re-established before restarting welding.

All parties consent to this document being signed electronically -PT&CS/GP/INT/2022/5777

c. Preheat and inter pass temperature shall be sufficient to achieve the specified hardness levels in the weldments.

E3-1.4.4.5 Heat Input

The heat input for production welds based on hardness-tested PQRs shall be monitored and controlled at a level not significantly less than that used for the PQR.

E3-1.4.4.6 Post Weld Heat Treatment

Where required, wherever possible, PWHT shall be performed in a furnace. Heating methods other than furnace shall require approval by the COMPANY. Unless required by code, PWHT is not required for CS equipment which is fully clad with CRA or the clad portion of CS equipment which is partially clad CRA. Based on severe service, PWHT shall comply with the requirement of this appendix in addition with any code requirements. PWHT requirement specific to upstream and downstream segments are covered in the applicable sections of this supplement.

E3-1.4.5 Attachments

a. These requirements apply to welding of all temporary or permanent internal or external attachments made to the pressure containing components.

b. All attachment welds shall be two passes minimum.

c. All internal / external attachments shall be welded to the main component using full penetration welds unless approved otherwise by COMPANY.

d. Fillet welding can only be used where fillet welding is the only option e.g. saddles / doubler pads.

e. Pre-heat shall be calculated based on the base metal thickness and chemistry, according to the ruling Specification or Code. Also, the base metal shall be preheated sufficiently to ensure that the required preheat temperature has been achieved through the full material thickness. The preheat temperature shall be measured on the side of the member to which the attachment weld is to be made. The internal weld surfaces shall be made as smooth and as nearly flush as possible to reduce stress risers, remove built-in notches, and to facilitate MT/ WFMT.

E3-1.4.5.1 Production Weld Testing

a. Production weld hardness testing is required for all weld types in sour service / wet H2S service, no exemptions are permitted

b. Production welds hardness testing shall be performed using portable comparison testers in accordance with ASTM A833 or equivalent. Hardness measuring devices for production weld hardness testing shall comply with NACE MR0103 / ISO 17945, Annex B.

c. Where practical, hardness checks shall be made on the process-side. Otherwise, checks shall be made on the opposite side.

d. Hardness checks shall be made on every weld repair.

e. Hardness checks shall include attachment welds and fillet welds where practical.

f. A test shall consist of three readings, and the mean value shall be the test result.

g. A reduced frequency of hardness checks is permitted for shop fabrications where PWHT is achieved by furnace treatment, see Table E3.8.

All parties consent to this document being signed electronically -PT&CS/GP/INT/2022/5777

Table E3.8 Production Weld Hardness Testing Frequency Requirements

Components	Weld type	Furnace PWHT	Field / Local PWHT
Pressure vessels, other pressure equipment, and tanks	Main seam welds	Test each weld seam, minimum of 1 test per seam, and 1 additional test every 3 m length	Test each weld seam, minimum of 1 test per seam, and 1 additional test every 3 m length
	Nozzle or man-way weld	1 Test per nozzle	Each weld
	Attachment welds	1 Test per separate weld procedure	Each weld
Exchanger tubes	-	5 % of welds, minimum 1 per furnace batch	Each weld (Note 1)
Piping, flanges, pipe fittings	-	5 % of welds, minimum 1 per furnace batch	Each weld
Valve bodies & bonnets, pump casings		5 % of welds, minimum 1 per furnace batch	Each weld
All components	Weld repairs	Each weld	Each weld

Notes

1. Each weld is not applicable for tubesheet to tube field weld joints.
2. The Party responsible for hardness testing (e.g. SUPPLIER or SUB-CONTRACTOR) shall advise the schedule of testing to CONTRACTOR or COMPANY in reasonable time and allow CONTRACTOR or COMPANY representative to witness the testing.
3. The results of tests shall be included in the Databooks for equipment or process unit.

E3-1.4.5.2 Non-destructive Examination

a. The coverage of NDE shall be as described in Table E3.9, unless stated otherwise, these apply to all pressure containment welds. This includes butt, nozzle, and attachment welds, including both sides of the attachment for internal fillet welds.
b. Brushing, or grinding shall be performed to provide a suitable surface for MT / WFMT. Removal of slag, spatter, arc strikes, and heat treatment oxides shall be completed prior to performing NDE.
c. TOFD examination shall be in accordance with ASME V and ASME BPVC code case 2235. For welds whose configuration precludes radiography such as fillet welds or internal parts, UT examination shall be done instead of radiography and the examination report shall be included on the dossier. The acceptance criteria and aspects of NDE for piping and vessels shall be in accordance with this specification and project Specification as applicable.

Table E3.9 NDE Coverage for Pressure Containment CS Welds

All parties consent to this document being signed electronically -PT&CS/GP/INT/2022/5777

Item	Wall Thickness (mm)	NDE Method		
		Visual	WFMT	RT / UT
Pressure Vessels and Equipment	≤ 50	100 %	100 % (Note 1)	100 % (Note 1, 2)
	> 50			100 % (Note 1, 2, 3, 4)
Piping and Piping Systems	All thicknesses			100 % (Note 1, 2)

Notes:

1. Examined after final PWHT.
2. UT shall be used when RT is impractical.
3. Time of Flight Diffraction (TOFD) UT method shall be used.
4. To be performed both before and after final PWHT.

E3-1.4.6 Stainless Steels & Other CRA

E3-1.4.6.1 General

The manufacture, welding and the properties of Stainless Steel (SS) and Corrosion Resistant Alloys (CRAs) shall comply with the requirements of NACE MR0175 / ISO 15156-3 or NACE MR0103 / ISO 17945 (including all heat treatments and hardness limits) as applicable, with any modifications and additional requirements in this Specification / Supplement. Specific requirements for upstream and downstream services are given in the applicable sections of this supplement.

E3-1.4.6.2 Metallic Claddings

Corrosion resistant overlays shall be in compliance with NACE MR0175 / ISO 15156-3 requirements.

E3-1.4.6.3 Fabrication and Welding of Stainless Steels and Corrosion Resistant Alloys

E3-1.4.6.3.1 General

This section applies to the welding & NDE of vessels and of piping systems both in the shop and on plant. The requirements also apply to welding of internal and external attachments to the pressure boundary components.

The requirements regarding welding procedures, welding qualification, testing and weld properties shall be applicable in accordance with NACE MR0175 / ISO 15156-3 or NACE MR0103 / ISO 17945 as applicable, in addition to the requirements of this specification that applies for the equipment or piping.

E3-1.4.6.4 Welding Procedure Qualification

E3-1.4.6.4.1 General Requirements

a. The preheat used for PQR shall not be greater than that used for production welding.

b. Where repair welds may be performed in fabrication, both weld and weld repair procedures shall be qualified separately.

c. Adequate shielding of the weld zone and back side using inert gas shall be achieved to prevent surface oxidation.

All parties consent to this document being signed electronically -PT&CS/GP/INT/2022/5777

E3-1.4.6.4.2 Visual Examinations

Welds shall be visually examined to check for the presence of oxidation on all surfaces. Excessive discolouration and any blackening shall be removed by pickling and passivating treatments.

E3-1.4.6.4.3 Macro Examinations and Hardness Survey

Two macro sections shall be taken from the completed joint. The specimens shall be polished, etched, and examined under a magnification of 5X to ensure freedom from defects in accordance with ASME Section IX or equivalent International Standard. Following satisfactory macro examination, a Vickers hardness survey using a 10 Kg load (HV10) shall be made on the macro specimens. The general procedure shall be in accordance with ASTM E384 and NACE SP0472.

Survey layouts for weld repair qualifications and other weld geometries shall follow the same principles according to NACE MR0103 / ISO 17945 and NACE MR0175 / ISO 15156-2 as applicable.

- Maximum Hardness – for acceptance criteria refer to AGES-SP-07-003.

E3-1.4.6.4.4 Micro Examination

The microstructure of the base metal, HAZ, and weld deposit shall be examined at x 100 magnification. The ferrite content of austenitic and super–austenitic SS welds shall be 3-10 (ferrite number). For SDSS and DSS, the parent and weld metal ferrite / austenite balance shall be measured metallographically. The ferrite content in weld metal shall be 35-65 %. There shall be no evidence of sigma phase or other intermetallics in any part of the base metal, heat affected zone or weld deposit.

E3-1.4.6.5 Post Weld Heat Treatment

ASS, SDSS / DSS and nickel-based alloys shall not be subject to PWHT without COMPANY approval.

E3-1.4.6.6 Attachments

These requirements apply to welding of all temporary or permanent internal or external attachments made to the pressure containing components. All attachment welds shall be two passes minimum. All internal / external attachments shall be welded to the main component using full penetration welds unless approved otherwise by COMPANY. Fillet welding can only be used where fillet welding is the only option e.g. saddles / doubler pads. Pre-heat shall be calculated based on the base metal thickness and chemistry, according to the ruling Specification or Code. Also, the base metal shall be preheated sufficiently to ensure that the required preheat temperature has been achieved through the full material thickness. The preheat temperature shall be measured on the side of the member to which the attachment weld is to be made.

Adequate back-purging shall be achieved in order to prevent oxidation of the surface of the metal in contact with the process environment. The internal weld surfaces shall be made as smooth and as nearly flush as possible to reduce stress risers, remove built-in notches, and to facilitate NDE.

All parties consent to this document being signed electronically -PT&CS/GP/INT/2022/5777

E3-1.4.6.7 Production Weld Testing PMI

100 % PMI of welds is required for all production welds in SS and nickel-based alloys. Ferrite Testing

Ferrite Testing (by ferrite-scope or equivalent instrument or ASTM E562) is required for all austenitic, super- austenitic, duplex or super duplex SS welds. Measurement calibration shall be applicable according to AWS A4.2M / A4.2. One test shall be made per weld. If that test is out of range or invalid, three tests shall be made, and the mean value shall be the definitive value. The ferrite content of austenitic and super–austenitic SS welds shall be 3-10 (ferrite number). The ferrite content of duplex or super duplex weld metal shall be 35%- 65 %.

E3-1.4.6.8 Hardness Testing

Hardness testing shall be carried out in accordance with AGES-SP-07-003.

E3-1.4.6.9 Non-destructive Examination

The coverage of NDE shall be as described in Table E3.10 below. Unless stated otherwise, these apply to all pressure containment SS and CRA welds, including CS + SS / CRA clad items. This includes butt, nozzle, and attachment welds, including both sides of the attachment for internal fillet welds. Removal of slag, spatter, arc strikes, and heat treatment oxides are required.

Table E3.10 NDE Coverage for Pressure Containment SS / CRA Welds

Item	Wall Thickness (mm)	NDE Method		
		Visual	Dye-penetrant Testing (PT)	RT / UT
Pressure Vessels and Equipment	≤ 50	100 %	100 % Note 1	100 % (Note 1, 2)
	> 50			100 % (Note 1, 2, 3,4)
Piping and Piping Systems	All thicknesses			100 % (Note 1, 2)

Notes:

1. Examined after final PWHT.
2. UT shall be used when RT is impractical.
3. Time of flight diffraction (TOFD) UT method shall be used.
4. To be performed both before and after final PWHT.

TOFD examination shall be in accordance with ASME V and ASME BPVC code case 2235. For welds whose configuration precludes radiography such as fillet welds or internal parts, UT examination shall be done instead of radiography and the examination report shall be included on the dossier. The acceptance criteria and aspects of NDE for piping and vessels shall be in accordance with this specification and project specification as applicable.

All parties consent to this document being signed electronically -PT&CS/GP/INT/2022/5777

E3-1.5 Requirements For Sour Service / Wet H2S Service In Upstream Oil And Gas Processing

E3-1.5.1 General

For upstream oil and gas production facilities, all materials in sour service / wet H2S service (pH2S>0.05 psi) shall comply with the requirements of NACE MR0175 / ISO15156-2 as modified and supplemented by the applicable sections of this Specification.

E3-1.5.2 Fabrication and Welding

a. Set-on nozzles shall not be permitted in sour service / wet H2S service unless approved otherwise by COMPANY.

b. For upstream oil and gas applications, the nickel content of the weld metal in contact with sour environments shall not normally exceed 1.0 % unless subject to successful SSC testing and approved by COMPANY.

c. SSC testing to be included for PQR for welding of pressure vessel equipment and piping.

E3-1.5.2.1 Pressure Vessels and Equipment

PWHT is mandatory for all thickness. Process Piping and Pipe Fittings

In a sour service / wet H2S service environment, PWHT is mandatory for the following cases:

a. Double sided welding;

b. Internal weld repair;

c. Internal weld build-up for dissimilar thickness joints to overcome misalignment.

PWHT and its application shall be in accordance with the the applicable fabrication code for any service not listed above. Other process conditions may also require PWHT, as determined during the project design.

E3-1.5.2.2 Atmospheric storage tanks

PWHT of the walls, base, or roof is not required for sour service / wet H2S service provided an acceptable hardness is achieved in PQR tests.

All parties consent to this document being signed electronically -PT&CS/GP/INT/2022/5777

E3-1.6 Requirements For Severe Service In Downstream Refinery

The category and severity as applicable shall be determined in accordance with AGES-SP-07-003.

E3-1.6.1 Requirements For Carbon Steel

E3-1.6.1.1 General Requirements

All CS process equipment and piping operating in downstream applications that are exposed to a sour service / wet H2S service environment, shall be designed and fabricated in accordance with the requirements of NACE MR0103 / ISO 17945 as modified and supplemented by the applicable sections of this Supplement.

E3-1.6.1.2 Fabrication and Welding of Carbon and Low Alloy Steels

a. Stiffening rings and tray support rings shall be attached with full penetration welds.

b. Set-on nozzles shall not be permitted in “MODERATE” or “HIGH” severity SSC or HIC / SOHIC services unless approved otherwise by COMPANY.

E3-1.6.1.3 Welding Consumables

Requirement of 1% Ni restriction is not applicable for downstream refinery applications.

E3-1.6.2 Production Weld Testing

A reduced frequency of hardness checks is permitted for shop fabrications similar to Table E3.8 for "LOW" and "MODERATE" severe services subject to COMPANY approval. The Party responsible for hardness testing (e.g. SUPPLIER or SUB-CONTRACTOR) shall advise the schedule of testing to CONTRACTOR or COMPANY in reasonable time and allow CONTRACTOR or COMPANY representative to witness the testing. The results of tests shall be included in the Databooks for equipment or process unit.

E3-1.6.3 PWHT

E3-1.6.3.1 Pressure Vessels and Equipment

Equipment in all severity service process environments (Table 8.1 and Table 8.2 of AGES-SP-07-003) shall be PWHT’d. The PWHT temperature shall be 620 °C minimum and hold time shall be in accordance with ASME VIII Boiler and Pressure Vessel Code, except where regardless of the thickness of the base metal, a one-hour minimum hold time shall be specified to ensure complete heat treatment. The heating band requirement (i.e. not placed completely in the furnace) shall be as per NACE SP0472.

E3-1.6.3.2 Process Piping and Pipe Fittings

In a sour service / wet H2S service environment, PWHT is mandatory for the following cases:

- Double sided welding;
- Internal weld repair;
- Internal weld build-up for dissimilar thickness joints to overcome misalignment.

a. The applicable industry specs must be followed for PWHT requirement for any service not listed above.

All parties consent to this document being signed electronically -PT&CS/GP/INT/2022/5777

b. Other process conditions may also require PWHT, as determined during the project design.

c. Code exemptions for PWHT are not permitted if PWHT is specified for process conditions.

d. All piping weldments in “HIGH” severity service (Table 8.1 and Table 8.2 of AGES-SP-07-003) or with design pressure above 64 kg / cm2 shall be post-weld heat treated. The PWHT procedure shall consist of heating weldments to 620 °C for a hold time of one hour for each 25 mm, or fraction thereof, of metal thickness with a minimum hold time of one hour. The heating band requirement piping shall be as per NACE SP0472 (Appendix D requirements are mandatory).

e. All piping components in “LOW” and “MODERATE” severity service (Table 8.1 and Table 8.2 of AGES-SP-07-003) shall be PWHT’d with the following exceptions:

- Weld thickness is more than 5mm and ⩽ 19 mm;
- Weld is not double sided;
- Hardness values are in conformance to the requirement of NACE MR0103 / NACE SP0472;
- Weldment is multi-pass welds;
- PWHT is not specified by design code;

PWHT is mandatory:

- If not meeting any of the above requirements from a to e; However since PWHT is an essential welding variable, a qualified weld procedure based on PWHT shall be required to approved by COMPANY;
- Where production hardness values are not met; or where,
- PWHT is specified by Licensor.

E3-1.6.3.3 Atmospheric storage tanks

PWHT of the walls, base, or roof is not required for sour service / wet H2S service provided an acceptable hardness is achieved in PQR tests.

E3-2 Alkaline Carbonate Service

Refer to AGES-SP-07-003 for extended details on classification, and related controls for this service condition.

All equipment and piping in “MODERATE” and “HIGH” severity categories of ACSCC service shall be post-weld heat treated. The PWHT procedure shall consist of heating weldments to 649 °C to 663 °C for a hold time of one hour for each 25 mm, or fraction thereof, of metal thickness with a minimum hold time of one hour. Heat treatment requirements apply to construction and repair welds as well as internal and external attachment welds. The heating band requirement (i.e. not placed completely in the furnace) for equipment and piping shall be as per NACE SP0472 (Appendix D requirements are mandatory). All equipment and piping in “LOW” severity category of ACSCC service may be post-weld heat treated, for higher tensile strength material or if specified by code or COMPANY.

All parties consent to this document being signed electronically -PT&CS/GP/INT/2022/5777

E3-3 Amine Service

Refer to AGES-SP-07-003 for extended details on classification, and related controls for this service condition.

All equipment and piping in amine service shall be post-weld heat treated regardless of diameter or wall thickness and in accordance with API RP 945 and NACE SP0472. The PWHT procedure shall consist of heating weldments to 635±15 °C for a hold time of one hour for each 25 mm, or fraction thereof, of metal thickness with a minimum hold time of one hour. This applies also to repair welds and to internal and external attachment welds. The heating band requirement (i.e. not placed completely in the furnace) for equipment and piping shall be as per NACE SP0472 (Appendix D requirements are mandatory).

E3-4 Caustic Service

Refer to AGES-SP-07-003 for extended details on classification, and related controls for this service condition.

All equipment and piping in caustic service shall be PWHT'd in accordance with API 571 / NACE SP0403. The PWHT procedure shall consist of heating weldments to 635±15 °C for CS and low alloy for a hold time of one hour for each 25 mm, or fraction thereof, of metal thickness with a minimum hold time of one hour. The same requirement applies to repair welds and to internal and external attachment welds. The heating band requirement for piping shall be as per NACE SP0403.

E3-5 Ammonium bisulphide (NH4HS) with concentration > 2 wt%

Refer to AGES-SP-07-003 for extended details on classification, and related controls for this service condition.

E3-5.1 General

There are currently no additional controls identified in AGES-SP-07-003.

E3-6 Testing

E4-5.3.1 Mechanical Testing of Weld Metal

E3-6.1.1.1 Production Impact Test Plates

a. PQR and production Charpy V-Notch impact tests shall be performed when required by the product specification.

b. Impact testing details for welds, both during procedure qualification and during production shall be per the ASME Code. Impact test shall be carried out at temperature 10 °C colder than Minimum Design Metal Temperature (MDMT).

E3-6.1.1.2 Production Hardness Testing

a. Hardness tests shall be performed where specified within this specification.

b. Procedures and test methods used for hardness testing shall be in accordance with ASTM E384. Hardness measuring devices for production weld hardness testing shall comply with NACE MR0103 / ISO 17945, Annex B.

c. Procedures and test methods used for portable hardness testing shall be in accordance with ASTM A833, ASTM A1038, ASTM E110 or equivalent subject to Company prior approval.

All parties consent to this document being signed electronically -PT&CS/GP/INT/2022/5777

d. The following requirements for hardness testing shall apply:

i. ASTM A833 supplementary requirement S1 shall be applied - the hardness test shall consist of three hardness readings. The average of these three readings shall be reported as the test result;

ii. Hardness tests shall be performed on the side exposed to the process fluid when possible;

iii. Hardness testing results shall be expressed in Brinell numbers. The hardness report shall indicate actual hardness reading for the test method used plus Brinell conversion. The use of methods other than portable Brinell tester require CONTRACTOR approval. Conversion shall be in accordance with ASTM E140;

iv. Hardness tests shall be performed after PWHT when PWHT is required;

v. The hardness test report shall also include the details of the personnel conducting hardness tests and last calibration date.

vi. The CONTRACTOR representative(s) may witness the performance of production hardness testing. The documented test results shall be submitted to the CONTRACTOR when requested.

vii. For downstream refinery applications, all pressure-retaining welds that fall within the scope of NACE SP0472 shall be hardness tested after final PWHT. Weld metal hardness shall not exceed 200 HBW. Unless exempted by NACE SP0472, the SUPPLIER shall perform Brinell hardness tests on every 3m of main seam weld, but not less than one set of readings for each main seam. One Brinell hardness reading shall be taken on each nozzle weld, manway weld and piping buttweld. When access is available, tests shall be performed on the process contacted side of the weld.

viii. Hardness test results and locations shall be recorded.

E3-6.1.1.3 Weld Procedure Qualification Hardness Testing

Each PQR shall include a macro section and Vickers hardness readings - indicated as per NACE SP0472 with minimum 3 hardness measurement indentations in each area of the HAZ and in each of the weld metal base metal. Testing shall be in accordance with ASTM E92.

E3-6.1.2 Non-destructive Examination

E3-6.1.2.1 Ultrasonic and Radiographic Testing

a. Both methods of either UT or RT, and the associated acceptance criteria, shall be in accordance with the specified code and performed in accordance with the written procedures.

b. All weld seams require 100 % UT, to be performed by the method as specified within this specification.

c. If equipment contains any components requiring impact testing, then all butt welds on that equipment shall be 100% RT inspected.

d. UT shall be used where the component geometry makes RT impractical for use.

e. All tie-in welds shall be radiographed in accordance with the relevant project specifications.

All parties consent to this document being signed electronically -PT&CS/GP/INT/2022/5777

E3-6.1.2.2 Penetrant Testing

a. All equipment welds shall be designed and fabricated to permit examination by a method of penetrative or particle testing. For CS items and components, the method shall be WFMT, and for SS and CRA materials this shall be PT.

b. 100 % of welds shall be WFMT / PT examined after PWHT. Testing shall be limited to internal (process contacted) weld surfaces on the pressure boundary. This includes butt, nozzle and attachment welds, including both sides of the attachment for internal fillet welds. Testing shall be in accordance with project welding and NDE Specification and the following requirements, unless otherwise authorized by the CONTRACTOR and the COMPANY:

c. Brushing or grinding) shall be performed to provide a suitable surface for WFMT. Removal of slag, spatter, arc strikes, and heat treatment oxides shall be completed prior to performing NDE;

d. WFMT shall be performed after PWHT;

e. The AC magnetic yoke method shall be used when WFMT is specified after PWHT;

f. Typical “non-relevant” surface discontinuities such as scratches, undercut, sharp angled contours, cold lap or porosity shall be thoroughly investigated by the examiner to ensure their acceptability.

g. UT shall be used in lieu of WFMT with the prior approval from the Contractor if there is no access to the internal weld surfaces.

All parties consent to this document being signed electronically -PT&CS/GP/INT/2022/5777