ADNOC GAS
LONG TERM - EXECUTE STAGE
PROJECT 5.0 (P5)
EPCm FOR HABSHAN DBN
COMPANY PROJECT No. 30201-50150-LT-HE
WORK ORDER NO. 3000076501

Comments Resolution Sheet (CRS) - EPCm

COMPANY Trans. No.	**ADNOCGP-WTRAN-023421**	**Received Date:**	**3-Feb-26**
COMPANY Doc. No.:	**DC-30201_50150_LT_HE-H4-278-17-23-004**	**Revision:**	**B**
Document Title:	**FOUNDATION GA & DETAILS OMS-201**	**Status Code:**	**Code 2**
ADNOC PM:	**Dr Azharuddin Mohammed**	**EPCm. CONTRACTOR PM:**	**Sriram PS**
ADNOC Reviewer:	**Mr Abhishek Srivastava, Mr Sreekanth Nuthanapati, Mr Vinodhkumar Ranganathan**	**EPCm. CONTRACTOR Originator:**	**Ankita Chatterjee**

Review Codes:
- ☐ **Code-1: Rejected**
- ☐ **Code-3: No Comments**
- ☑ **Code 2: Comments as Noted**
- ☐ **Code 4: For Information Only**

REVISION A

No.	COMMENT SECTION/ CLAUSE / DRAWING REFERENCE		COMPANY Comment	COMPANY Reviewer	EPCm CONTRACTOR Response	Open/Closed	COMPANY Response (If Comments are still open / Not incorporated or if Eng Contractor Response Not Acceptable)	EPCm CONTRACTOR Response	Open/Closed	Remarks
1		1	Update with appropriate Building number	Mr Vinodhkumar Ranganathan	Noted and Updated with appropriate building number		Noted, Attach Approval reference.	Approval reference attached Dear Sir/Madam, Please find attached the response from Emirates for building tagging for your consideration. Kindly, it is understood that Building tagging is not required by Building Design/Planning procedure. Regards Emirates Transmission Emirates Power Company Project Director, Gas Injection 2 PO Box 35, Abu Dhabi, UAE Mob: +971 50 [redacted] Email: [redacted] [redacted] Sent: Monday, January 26, 2026 12:07 PM To: [redacted] Cc: [redacted] Subject: [redacted] Dear Sirs [redacted]		
2		2	Ensure that the location of the building is approved by CPY HSE	Mr Vinodhkumar Ranganathan	CPY HSE to approve the location of building.	OPEN		CPY HSE YET TO APPROVE BUILDING LOCATION		
3		2	Update to show all the UG items	Mr Vinodhkumar Ranganathan	Noted and all UG items are updated	OPEN	Comment not incorporated.Update	noted & incorporated		
4		2	When wall extended from foundation, Centre line of wall and foundation should have been aligned. Justify the proposal.	Mr Vinodhkumar Ranganathan	outer face of wall and column is aligned as per architectural requirement.		Noted			
5		2	correct the pointer	Mr Vinodhkumar Ranganathan	Noted and Updated		Noted			
6		2	Mention where to refer the Grade slab details	Mr Vinodhkumar Ranganathan	Noted and grade slab reference details are updated		Noted			
7		2	RCC wall? check the requirement and update as required	Mr Vinodhkumar Ranganathan	RCC WALL REMOVED AS PER LATEST ARCHITECTURAL DRAWING.	OPEN	CRS reply not aligned with drawing. Comment not complied. Update	drawing updated.		
8		2	Update to show all the required cut-outs/sleeves for envisaged UG items.	Mr Vinodhkumar Ranganathan	Noted . As both buildings are blast resistant and have identical geometry hence one common calculation is prepared.	OPEN	Comment not incorporated.Update	Cutouts are currently kept under hold.		
9		2	Update per feedback provided on the design calculations related to the requirement of two separate reports and other comments	Mr Sreekanth Nuthanapati	Noted and updated as per the calculations		Noted			
10		2	Update to show the embankment extent	Mr Vinodhkumar Ranganathan	UG combosite layout is not yet updated.	OPEN	Update to show existing embankment, and include reference drawing numbers for any modification of the same	embankment is far from building , not coming in drawing as per scaled distance.		
11		2	Architectural drawings shall be in code 3 before the IFC of the foundation drawings.	Mr Vinodhkumar Ranganathan	Noted.	OPEN	Open.Provide the response	Arch drawing under progress,shall be issued later		
12		2	Any update required based on the UG detection survey and slit trenching shall be carried out.	Mr Vinodhkumar Ranganathan	Noted.	OPEN	Open.Provide the response	Slit trench is proposed. but activity not performed.		
13		2	EPCM to reverify with the execute stage Geotechnical report before the Final submission.	Mr Vinodhkumar Ranganathan	Noted.	OPEN	Open.Provide the response	verified with nearest Bore hole data in Execute stage geotech report.		
14		2	Any update required based on the 3D model review comments shall be carried out.	Mr Vinodhkumar Ranganathan	Noted.	OPEN	Open.Provide the response	model review in progress,		
15		2	Any update required based on the comments in structural and Foundation calculation report shall be carried out.	Mr Vinodhkumar Ranganathan	Noted and incorporated.		Noted			
16		2	Ensure 3D model and drawings align each other.	Mr Vinodhkumar Ranganathan	Noted.		Noted			
17		2	Update to add the MTO table	Mr Vinodhkumar Ranganathan	Noted and updated the MTO table		Noted			
18		2	Update to add the GWT in terms of level.	Mr Vinodhkumar Ranganathan	Depth of water table is mentioned in calculation report, based on that suitable concrete protection type is mentioned in drawing sections.	OPEN	Update to mention EL of GWT in drawing	GWT EL mentioned as per nearest bore hole data from execute stage geotechnical report.		
19		2	Align with Materials and corrosion for the criticality. Also, align with CP vendor for the required details and execute during the foundation casting. Ensure to align the timeline with CP vendor	Mr Vinodhkumar Ranganathan	Noted.	OPEN		CP Vendor not finalised yet		
20		2	Define type of protection based on GWL considering seasonal variation	Mr Sreekanth Nuthanapati	Protection type is mentioned in section.	CLOSED	Noted			
21		2	Add a table with grade of concrete, rebar and clear cover for foundation, column, beam	Mr Vinodhkumar Ranganathan	Noted and incorporated.		Noted			
22		3	check the detailing code and update the shape as required. seems to be not okay. Typical comment	Mr Vinodhkumar Ranganathan	Noted and incorporated.		Noted			
23		3	Extend the pedestal rebar	Mr Vinodhkumar Ranganathan	Noted and pedestal rebar extended.		Noted			
24		3	Update to shown the lapping staggering distance	Mr Vinodhkumar Ranganathan	Noted and incorporated.		Noted			
25		4	Update the detailing considering RC wall and no grade beam	Mr Sreekanth Nuthanapati	Detail with grade beam retained as per standard drawing.		Noted			
26		4	For blast resistant, detailing shall be as per SMRF. Check and update	Mr Vinodhkumar Ranganathan	Noted and incorporated.		Noted			
27		4	Seems to be not okay. Reverify and update as required	Mr Vinodhkumar Ranganathan	Rebar size optimised.		Noted			
					REV B					
		3	Please refer the E08 type standard earthing installation from drawing 30201_50150_LT_HE-GG-000-16-21-001 for REINFORCEMENT CONCRETE STRUCTURE	Mr Kiranbhai Kuntmal	Earthing standard is added to reference drawing list.					
		4	Update to show separate description for bars with varying length in this portion. Typ. comment	Mr Mandar Nadgouda	Noted & Incorporated					
		4	Update to show dimensions from edge	Mr Mandar Nadgouda	Noted & Incorporated					
		4	Not matching with calculation report. Update to align drawings and calculation report.	Mr Mandar Nadgouda	Drawing and Calculation Aligned					
		4	Check for side bars and update. Typ. comment	Mr Mandar Nadgouda	Side bars added for 600 thick foundation					
		4	Add section to show reinf details at junction of wall and foundation.	Mr Mandar Nadgouda	Noted & Incorporated					
		4	Update to add reinf details at junction of wall and column. (corner detail). Typ. Comment	Mr Mandar Nadgouda	Noted & Incorporated					
		4	3 ties minimum within footing depth. Update. Typ. comment	Mr Mandar Nadgouda	Noted & Incorporated					
		4	Show location of rebar splice with distance for staggering.	Mr Mandar Nadgouda	Noted & Incorporated					
		1	1. Ensure to finalize the Architectural drawings and align with all the respective disciplines. Highly recommend to arrange a session/workshop to resolve the Hold list on Archi. drawings and agree on the building size, room size, building location and cable entry locations & levels before the next submission. 2. EPCM to provide the status of other disciplines critical deliverables and demonstrate the basis of issuing the Foundation drawings for construction. 3. Refer the comments in design report and update as required. 4. Any update required based on the Final plot plan shall be carried out. 5. Any update required based on the model review comments shall be carried out. 6. Any update required based on the Execute stage Geotech reports shall be carried out. 7. Any update required based on the CPY HSE approved QRA/FERA report shall be carried out. 8. Update the status of CP vendor. Ensure to align with CP vendor and provide the CP installation drawings to GCC1 to execute under the supervision of CP vendor. Expedite to conclude at the earliest. 9. Finalize the cable entries/exit and ensure the clash free and feasible proposal. 10. Any update required based on the slit trenching shall be carried out.	Mr Vinodhkumar Ranganathan	1. Architectural drawing is in progress, shall be issued later. 2. The electrical earthing layout, electrical cable layout are in the final stage of preparation, however it is ensured that the same does not have any impact in foundation layout. 3. Noted and incorporated in the foundation drawing. 4. Final plot plan is not yet available. 5. Model review is in progress. 6. Bore hole data is not available yet in execute stage soil report 7. Noted. The design is finalized based on the earlier conservative input from HSE. Hence will not have any impact on foundation. 8. CP vendor is not finalised yet. 9. As discussed with electrical, it is ensured that the cable entry/exit does not impact the foundation layout/arrangement. 10. Slit trench is proposed. but activity not performed.					
		4	Recommend to consider T10 @ 100 inside the footing for the buildings	Mr Vinodhkumar Ranganathan	Noted & Incorporated					
		2	Check location of maintenance shed, not matching with 3d model and plot plan. Update to align 3d model and drawings.	Mr Mandar Nadgouda	Location of maintenance shed is matching as per Arch drawing. Plot plan and 3D model to be updated yet.					
		2	check and update to correct wall type	Mr Mandar Nadgouda	updated					
		2	Update to move text.	Mr Mandar Nadgouda	updated					
		2	Not matching with Arch dwgs. Ensure to align Arch dwgs and Conc foundation dwgs. Typical comment.	Mr Mandar Nadgouda	Noted & Incorporated					
		2	Add section to show details at junction of wall and foundation.	Mr Mandar Nadgouda	Noted & Incorporated					
		2	Check TOC and update to correct.	Mr Mandar Nadgouda	Noted & Incorporated					
		2	Update to mention above ground concrete protection. Typ. comment.	Mr Mandar Nadgouda	Noted & Incorporated					
		2	Update to indicate UG trenches and show cutouts in walls for cable entry. Typical comment.	Mr Mandar Nadgouda	Noted & Incorporated					
		2	TO be updated as per Toilet slab TOC.	Mr Mandar Nadgouda	Noted & Incorporated					

DRAWING NO.	DRAWING TITLE	SHEET	SHEET TITLE
30201_50150_LT_HE-H4-278-17-23-004	UNIT 278 -HABSHAN 4 FOUNDATION GA & DETAILS OMS-201	01	DRAWING INDEX
		02	FOUNDATION LAYOUT & DETAILS
		03	FOUNDATION RC DETAILS
		04	COLUMN RC DETAILS

REV	DATE	DESCRIPTION	DRAWN	CHKD	APPRD
0	03-FEB-2026	ISSUED FOR CONSTRUCTION WITH HOLD (IFCH)	RRR	ACH/AC	VV/MS
B	27-JAN-2026	ISSUED FOR APPROVAL (IFA)	SUT	ACH/BH	VV/MS
A	12-DEC-2025	ISSUED FOR COMPANY REVIEW (ICR)	SUT	ACH/BH	CS/MS

SCALE:	DRAWN:	CHKD:	APPRD:
1:100	SAULE	ANKITA/ANIRBAN	VISWANATH

أدنوك للغاز
ADNOC Gas

EPCm CONTRACTOR: wood.

EPCm CONTRACTOR: AMEC INTERNATIONAL LTD.

PROJECT TITLE
PROJECT 5.0 (P5)
LONG TERM - EXECUTE STAGE
EPCm FOR HABSHAN DBN

DRAWING TITLE
UNIT 278 – HABSHAN 4
FOUNDATION GA & DETAILS OMS–201
DRAWING INDEX

UNIT: 213 | PLANT: HABSHAN COMPLEX
CONTR. PROJ. No. 3000076501 | CONT. DWG. No.: N/A
ADNOC GAS AGREEMENT No. 3000076501

ADNOC GAS PROJ. No.	ADNOC GAS DWG. No.	SHEET	REV.
30201_50150_LT_HE	30201_50150_LT_HE-H4-278-17-23-004	01 OF 04	0

SHEET SIZE : A1

NOTICE: THIS DRAWING AND THE INFORMATION IT CONTAINS IS THE SOLE PROPERTY OF ADNOC GAS
IT SHALL NOT BE REPRODUCED OR LENT WITHOUT THE AGREEMENT OF THE OWNER

CAD NO.: 30201_50150_LT_HE-H4-278-17-23-004_0.dwg

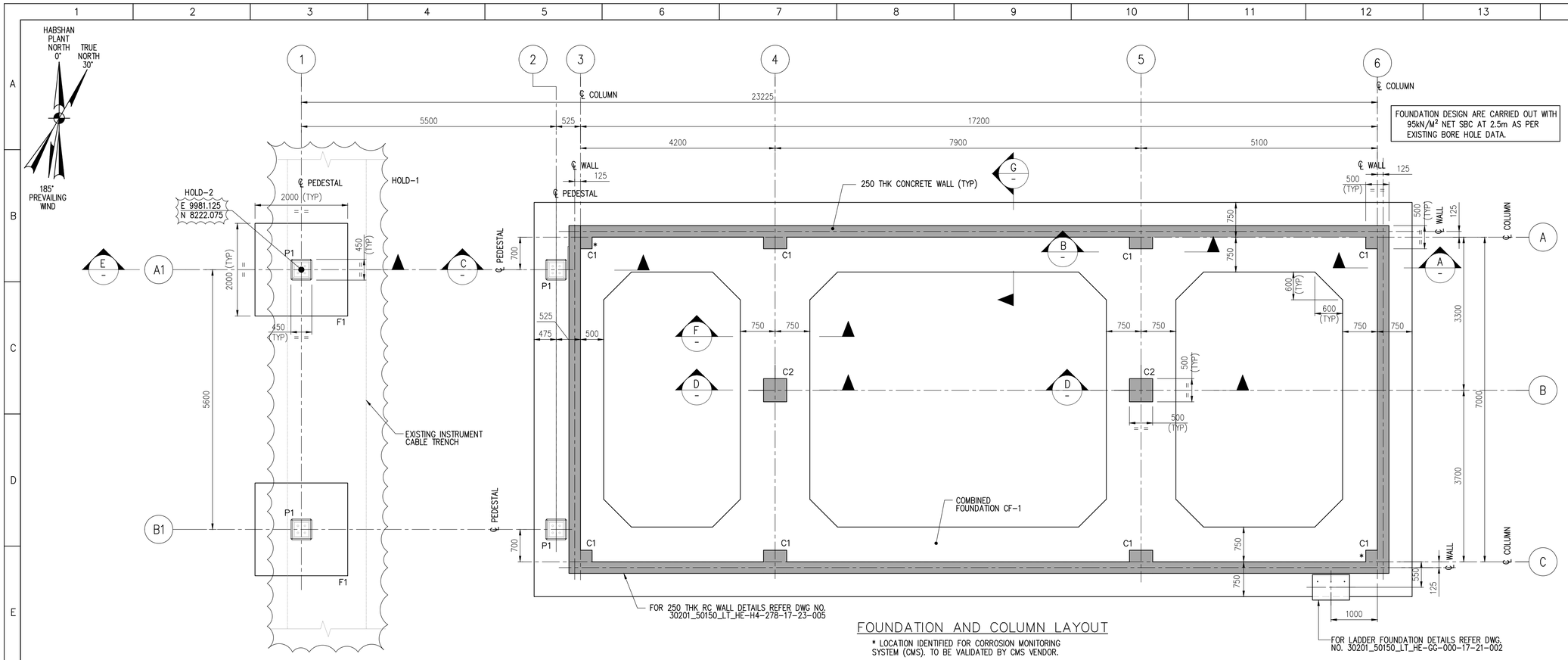

FOUNDATION AND COLUMN LAYOUT

* LOCATION IDENTIFIED FOR CORROSION MONITORING SYSTEM (CMS). TO BE VALIDATED BY CMS VENDOR.

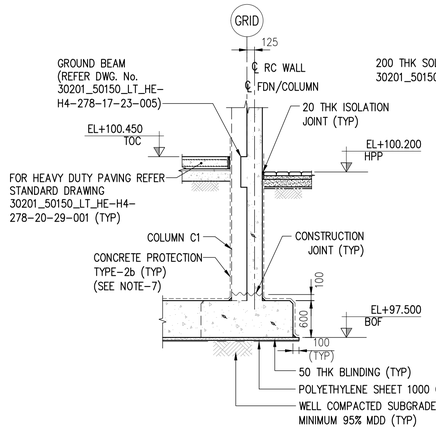

A SECTION (FORMWORK)

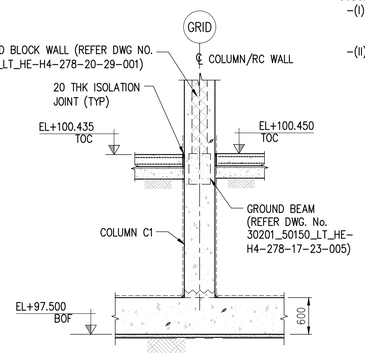

B SECTION (FORMWORK)

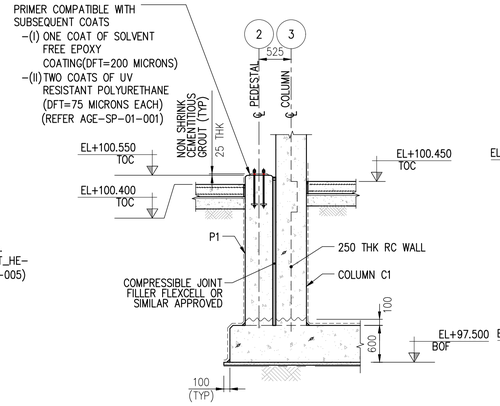

C SECTION (FORMWORK)

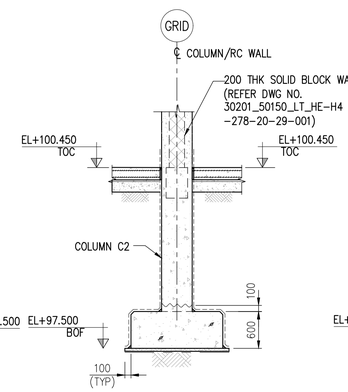

D SECTION (FORMWORK)

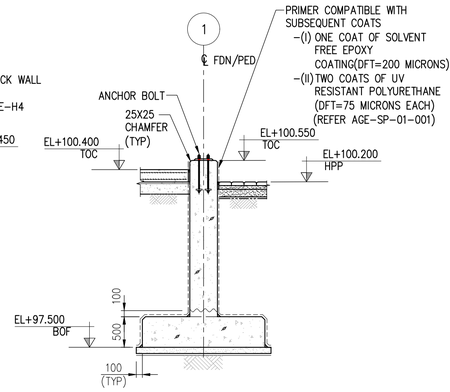

E SECTION (FORMWORK)

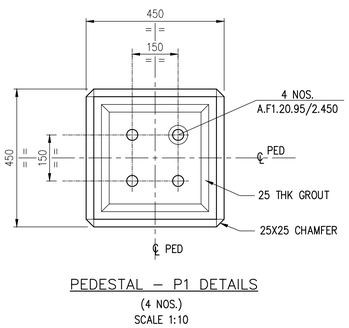

PEDESTAL – P1 DETAILS

(4 NOS.)

SCALE 1:10

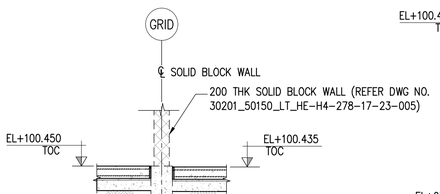

F SECTION (FORMWORK)

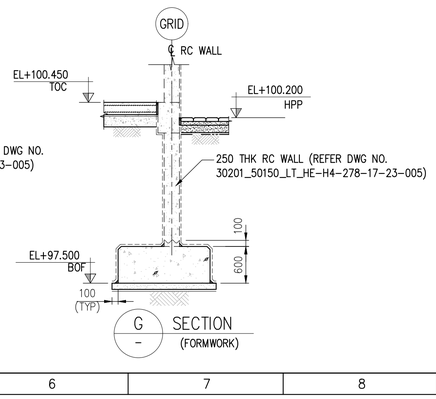

G SECTION (FORMWORK)

NOTES

1. ALL DIMENSIONS ARE IN MILLIMETERS UNLESS NOTED OTHERWISE.
2. ALL COORDINATES AND ELEVATIONS ARE IN METERS UNLESS NOTED OTHERWISE.
3. THE COORDINATES MENTIONED ARE IN PLANT COORDINATES AND ELEVATIONS MENTIONED ARE IN JABEL DHANA CHART DATUM (JDCD)
4. FGL.EL. 100.000 CORRESPONDS TO 81.000 ELEVATION BASED ON JEBEL DHANNA DATUM (JDD) AND 82.010 ELEVATION BASED ON NEW ABU DHABI DATUM (NADD).
5. PLANT COORDINATES E 9431.910, N 7903.650 EQUAL TO UTM COORDINATES E 769200.960, N 2637528.035.
6. FOR GENERAL NOTES, ABBREVIATIONS AND SYMBOLS – CONCRETE WORKS REFER STANDARD DRAWING 30201_50150_LT_HE-GG-000-17-11-001.
7. FOR DETAILS OF PROTECTION TO CONCRETE FOUNDATIONS AND PEDESTALS REFER STANDARD DRAWING NO. 30201_50150_LT_HE-GG-000-17-31-002.
8. THIS FOUNDATION IS CONSIDERED TO BE CRITICAL FOUNDATION INLINE SOW-30201_50150_LT_HE-GG-000-63-22-001 AND CORROSION MONITORING SYSTEM SHALL BE PROVIDED AS PER AGES STANDARD DRAWING AGES-STD-01-108. REBAR ELECTRICAL CONTINUITY SHALL BE CHECKED AND ENSURED BEFORE CONCRETE POURING..
9. EPCm CONSTRUCTION CONTRACTOR SHALL ENSURE THAT EXCAVATION & EXECUTION SHALL BE CARRIED OUT DURING NORMAL WIND CONDITIONS ONLY.
10. EXISTING UNDER GROUND SERVICES SHALL BE VERIFIED WITH SLIT TRENCH AND SHALL BE SUITABLY REROUTED IN AGREEMENT WITH COMPANY END-USER, BEFORE START OF WORKS.
11. GWT ELEVATION AS PER EXECUTE STAGE SOIL REPORT IS 72.210 (CONSIDERING 1M SEASONAL VARIATION) AS PER JDCD.

LEGEND

TOC	TOP OF CONCRETE
FGL	FINISHED GRADE LEVEL
BOF	BOTTOM OF FOUNDATION
HPP	HIGH POINT OF PAVING

HOLD

1. TRENCH INSIDE & AROUND BUILDING.
2. BUILDING COORDINATES AND LOCATION.
3. CUTOUTS/SLEEVES FOR CABLES OR PIPE ENTRY/EXIT.
4. EARTHING LUG LOCATION.

REFERENCE DRAWINGS

30201_50150_LT_HE-H4-277-13-60-005	PLOT PLAN UNIT-277 INTERCONNECTING PIPERACK PLAN VIEW
30201_50150_LT_HE-H4_278-20-29-001	UNIT 278 – HABSHAN 4 ARCHITECTURAL LAYOUT AND DETAILS OMS-1 BUILDING – SETTING OUT PLAN
30201_50150_LT_HE-H4-278-17-23-005	CONCRETE LAYOUT AND DETAILS FOR OMS-201- SUPER STRUCTURE
30201_50150_LT_HE-H4-278-17-23-005 SHT.X	OMS 201 – MAINTENANCE SHED STRUCTURAL FRAME PLAN DETAILS
30201_50150_LT_HE-GG-000-17-21-001	ANCHOR BOLT DETAILS
30201_50150_LT_HE-GG-000-17-11-002	TYPICAL CONCRETE GA AND REINFORCEMENT DETAILS
30201_50150_LT_HE-GG-000-16-21-001	TYPICAL INSTALLATION DETAILS (EARTHING AND LIGHTING SYSTEM)

KEY PLAN

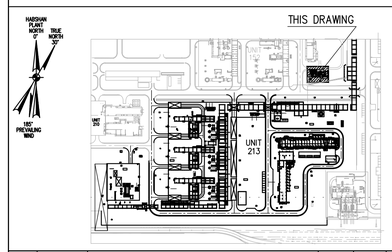

REV	DATE	DESCRIPTION	DRAWN	CHKD	APPRD
0	03-FEB-2026	ISSUED FOR CONSTRUCTION WITH HOLD (IFCH)	RRR	ACH/AC	VV/MS
B	27-JAN-2026	ISSUED FOR APPROVAL (IFA)	SUT	ACH/BH	VV/MS
A	12-DEC-2025	ISSUED FOR COMPANY REVIEW (ICR)	SUT	ACH/BH	CS/MS

SCALE:	DRAWN:	CHKD:	APPRD:
AS SHOWN	SAULE	ANKITA/ANIRBAN	VISWANATH

ADNOC Gas

EPCm CONTRACTOR: wood.

EPCm CONTRACTOR: AMEC INTERNATIONAL LTD.

PROJECT TITLE: PROJECT 5.0 (P5) LONG TERM - EXECUTE STAGE EPCm FOR HABSHAN DBN

DRAWING TITLE: UNIT 278 – HABSHAN 4 FOUNDATION GA & DETAILS OMS-201 FOUNDATION LAYOUT & DETAILS

MATERIAL OF CONSTRUCTION

PARTICULARS	TYPE
BLINDING CONCRETE	f'c = 20 MPa 28 DAY CUBE STRENGTH
RCC	f'c = 40 MPa 28 DAY CUBE STRENGTH
REINFORCEMENT	fy = 500 N/MM2 (MINIMUM YEILD STRENGTH 500 MPA – BS44449)

CLEAR COVER TO REINFORCEMENT SHALL BE AS BELOW:

TYPE	TOP	BOTTOM	SIDE
FOUNDATION /WALL/ COLUMN BELOW GRADE	75	75	75
GRADE BEAM	75	75	75
COLUMN ABOVE GRADE	50	50	50

BILL OF MATERIALS

SL.No	ITEM	UNITS	QUANTITY
1	CONCRETE	CU.M	76.200
2	BLINDING CONCRETE	CU.M	6.0
3	NON-SHRINK CEMENTITIOUS GROUT	CU.M	0.020
4	ANCHOR BOLT A . F1 . 20 . 95/2 . 450	NOS.	16

SCALE OF METRES 1:10

SCALE OF METRES 1:50

UNIT: 213	PLANT: HABSHAN COMPLEX		
CONTR. PROJ. No. 3000076501	CONT. DWG. No.: N/A		
ADNOC GAS AGREEMENT No.3000076501			
ADNOC GAS PROJ. No. 30201_50150_LT_HE	ADNOC GAS DWG. No. 30201_50150_LT_HE-H4-278-17-23-004	SHEET 02 OF 04	REV. 0

NOTICE: THIS DRAWING AND THE INFORMATION IT CONTAINS IS THE SOLE PROPERTY OF ADNOC GAS IT SHALL NOT BE REPRODUCED OR LENT WITHOUT THE AGREEMENT OF THE OWNER

CAD NO.: 30201_50150_LT_HE-H4-278-17-23-004_S.dwg

16 SHEET SIZE : A1

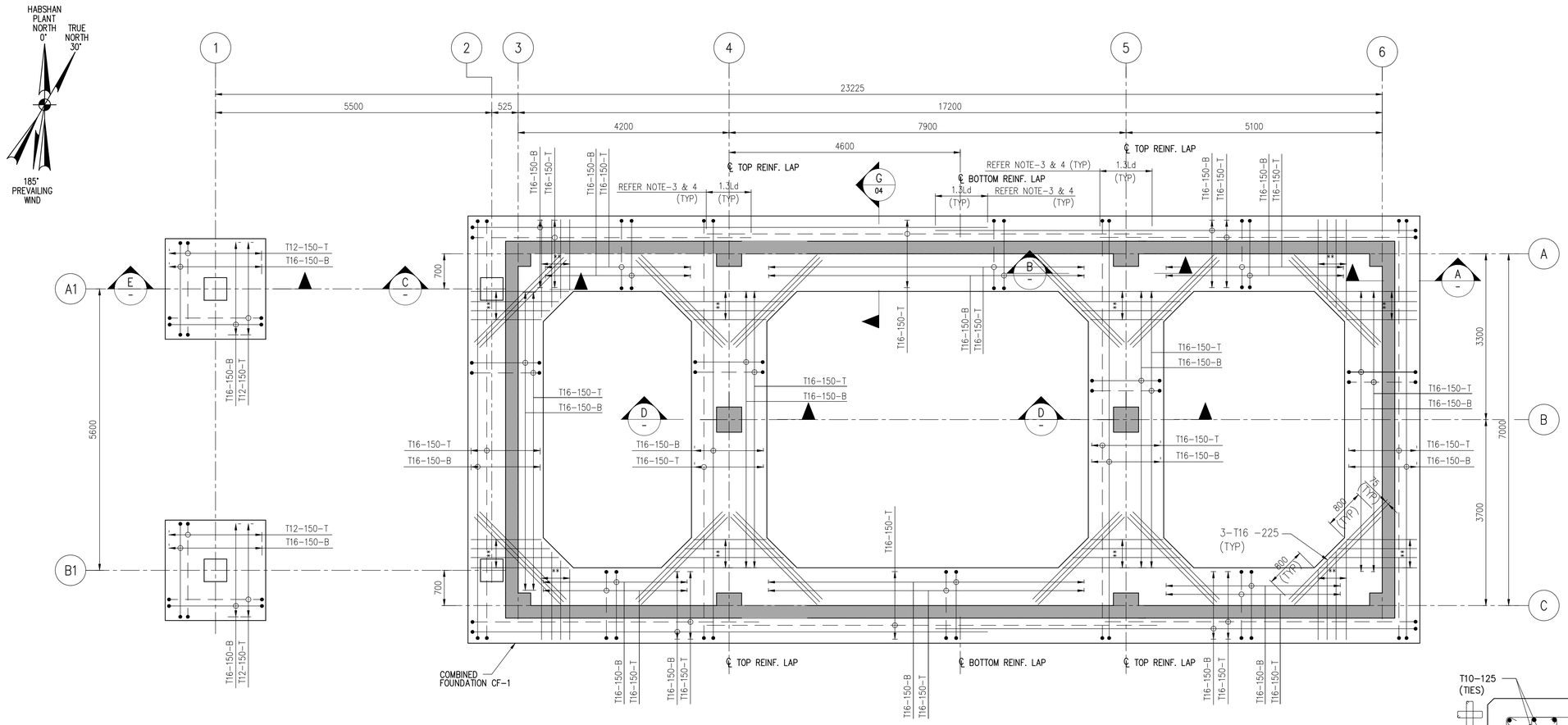

FOUNDATION REINFORCEMENT PLAN FOR CF-1 AND F1

** - BAR LENGTH VARIES
(SCALE 1:50)

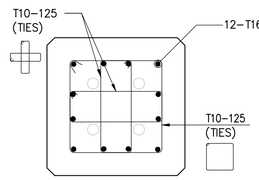

PEDESTAL - P1 RC DETAILS

SCALE 1:10

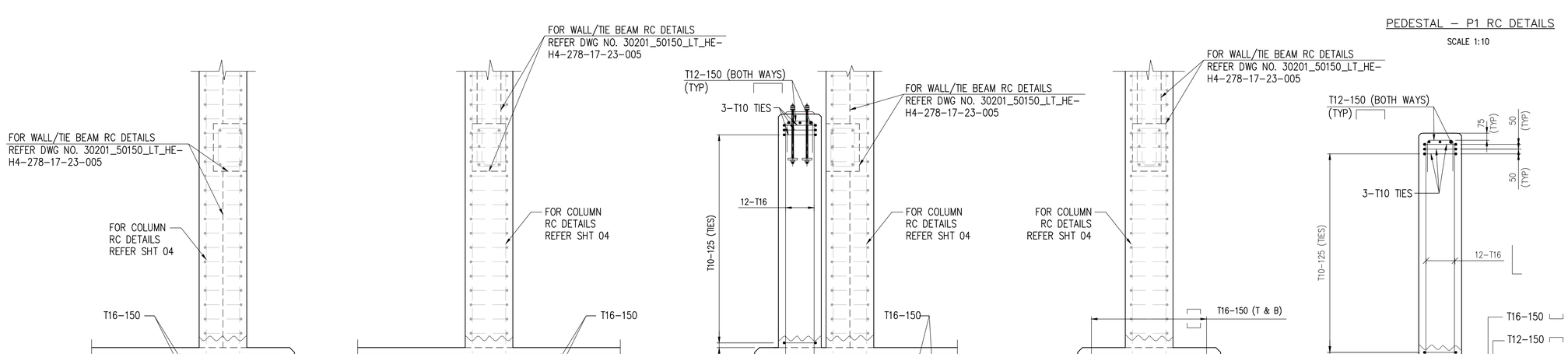

A SECTION
SCALE 1:25 (REINFORCEMENT)

B SECTION
SCALE 1:25 (REINFORCEMENT)

C SECTION
SCALE 1:25 (REINFORCEMENT)

D SECTION
SCALE 1:25 (REINFORCEMENT)

E SECTION
SCALE 1:25 (REINFORCEMENT)

NOTES

1. ALL DIMENSIONS ARE IN MILLIMETERS, COORDINATES AND ELEVATIONS ARE IN METERS UNLESS NOTED OTHERWISE.
2. FOR ALL OTHER NOTES, KEY PLAN, REFERENCE DRAWINGS, REFER DWG. NO. 30201_50150_LT_HE-H4-278-17-23-004, SHT-02.
3. DEVELOPMENT LENGTH (LD) SHALL BE MINIMUM 50 x BAR DIA. SPLICE LAPPING LENGTH SHALL BE 1.3 x LD. THE CENTER TO CENTER OF SPLICE STAGGERING SHALL NOT BE LESS THAN 1.3LD.
4. TYPICAL SPLICE LOCATION PROVIDED. BASED ON THAT SUITABLE SPLICE LOCATION SHALL BE ARRIVED DURING BAR BENDING SCHEDULE WHEREVER NOT SHOWN IN THE REINFORCEMENT PLAN. 50% OF REBAR SHALL BE SPLICED AT ONE LOCATION.

LEGEND

——— BOTTOM BARS
– – – – TOP BARS

0.2 0 0.2 0.4 0.6 0.8 1.0
SCALE OF METRES 1:10

0.5 0 0.5 1.0 1.5 2.0 2.5
SCALE OF METRES 1:25

REV	DATE	DESCRIPTION	DRAWN	CHKD	APPRD
0	03-FEB-2026	ISSUED FOR CONSTRUCTION WITH HOLD (IFCH)	RRR	ACH/AC	VV/MS
B	27-JAN-2026	ISSUED FOR APPROVAL (IFA)	SUT	ACH/BH	VV/MS
A	12-DEC-2025	ISSUED FOR COMPANY REVIEW (ICR)	SUT	ACH/BH	CS/MS

SCALE:	DRAWN:	CHKD:	APPRD:
AS SHOWN	SAULE	ANKITA/ANIRBAN	VISWANATH

ADNOC Gas

EPCm CONTRACTOR: wood.

EPCm CONTRACTOR: AMEC INTERNATIONAL LTD.

PROJECT TITLE
PROJECT 5.0 (P5)
LONG TERM - EXECUTE STAGE
EPCm FOR HABSHAN DBN

DRAWING TITLE
UNIT 278 - HABSHAN 4
FOUNDATION GA & DETAILS OMS-201
FOUNDATION RC DETAILS

UNIT: 213	PLANT: HABSHAN COMPLEX
CONTR. PROJ. No. 3000076501	CONT. DWG. No.: N/A
ADNOC GAS AGREEMENT No. 3000076501	

ADNOC GAS PROJ. No.	ADNOC GAS DWG. No.	SHEET	REV.
30201_50150_LT_HE	30201_50150_LT_HE-H4-278-17-23-004	03 OF 04	0

16 SHEET SIZE : A1

NOTICE: THIS DRAWING AND THE INFORMATION IT CONTAINS IS THE SOLE PROPERTY OF ADNOC GAS
IT SHALL NOT BE REPRODUCED OR LENT WITHOUT THE AGREEMENT OF THE OWNER

CAD NO.: 30201_50150_LT_HE-H4-278-17-23-004_0.dwg

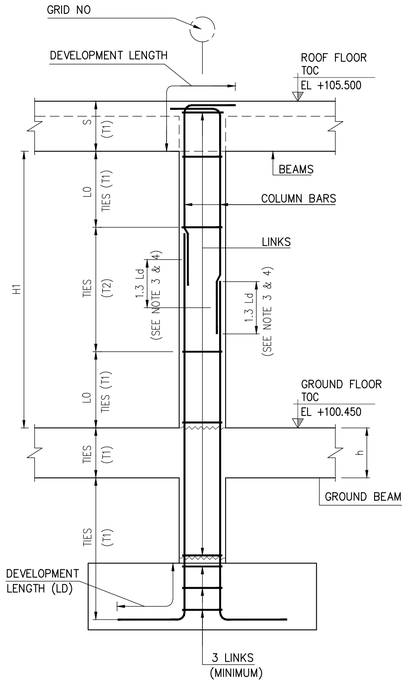

COLUMN C1/C2 REINFORCEMENT DETAILS

FOR SPECIAL MOMENT FRAMES
T1 MINIMUM OF a) 0.25 TIMES COLUMN SMALLEST CROSS-SECTIONAL DIMENSION b) FOR GRADE 420, 6 TIMES SMALLEST LONGITUDINAL REINFORCEMENT BAR DIAMETER FOR GRADE 550, 5 TIMES SMALLEST LONGITUDINAL REINFORCEMENT BAR DIAMETER c) 150mm d) AS CALCULATED PER EQ 18.7.5.3 OF ACI 318-19 AND SHALL NOT EXCEED 150mm AND NEED NOT BE TAKEN LESS THAN 100mm
T2 <= a) 150mm. b) 6 TIMES SMALLEST LONGITUDINAL REINFORCEMENT BAR DIAMETER FOR GRADE 420 C) 5 TIMES SMALLEST LONGITUDINAL REINFORCEMENT BAR DIAMETER FOR GRADE 550 AT COLUMN SPLICE LOCATION, T2 = MIN (d/4, 100mm), WHERE d IS COLUMN LEAST DIMENSION
LO :GREATER OF THE FOLLOWING a) MAX COLUMN DIMENSION b) 1/6 OF CLEAR HEIGHT OF COLUMN c) 450mm

h - OVERALL DEPTH OF BEAM
H1, H2 -CLEAR HEIGHT OF COLUMN

COLUMN REINFORCEMENT SCHEDULE

FLOOR \ COLUMN ID	C1 (500x500)		C2 (500x500)	
	T1 MAIN LINK	T2 LINK	T1 MAIN LINK	T2 LINK
	T10-100	T10-100	T10-100	T10-100
GRADE BEAM TO ROOF BEAM (EL +100.450 TO +105.500)	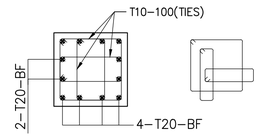			
FOUNDATION TO GRADE BEAM (EL +97.500 TO +100.450)	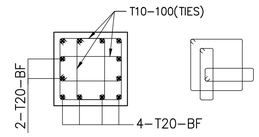		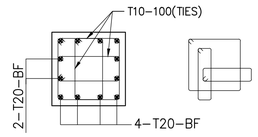	

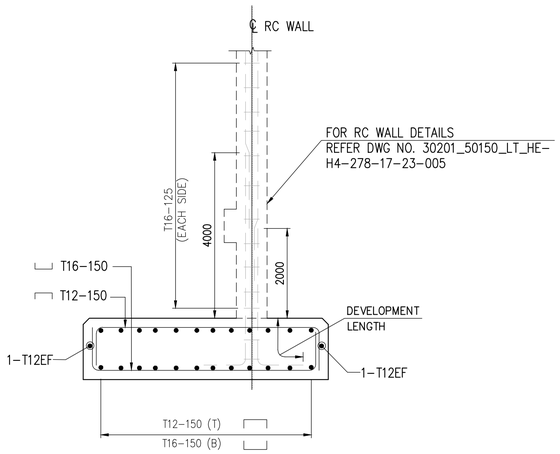

G / 03 SECTION
(REINFORCEMENT)
(NTS)

NOTES

1. ALL DIMENSIONS ARE IN MILLIMETERS, COORDINATES AND ELEVATIONS ARE IN METERS UNLESS NOTED OTHERWISE.
2. FOR ALL OTHER NOTES, KEY PLAN, REFERENCE DRAWINGS, REFER DWG. NO. 30201_50150_LT_HE-H4-278-17-23-004, SHT-02.
3. DEVELOPMENT LENGTH LD SHALL BE MINIMUM 50X BAR DIA. SPLICE LAPPING LENGTH SHALL BE 1.3XLD. THE CENTER TO CENTER OF SPLICE STAGGERING SHALL NOT BE LESS THAN 1.3 LD.
4. TYPICAL SPLICE LOCATION PROVIDED. BASED ON THAT SUITABLE SPLICE LOCATION SHALL BE ARRIVED DURING BAR BENDING SCHEDULE WHEREVER NOT SHOWN IN THE REINFORCEMENT PLAN. 50% OF REBAR SHALL BE SPLICED AT ONE LOCATION.

REV	DATE	DESCRIPTION	DRAWN	CHKD	APPRD
0	03-FEB-2026	ISSUED FOR CONSTRUCTION WITH HOLD (IFCH)	RRR	ACH/AC	VV/MS
B	27-JAN-2026	ISSUED FOR APPROVAL (IFA)	SUT	ACH/BH	VV/MS
A	12-DEC-2025	ISSUED FOR COMPANY REVIEW (ICR)	SUT	ACH/BH	CS/MS

SCALE:	DRAWN:	CHKD:	APPRD:
1:25	SAULE	ANKITA/ANIRBAN	VISWANATH

أدنوك للغاز
ADNOC Gas
ADNOC

EPCm CONTRACTOR: wood.

EPCm CONTRACTOR: AMEC INTERNATIONAL LTD.

PROJECT TITLE
PROJECT 5.0 (P5)
LONG TERM - EXECUTE STAGE
EPCm FOR HABSHAN DBN

DRAWING TITLE
UNIT 278 – HABSHAN 4
FOUNDATION GA & DETAILS OMS-201
COLUMN RC DETAILS

UNIT: 213 | PLANT: HABSHAN COMPLEX
CONTR. PROJ. No. 3000076501 | CONT. DWG. No.: N/A
ADNOC GAS AGREEMENT No. 3000076501

ADNOC GAS PROJ. No.	ADNOC GAS DWG. No.	SHEET	REV.
30201_50150_LT_HE	30201_50150_LT_HE-H4-278-17-23-004	04 OF 04	0

16 SHEET SIZE : A1

NOTICE: THIS DRAWING AND THE INFORMATION IT CONTAINS IS THE SOLE PROPERTY OF ADNOC GAS
IT SHALL NOT BE REPRODUCED OR LENT WITHOUT THE AGREEMENT OF THE OWNER

CAD NO.: 30201_50150_LT_HE-H4-278-17-23-004_0.dwg