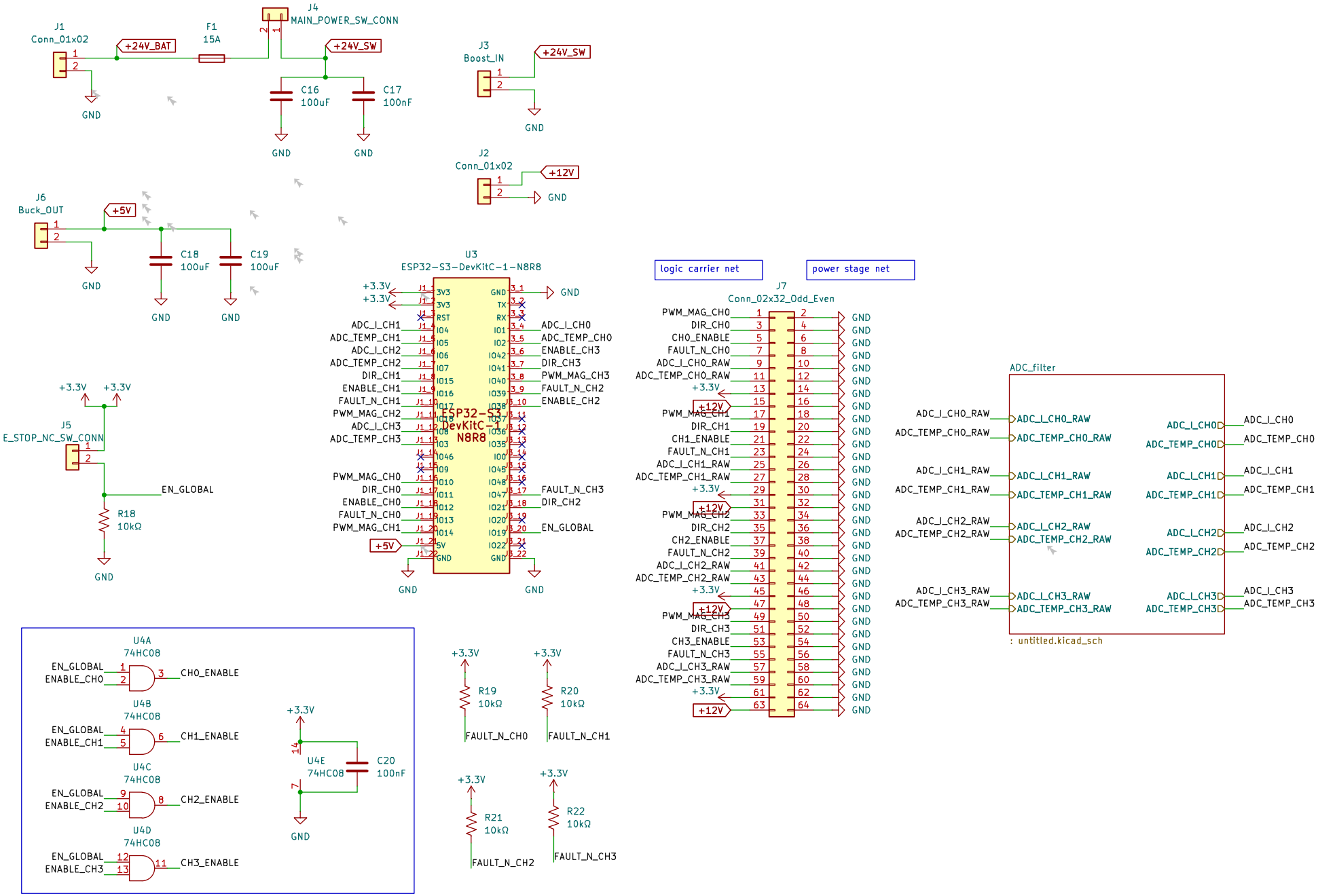
J1
Conn_01x02
+24V_BAT
F1
15A
J4
MAIN_POWER_SW_CONN
+24V_SW
C16
100uF
C17
100nF
GND
J3
Boost_IN
J2
Conn_01x02
+12V
J6
Buck_OUT
+5V
C18
100uF
C19
100uF
U3
ESP32-S3-DevKitC-1-N8R8
ESP32-S3-DevKitC-1-N8R8
+3.3V
ADC_I_CH1
ADC_TEMP_CH1
ADC_I_CH2
ADC_TEMP_CH2
DIR_CH1
ENABLE_CH1
FAULT_N_CH1
PWM_MAG_CH2
ADC_I_CH3
ADC_TEMP_CH3
PWM_MAG_CH0
DIR_CH0
ENABLE_CH0
FAULT_N_CH0
PWM_MAG_CH1
ADC_I_CH0
ADC_TEMP_CH0
ENABLE_CH3
DIR_CH3
PWM_MAG_CH3
FAULT_N_CH2
ENABLE_CH2
FAULT_N_CH3
DIR_CH2
EN_GLOBAL
J5
E_STOP_NC_SW_CONN
R18
10kΩ
logic carrier net
power stage net
J7
Conn_02x32_Odd_Even
ADC_filter
: untitled.kicad_sch
U4A
74HC08
U4B
74HC08
U4C
74HC08
U4D
74HC08
U4E
74HC08
C20
100nF
CH0_ENABLE
CH1_ENABLE
CH2_ENABLE
CH3_ENABLE
R19
10kΩ
R20
10kΩ
R21
10kΩ
R22
10kΩ

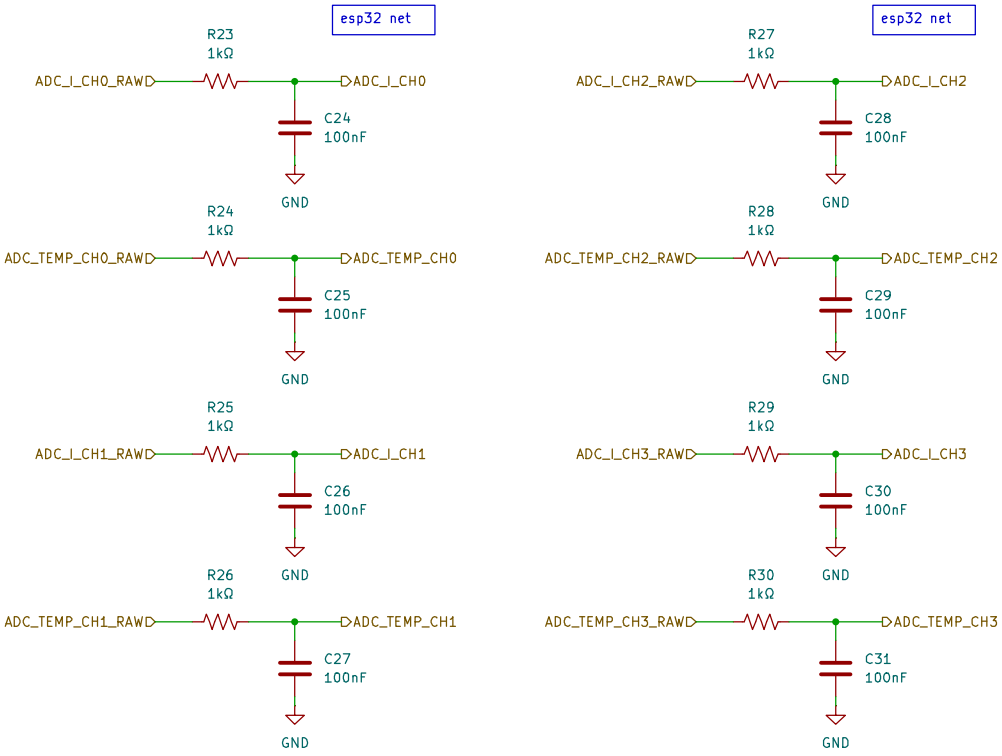
esp32 net
R23
1kΩ
ADC_I_CH0_RAW
ADC_I_CH0
C24
100nF
GND
R24
1kΩ
ADC_TEMP_CH0_RAW
ADC_TEMP_CH0
C25
100nF
GND
R25
1kΩ
ADC_I_CH1_RAW
ADC_I_CH1
C26
100nF
GND
R26
1kΩ
ADC_TEMP_CH1_RAW
ADC_TEMP_CH1
C27
100nF
GND
esp32 net
R27
1kΩ
ADC_I_CH2_RAW
ADC_I_CH2
C28
100nF
GND
R28
1kΩ
ADC_TEMP_CH2_RAW
ADC_TEMP_CH2
C29
100nF
GND
R29
1kΩ
ADC_I_CH3_RAW
ADC_I_CH3
C30
100nF
GND
R30
1kΩ
ADC_TEMP_CH3_RAW
ADC_TEMP_CH3
C31
100nF
GND