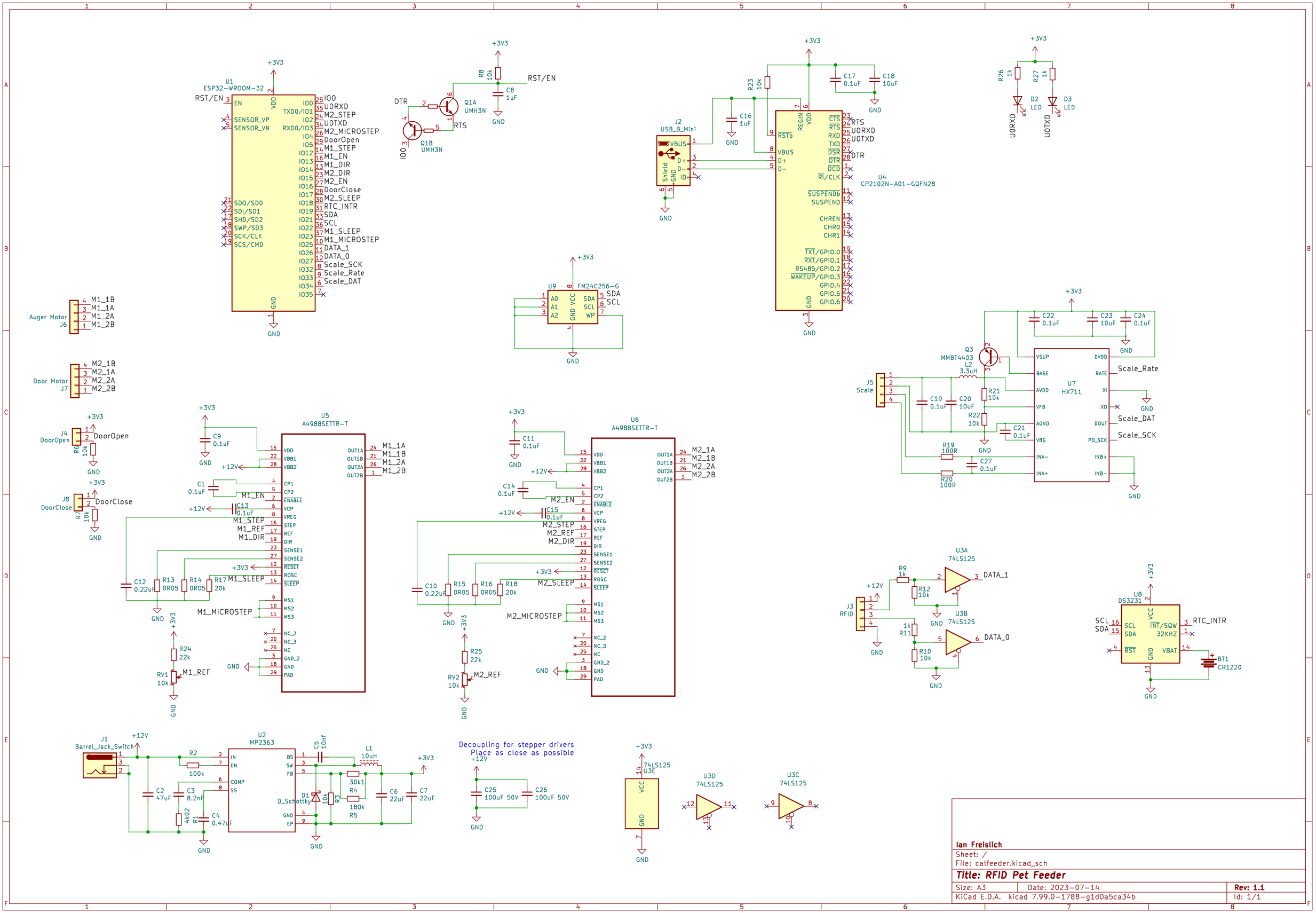

Ian Freislich

Sheet: /

File: catfeeder.kicad_sch

Title: RFID Pet Feeder

Size: A3	Date: 2023-07-14	Rev: 1.1
KiCad E.D.A. kicad 7.99.0-1788-g1d0a5ca34b		Id: 1/1