DEPARTMENT OF MECHANICAL ENGINEERING
RICE UNIVERSITY

MECH/ELEC/COMP 498/598: INTRODUCTION TO ROBOTICS

Lab #3
Inverse Kinematics: Robo Picasso

Due Tuesday, April 7th at 8am

Assignment Description

This assignment has some elements that require concentrated thought. You may want to start early to give yourself time to work. **For this assignment, undergraduate students may work in groups of 2.** You will be required to hand in **individual** paper submissions, and a group electronic submission.

This lab consists of taking your robot that you solved the inverse kinematics for in Lab2 and simulating it through a path. In this simulation, the robot will have a set of "brushes" attached to the end-effector that can draw in different colors. The input path will include the [X, Y, Z] position of the **paint** and the **color** of the paint. Finally, you will be asked to create your own "drawing" for the robot to do and show that it can draw your artwork. The 3 most creative solutions will receive bonus points.

NOTE: The input path is **not** the position of the end-effector, it is the position of the brush. And, as described later, the brushes are at lengths and angles from the end-effector.

You will receive a base class **`fanuc_provided.yaml`** that implements the Fanuc class like you did for lab2. However, this **`fanuc_provided.yaml`** comes with a .so file that implements the full IK properly. This will ensure that the IK is not the issue when completing this lab. **`Picasso.py`** has the methods that you need to fill in and inherits from Fanuc.

Submission Instructions

Your submission for this assignment will have an electronic and a paper component. The paper submission can be turned in to the box outside of the MAHI Lab, to the MECH dropbox in the Mechanical Engineering Building, or in class.

For the electronic submission, just as the previous labs, you will upload your code via the gradescope auto-grader for the Lab3 submission. You must zip all of your code into one .zip file for submission. You may submit as many times as you want before the deadline. The auto-grader is written such that it will tell you where it's failing, to give you a debugging tool. The result from the auto-grader IS your score for the electronic portion of the lab. If it says 35/35, that is what you will get.

1. [35 points] Using **`calculate_fk`** and **`calculate_ik`**, complete the function **`calculate_picasso_path(starting_angles, path_file)`**. For this method, only the framework is provided. You will need to take in a string of the path to your .yaml file. The provided code converts this to a dictionary, and you must take it from there. The yaml file is a discretized path through space for the x, y, and z locations as well as the brush colors at each location. The output of this method is a 7xN matrix with the [x, y, z, roll, pitch, yaw, brush_color] values at each timestep of your simulation. Note: Orientation is not provided, that's up to you to pick. (I often left mine constant). These paths should move your robot continuously through space.

   The provided positions are the desired location of the BRUSH tip, not of the end-effector, be sure to convert the brush location to end-effector location in the method **`get_ee_pose_from_brush()`** (the autograder will check if you did it right). Also, be sure that the transition from brush to brush is smooth. When moving through the path, the robot should move smoothly and be continuous, there should not be large jumps in joint angle at any time. Per the auto-grader, a "large jump" is any joint moving more than 5 deg in one calculation iteration.

   Be sure to change the brush you're using depending on the color selected as well. You can change which brush the robot is using by setting the brush from 0 (no brush) or any of the four brushes (1-4) by **`self.brush.selection = value`** where value is the desired number.
   Two path options have been provided to you to try out, **`tetra.yaml`** and **`prism.yaml`**. Use these to test out your robot. Note, that these shapes should be continuous, there are no large gaps that should exist, if there are, double check your work! The auto-grader will evaluate your code along both of these paths.

   Once you have filled in **`get_ee_pose_from_brush()`** and **`calculate_picasso_path()`** you can simulate the robot with the provided code **`draw_picasso_path()`**

2. [15 points] Draw something colorful! The path files provided were simply for testing, and are not very interesting. They also trace over themselves with different colors. This part of the assignment is intentionally open ended, and you will quickly realize that you can take an increasingly more sophisticated and approach to handling the problem if you wish to put in the work. The more creative you are, the more points you will be awarded. Also, the more creative you are, the better your IK solver and drawing code must work.
   a. A "simple" shape will be awarded 5 points (a set of basic geometry like squares, triangles, circles).
   b. Something more complex, but non-creative will earn 10 points (like a smooth combination of shapes that flow from one to the other.
   c. Something that involves actual creativity in its creation and output will receive 15 points.
   d. The three most creative solutions will receive bonus points:
      i. Most creative: +5 points
      ii. Second: +4 points
      iii. Third: +3 points

   Provide 3 things in the hand-in section for your drawing:
   a. yaml file(s) you created to make your drawing
   b. still image/screenshot of your complete drawing
   c. video of your robot doing the drawing.

Warning: If I run your code and it doesn't actually produce your drawing, you will receive 0 points for this lab. Do not fret, I will reach out to you to make sure it's not something on my end and give you an opportunity to prove it before I enact this penalty.

S-500™

FANUC Robotics

Basic Description

Six-axis, modular construction, electric servo-driven robot designed for a variety of manufacturing and system processes. The FANUC S-500 robot is engineered for precision, high-speed operation, user-friendly setup and maximum reliability supported by our extensive service and parts network.

S-500, the Solution for:

- Dispensing
- Material handling
- Material removal
- Machine load/unload
- Welding
- Waterjet cutting
- Parts transfer

Benefits

- Large work envelope and payload allow robot operation in a wide range of manufacturing processes
- Can operate in environments ranging from harsh to traditional factory floor
- No robot modifications for upright, inverted and wall mounting
- Absolute serial encoder positioning
- Slender arm design improves robot repeatability

Features

- 6 axes of motion
- 15kg (33 lbs) load capacity

- ± 0.25mm (± 0.010") repeatability
- Axes speed up to 320° per second

Reliability Features

- Grease fittings on all lubrication points for quick and easy maintenance
- RV speed reducers provide smooth motion at all speeds
- Sealed bearings and drives provide protection and improve reliability
- Interfaces with most types of servo-driven or indexing positioners
- Hollow joint construction encloses all cable routing to eliminate snagging
- Brushless AC servo motors minimize motor maintenance
- Maximum speed and torque drive motors

Options

- Axis 6 speed up to 600° per second
- 3.5" floppy disk drive for off-line storage
- Program/data printer
- RS-232-C communication port
- Integrated auxiliary axes

S-500 Dimensions

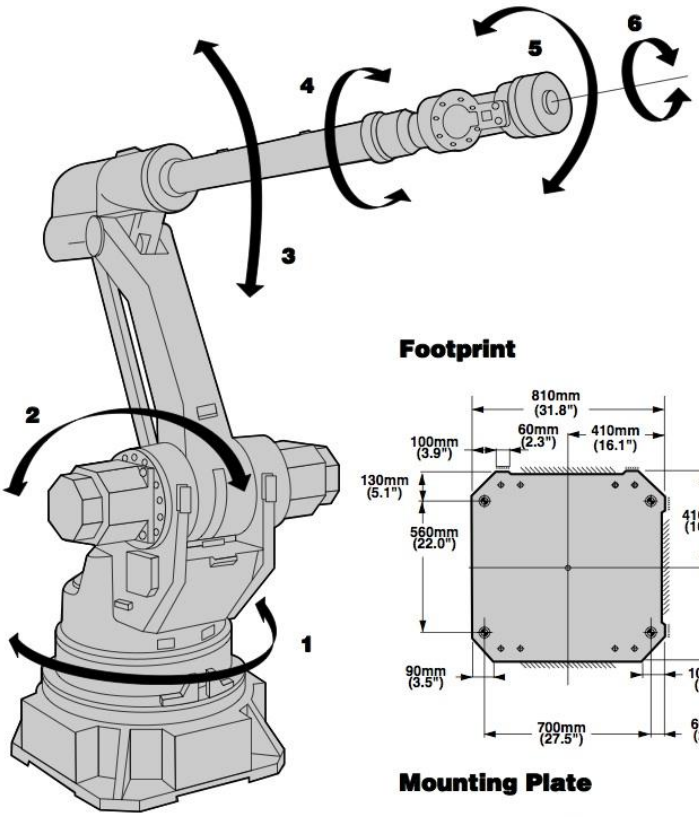

Top

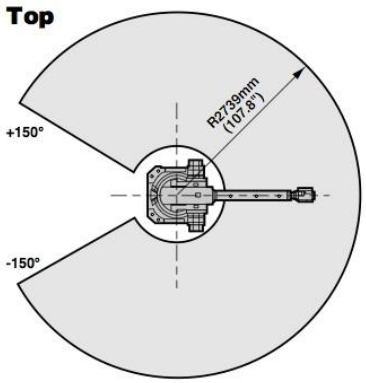

Footprint

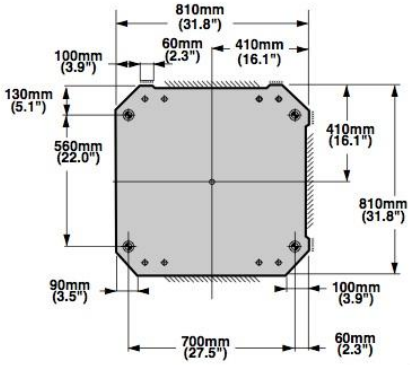

Side

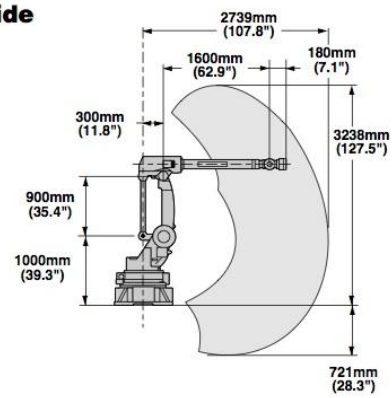

Mounting Plate

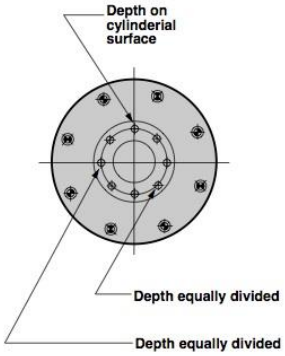

Front

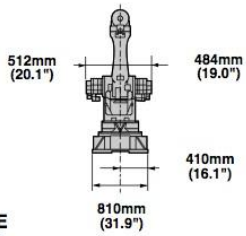

SCALE
1/100"

S-500 Specifications

Items		Range	Speed
Motion range and speed	Axis 1	300°	90°/sec.
	Axis 2	160°	90°/sec.
	Axis 3	160°	320°/sec.
	Axis 4	480°	320°/sec.
	Axis 5	240°	320°/sec.
	Axis 6	900°	320°/sec.
Moments	Axis 1	2.0 kgf • cm	
	Axis 2	3.0 kgf • cm	
	Axis 3	3.0 kgf • cm	
Load inertia	Axis 1	2.2 kgf • cm • sec^2	
	Axis 2	6.2 kgf • cm • sec^2	
	Axis 3	6.2 kgf • cm • sec^2	
Repeatability		±0.25mm(±0.010")	
Max. load capacity		15kg (33 lbs)	
Mounting method		Floor/ceiling/angle	
Mechanical brakes		All axes	
Mechanical weight		900 kg (1985 lbs)	

FANUC Robotics

FANUC Robotics North America
3900 W. Hamlin Road
Rochester Hills, MI 48309-3253
Phone (248) 377-7000
Fax (248) 377-7366

Literature Request
1-800-47-ROBOT

Cincinnati, OH
Phone (513) 771-8844

Chicago, IL
Phone (630) 876-5600

Los Angeles, CA
Phone (714) 595-2700

Charlotte, NC
Phone (704) 596-5121

Toledo, OH
Phone (419) 866-0788

Toronto, Canada
Phone (905) 670-5755

Montréal, Québec
Phone (514) 492-9001

Mexico City, Mexico
Phone (52-5) 611-5998

Sao Paulo, Brazil
Phone (55)(11) 3067-8070

©1997 FANUC Robotics North America, Inc. All rights reserved. OM 04-97 FANUC ROBOTICS LITHO IN U.S.A.