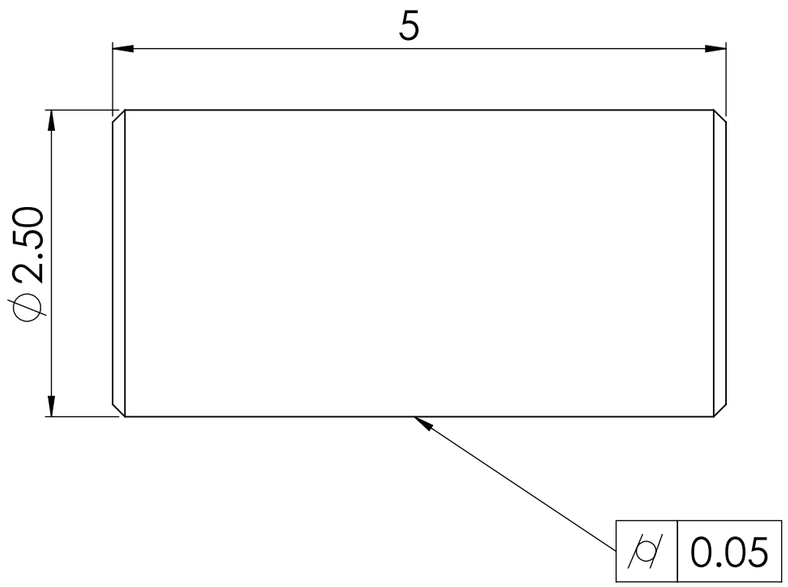

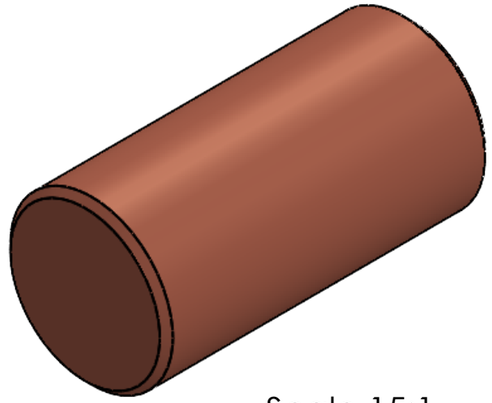

Scale 15:1

UNLESS OTHERWISE SPECIFIED: DIMENSIONS ARE IN MILLIMETERS SURFACE FINISH: TOLERANCES: LINEAR: ANGULAR:	FINISH: Polished			DEBURR AND BREAK SHARP EDGES	DO NOT SCALE DRAWING	REVISION
	NAME	SIGNATURE	DATE		TITLE:	
DRAWN						
CHK'D						
APPV'D						
MFG						
Q.A				MATERIAL: Copper	DWG NO. Piston Stud	A3
				WEIGHT: 0.002 kg	SCALE:20:1	SHEET 1 OF 1

SOLIDWORKS Educational Product. For Instructional Use Only.