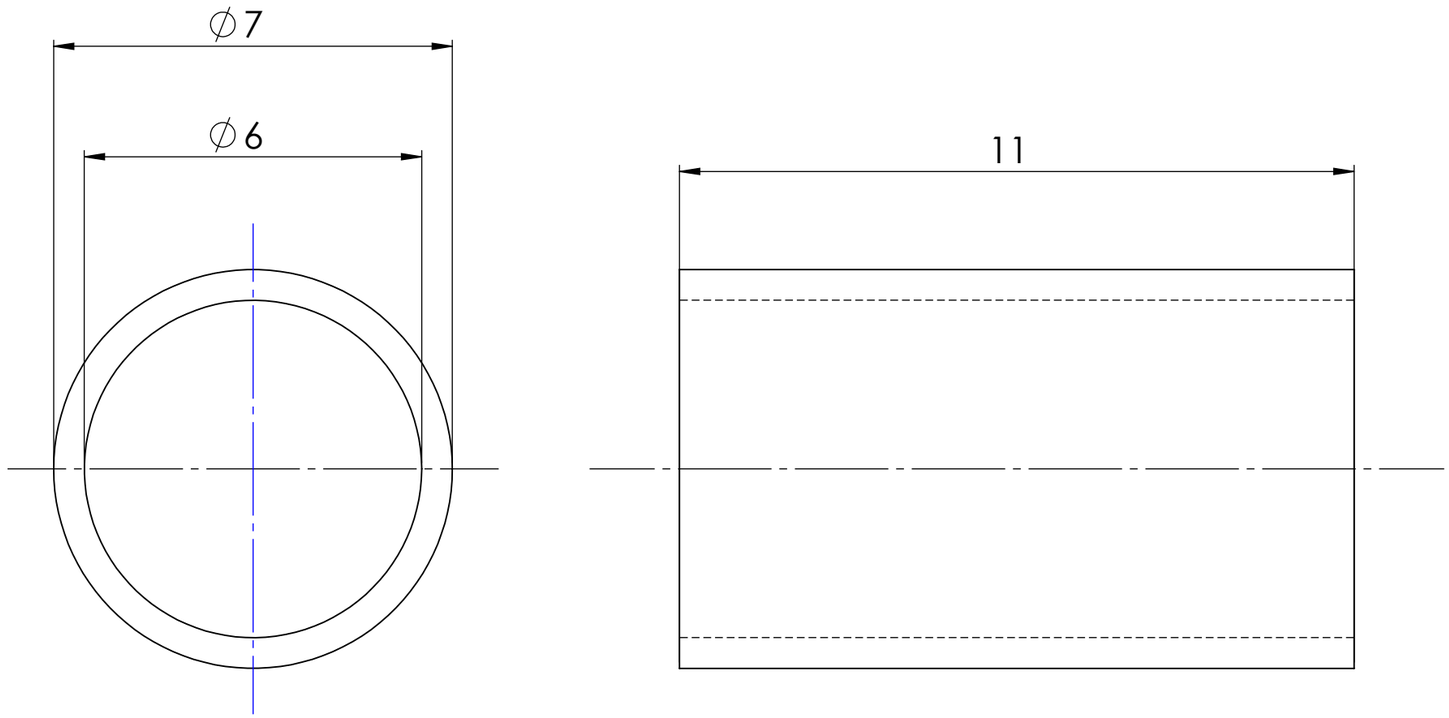

UNLESS OTHERWISE SPECIFIED: DIMENSIONS ARE IN MILLIMETERS SURFACE FINISH: TOLERANCES: LINEAR: ANGULAR:	FINISH: Coated				DEBURR AND BREAK SHARP EDGES	DO NOT SCALE DRAWING	REVISION
	NAME	SIGNATURE	DATE				TITLE:
DRAWN							
CHK'D							
APPV'D							
MFG							
Q.A				MATERIAL: Rubber		DWG NO. Tube	A3
				WEIGHT: 0.0003 kg		SCALE:5:1	SHEET 1 OF 1

SOLIDWORKS Educational Product. For Instructional Use Only.