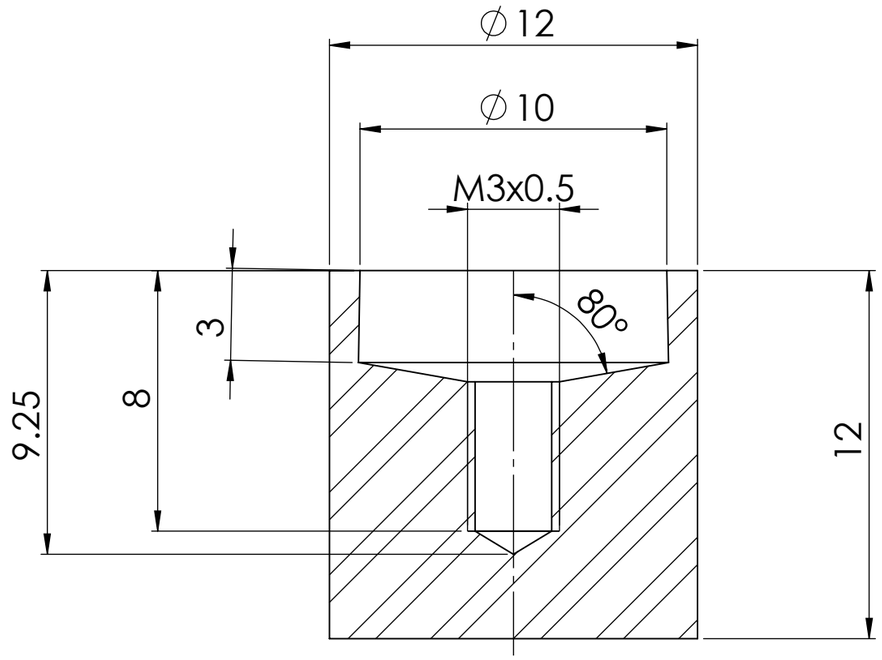


SECTION A-A

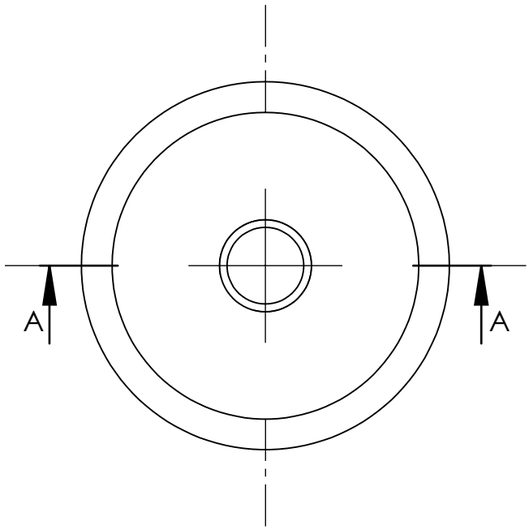


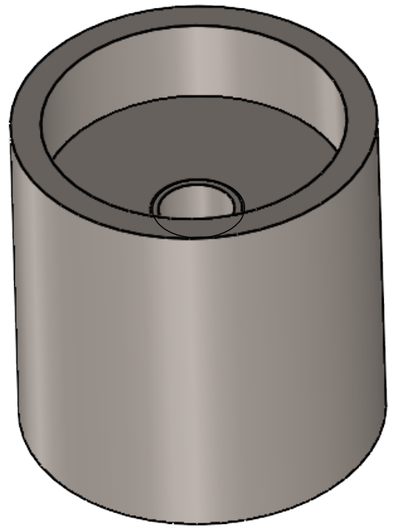

Scale 5:1

| | | | | | | |
|---|---|---|---|---|---|---|
| UNLESS OTHERWISE SPECIFIED:<br>DIMENSIONS ARE IN MILLIMETERS<br>SURFACE FINISH:<br>TOLERANCES:<br>LINEAR:<br>ANGULAR: | FINISH: Annealed | | | | DEBURR AND BREAK SHARP EDGES | DO NOT SCALE DRAWING / REVISION |
| | NAME | SIGNATURE | DATE | | | TITLE: |
| DRAWN | | | | | | |
| CHK'D | | | | | | |
| APPV'D | | | | | | |
| MFG | | | | | | |
| Q.A | | | | MATERIAL: Stainless Steel | | DWG NO. Transfer Piston A3 |
| | | | | WEIGHT: 0.008 kg | | SCALE:5:1 / SHEET 1 OF 1 |

SOLIDWORKS Educational Product. For Instructional Use Only.