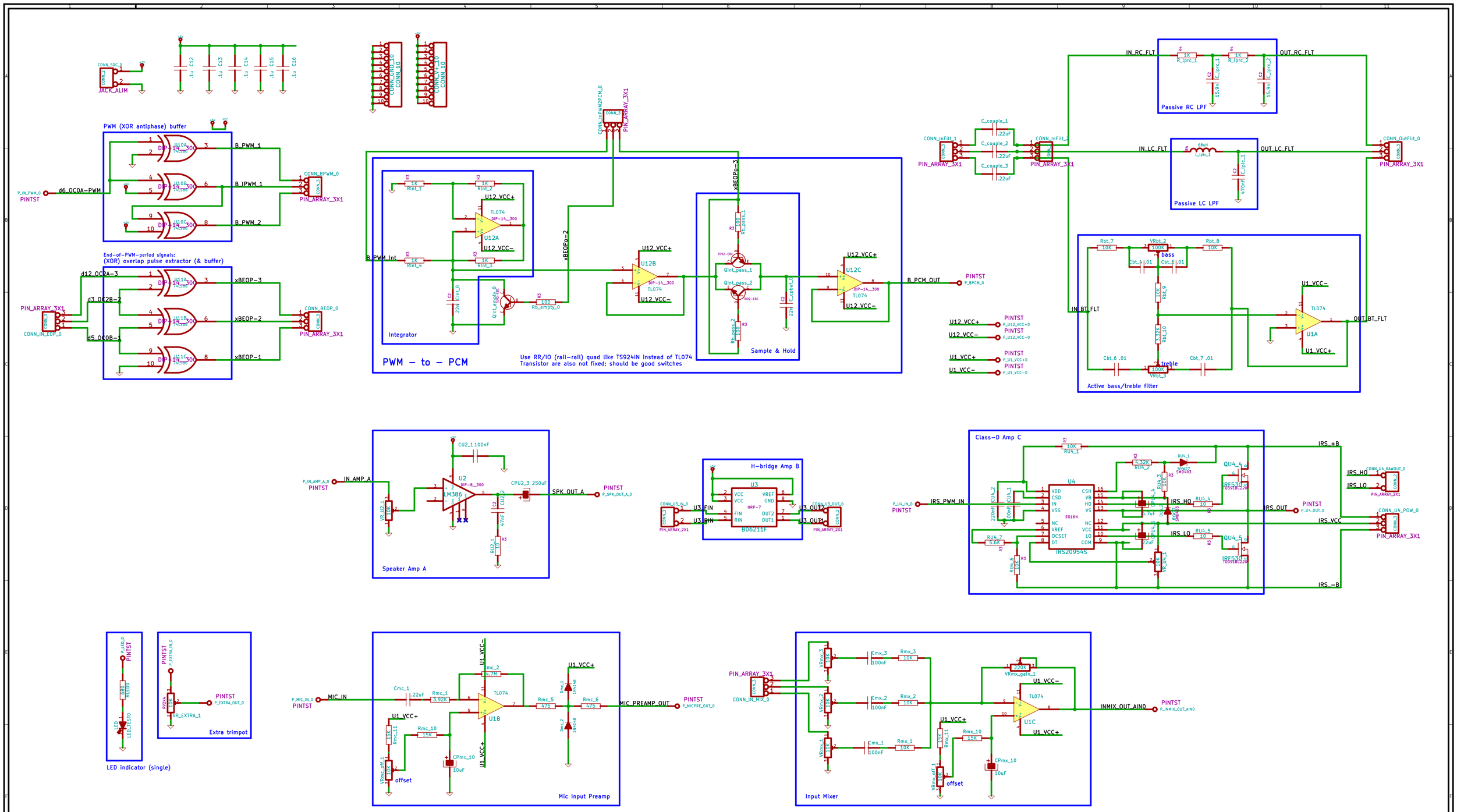

Released under the Creative Commons Attribution-Share Alike 3.0 License
http://creativecommons.org/licenses/by-sa/3.0/

sdaau

File: audard_analogbrd.sch
Sheet: /

Title: AudioArduino – Analog IO board

Size: A2	**Date: 10 dec 2010**	**Rev: 1.0**
KiCad E.D.A.		Id: 1/1