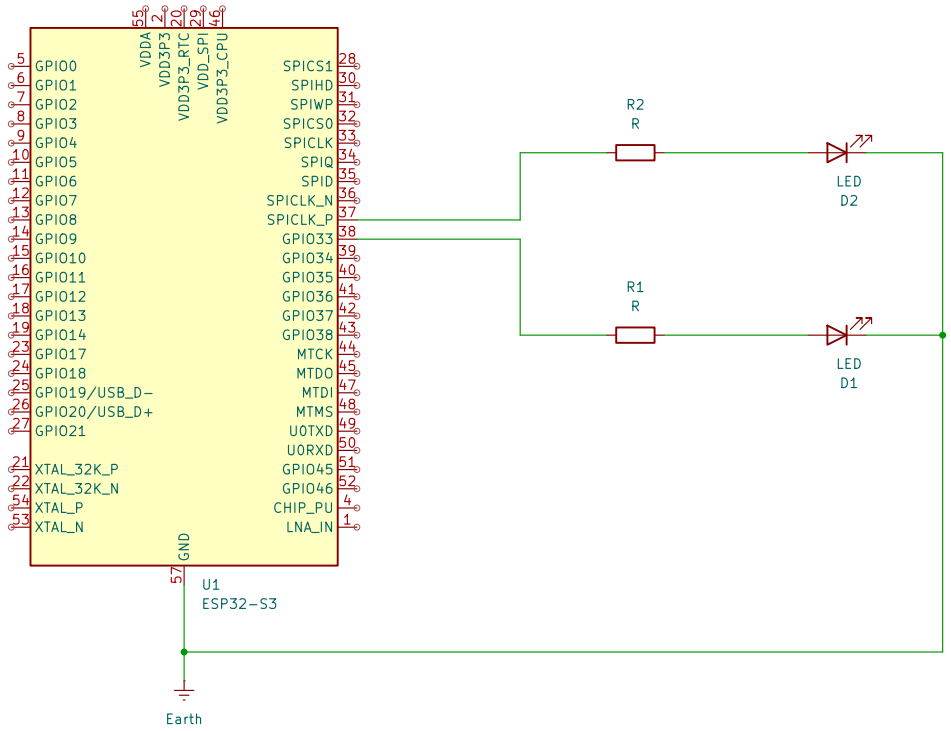

Aluno: Igor Kádson de Souza Oliveira

Sheet: /
File: embedded-systems-projects.kicad_sch

Title:

Size: A4	Date:	**Rev:**
KiCad E.D.A. 8.0.9		Id: 1/1