Software Testing and Validation

A.A. 2023/2024

Corso di Laurea in Informatica

Kriepke Structures and Murphi Verification Algorithm(s)

Igor Melatti

Università degli Studi dell'Aquila

Dipartimento di Ingegneria e Scienze dell'Informazione e Matematica

Kripke Structures

- Let AP be a set of "atomic propositions"
  - in the sense of first-order logic: each atomic proposition is either true or false
  - tipically identified with lower case letters $p, q, \ldots$
- A *Kripke Structure* (KS) over AP is a 4-tuple $\langle S, I, R, L \rangle$
  - S is a finite set, its elements are called *states*
  - $I \subseteq S$ is a set of *initial states*
  - $R \subseteq S \times S$ is a *transition relation*
  - $L : S \to 2^{AP}$ is a *labeling function*

Labeled Transition Systems

- A *Labeled Transition System* (LTS) is a 4-tuple $\langle S, I, \Lambda, \delta \rangle$
  - S is a finite set of states as before
  - $I \subseteq S$ is a set of initial states as before (not always included)
  - Λ is a finite set of *labels*
  - $\delta \subseteq S \times \Lambda \times S$ is a *labeled transition relation*

Peterson's Mutual Exclusion as a Kripke Structure

- $S = \{(p_1, p_2, q_1, q_2, t) \mid p_1, p_2 \in \{\mathrm{L0}, \mathrm{L1}, \mathrm{L2}, \mathrm{L3}, \mathrm{L4}\}, q_1, q_2 \in \{0, 1\}, t \in \{1, 2\}\} = \{\mathrm{L0}, \mathrm{L1}, \mathrm{L2}, \mathrm{L3}, \mathrm{L4}\}^2 \times \{0, 1\}^2 \times \{1, 2\}$
- $I = \{\mathrm{L0}\}^2 \times \{0\}^2 \times \{1, 2\}$
- R: see next slide
- $AP = \{(\mathtt{P}_1 = v) \mid v \in \{\mathrm{L0}, \mathrm{L1}, \mathrm{L2}, \mathrm{L3}, \mathrm{L4}\}\} \cup \{(\mathtt{P}_2 = v) \mid v \in \{\mathrm{L0}, \mathrm{L1}, \mathrm{L2}, \mathrm{L3}, \mathrm{L4}\}\} \cup \{(\mathtt{Q}_1 = v) \mid v \in \{0, 1\}\} \cup \{(\mathtt{Q}_2 = v) \mid v \in \{0, 1\}\} \cup \{(\mathtt{turn} = v) \mid v \in \{1, 2\}\}$
  - e.g.: $L(\mathrm{L0}, \mathrm{L0}, 0, 0, 1)) = \{(\mathtt{P}_1 = \mathrm{L0}), (\mathtt{P}_2 = \mathrm{L0}), (\mathtt{Q}_1 = 0), (\mathtt{Q}_2 = 0), (\mathtt{turn} = 1)\}

Peterson's Mutual Exclusion as a Kripke Structure

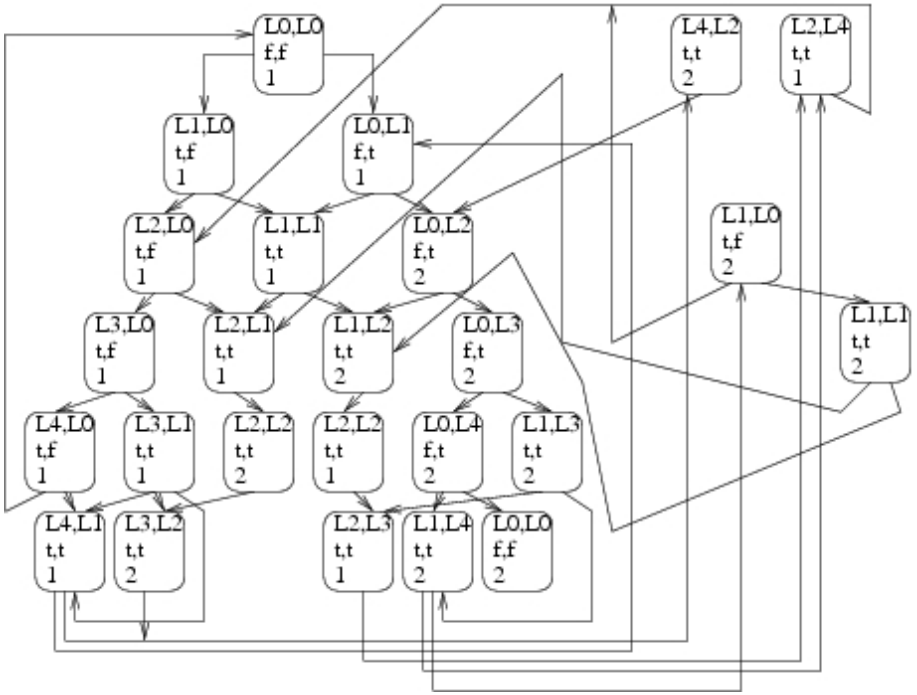

E.g.: $((\mathrm{L0}, \mathrm{L0}, 0, 0, 1), (\mathrm{L1}, \mathrm{L0}, 1, 0, 1)) \in R$, whilst
$((\mathrm{L0}, \mathrm{L0}, 0, 0, 1), (\mathrm{L2}, \mathrm{L0}, 0, 0, 1)) \notin R$

Transitions in R corresponds to arrows in the figure above

Kripke Structure vs Labeled Transition Systems

- KSs have atomic propositions on states, LTSs have labels on transitions
- In model checking, atomic propositions are mandatory
  - to specify the formula to be verified, as we will see
  - a first example was the invariant in Murphi
- Instead, it is not required to have a label on transitions
  - Murphi allows to do so, but it is optional
  - may be easily added automatically, if needed
- Labels are typically needed when:
  - we deal with macrostates, as in UML state diagrams
  - when we are describing a complex system by specifying its sub-components, so labels are used for synchronization

Total Transition Relation

- In many cases, the transition relation R is required to be *total*
- $\forall s \in S. \exists s' \in S : (s, s') \in R$
  - this of course allows also $s = s'$ (*self loop*)
- In the Peterson's example, the relation is actually total
  - Murphi allows also non-total relations, by using option `-ndl`
  - note however that not giving option `-ndl` is stronger: $\forall s \in S. \exists s' \in S : s \neq s' \wedge (s, s') \in R$
  - otherwise, if s is s.t. $\forall s'.\ s = s' \vee (s, s') \notin R$, Murphi calls s a *deadlock* state
  - that is, you cannot go anywhere, except possibly self looping on s
- By deleting any rule, we will obtain a non-total transition relation

Non-Determinism

- The transition relation is, as the name suggests, a relation
- Thus, starting from a given state, it is possible to go to many different states
  - in a deterministic system,
    $\forall s_1, s_2, s_3 \in S.\ (s_1, s_2) \in R \wedge (s_1, s_3) \in R \rightarrow s_2 = s_3$
  - this does not hold for KSs
- This means that, starting from state s_1, the system may *non-deterministically* go either to s_2 or to s_3
  - or many other states
- Motivations for non-determinism: modeling choices!
  - underspecified subsystems
  - unpredictable interleaving
  - interactions with an uncontrollable environment
  - ...

Some Useful Notation

- Given a KS $\mathcal{S} = \langle S, I, R, L \rangle$, we can define:
  - the *predecessor* function $\mathrm{Pre}_{\mathcal{S}} : S \to 2^S$
    - defined as $\mathrm{Pre}_{\mathcal{S}}(s) = \{s' \in S \mid (s', s) \in R\}$
    - we will write simply $\mathrm{Pre}(s)$ when $\mathcal{S}$ is understood
  - the *successor* function $\mathrm{Post} : S \to 2^S$
    - defined as $\mathrm{Post}(s) = \{s' \in S \mid (s, s') \in R\}$
- Note that, if $\mathcal{S}$ is deterministic, $\forall s \in S.\ |\mathrm{Post}(s)| \leq 1$

Paths in KSs

- A path (or *execution*) on a KS $\mathcal{S} = \langle S, I, R, L \rangle$ is a sequence $\pi = s_0 s_1 s_2 \ldots$ such that:
  - $\forall i \geq 0.\ s_i \in S$ (it is composed by states)
  - $\forall i \geq 0.\ (s_i, s_{i+1}) \in R$ (it only uses valid transitions)
- We will denote i-th state of a path as $\pi(i) = s_i$
- Note that paths in LTSs also have actions: $\pi = s_0 a_0 s_1 a_1 \ldots$ s.t. $(s_i, a_i, s_{i+1} \in \delta)$

Paths in KSs

- The *length* of a path π is the number of states in π
  - paths can be either finite $\pi = s_0 s_1 \ldots s_n$, in which case $|\pi| = n + 1$
  - or infinite $\pi = s_0 s_1 \ldots$, in which case $|\pi| = \infty$
- We will denote the prefix of a path up to i as $\pi|_i = s_0 \ldots s_i$
  - a prefix of a path is always a finite path
- A path π is *maximal* iff one of the following holds
  - $|\pi| = \infty$
  - $|\pi| = n + 1$ and $|\mathrm{Post}(\pi(n))| = 0$
    - that is, $\forall s \in S.\ (\pi(n), s) \notin R$
    - i.e., the last state of the path has no successors
    - often called *terminal state*
- If R is total, maximal paths are always infinite
  - for many model checking algorithms, this is required

Reachability

- The set of paths of $\mathcal{S}$ starting from $s \in S$ is denoted by $\mathrm{Path}(\mathcal{S}, s) = \{\pi \mid \pi \text{ is a path in } \mathcal{S} \wedge \pi(0) = s\}$
- The set of paths of $\mathcal{S}$ is denoted by $\mathrm{Path}(\mathcal{S}) = \cup_{s \in I} \mathrm{Path}(\mathcal{S}, s)$
  - that is, they must start from an initial state
- A state $s \in S$ is *reachable* iff $\exists \pi \in \mathrm{Path}(\mathcal{S}), k < |\pi| : \ \pi(k) = s$
  - i.e., there exists a path from an initial state leading to s through valid transitions
- The set of reachable states is defined by $\mathrm{Reach}(\mathcal{S}) = \{\pi(i) \mid \pi \in \mathrm{Path}(\mathcal{S}), i < |\pi|\}$

Safety Property Verification

- Verification of *invariants*: nothing bad happens
- The property is a formula $\varphi : S \to \{0, 1\}$
  - built using boolean combinations of atomic propositions in $p \in AP$
  - i.e., the syntax is

$$\Phi ::= (\Phi) \mid \Phi \wedge \Phi \mid \Phi \vee \Phi \mid \neg\Phi \mid p$$

- The KS $\mathcal{S}$ satisfies φ iff φ holds on all reachable states
  - $\forall s \in \mathrm{Reach}(\mathcal{S}).\ \varphi(s) = 1$
- Note that it may happen that $\varphi(s) = 0$ for some $s \in S$: never mind, if $s \notin \mathrm{Reach}(\mathcal{S})$

From Murphi Description $\mathcal{M}$ to KS $\mathcal{S}$

- First, we mathematically define a Murphi description $\mathcal{M}$
- $V = \langle v_1, \ldots, v_n \rangle$ is the set of global variables of $\mathcal{M}$, with domains $\langle D_1, \ldots, D_n \rangle$
  - all variables are *unfolded* to the Murphi simple types
    - integer subranges
    - enumerations
    - the special "undefined" value should be added to all simple types
  - that is, if a variable is an array with q elements, then it is actually to be considered as q different variables
  - the same for records (and any nesting of arrays and records)
  - as an example: `var a : array [1..n] of record begin b : 1..m; c: 1..k; endrecord`
  - then there will be $2n$ variables as follows: $a1b, \ldots, anb, a1c, \ldots, anc$
  - the first n with type `1..m`, the other with type `1..k`

UNIVERSITÀ DEGLI STUDI DELL'AQUILA
DISIM Dipartimento di Ingegneria e Scienze dell'Informazione e Matematica

From Murphi Description $\mathcal{M}$ to KS $\mathcal{S}$

- $\mathcal{I} = \{I_1, \ldots, I_k\}$ is the set of `startstate` sections in $\mathcal{M}$
  - startstates may be defined inside rulesets; again, all rulesets are *unfolded*
  - thus, if a startstate $\mathcal{I}$ is inside m nested rulesets $\mathcal{R}_1, \ldots, \mathcal{R}_m$...
  - and each ruleset $\mathcal{R}_i$ is defined on an index j_i spanning on a domain $\mathcal{D}_i$ (note that $\mathcal{D}_i$ must be a simple type)...
  - then there actually are $\prod_{l=1}^{m} |\mathcal{D}_l|$ startstates to be considered, instead of just one
  - of course, in each of these startstates definitions, the tuple $j_1, \ldots, j_m$ takes all possible values of $\mathcal{R}_1 \times \ldots \times \mathcal{R}_m$
- $T = \{T_1, \ldots, T_p\}$ is the set of `rule` sections in $\mathcal{M}$
  - again, if rulesets are present, they are *unfolded*

From Murphi Description $\mathcal{M}$ to KS $\mathcal{S}$

- The Kriepke structure $\mathcal{S} = \langle S, I, R, L \rangle$ described by $\mathcal{M}$ is such that:
  - $S = D_1 \times \ldots \times D_n$
  - $s \in I$ iff there is a startstate $I_i \in \mathcal{I}$ s.t. s may be obtained by applying the body of I_i
  - $(s, t) \in R$ iff there is a rule $T_i \in T$ s.t. T_i guard is true in s and T_i body changes s to t
  - $AP = \{(v = d) \mid v = v_i \in V \wedge d \in D_i\}$
  - $(v = d) \in L(s)$ iff variable v has value d in s

From Murphi Description $\mathcal{M}$ to KS $\mathcal{S}$

- We also assume to have a function defining the semantics of Murphi (sequence of) statements
  - those in bodies of rules and startstates
- Let $\mathcal{P}$ be the set of all possible (syntactically legal) Murphi statements
  - including `while`, `if`, `for`, assignments...
- Thus, let $\eta : \mathcal{P} \times D_1 \times \ldots \times D_n \rightarrow D_1 \times \ldots \times D_n$ be our evaluation function
  - it takes a Murphi statement $P \in \mathcal{P}$ and the state s preceding such statement
  - it returns the new state s' obtained by executing P on s
  - e.g., $\eta(\mathtt{a} := \mathtt{a} + 1; \mathtt{b} := \mathtt{b} - 1, (1, 2, 3)) = (2, 1, 3)$
  - η may be defined, e.g., using operational semantics

From Murphi Description $\mathcal{M}$ to KS $\mathcal{S}$

- We also assume to have a function defining the semantics of Murphi boolean expression
  - those in guards of rules
  - and in invariants!
- Let $\mathcal{Q}$ be the set of all possible (syntactically legal) Murphi boolean expressions
  - including `forall`, `exists`, equality checks...
- Thus, let $\zeta : \mathcal{Q} \times D_1 \times \ldots \times D_n \rightarrow \{0, 1\}$ be our evaluation function
  - it takes a Murphi boolean expression $Q \in \mathcal{Q}$ and the state s to be evaluated
  - it returns 1 iff Q is true in s
  - e.g., $\zeta((\mathrm{a} = 3 | \mathrm{b} = 4), (1, 4, 3)) = 1$
  - ζ may be defined using atomic propositions in AP (see below)

From Murphi Description $\mathcal{M}$ to KS $\mathcal{S}$

- Let $Q \in \mathcal{Q}$ be a Murphi boolean expression
- Flatten Q w.r.t. `Forall` and `Exists`
  - `Forall` is replaced by ANDs, `Exists` by ORs
  - e.g., from `Exists i1: pid Do Exists i2: pid Do (i1 != i2 & P[i1] = L3 & P[i2] = L3) End End` ...
  - ... to `(1 != 1 & P[1] = L3 & P[1] = L3) | (2 != 1 & P[2] = L3 & P[1] = L3) | (1 != 2 & P[1] = L3 & P[2] = L3) | (2 != 2 & P[2] = L3 & P[2] = L3)`
- If we replace each variable $v_i \in V$ occurring in Q with a value $w_{j_i} \in D_i$, we obtain a boolean value (true or false)
  - e.g., the former evaluates to true by setting `P[1] = L3` and `P[2] = L3`
- Thus, $\zeta(Q, s) = 1$ iff $Q(w_{j_1}, \ldots, w_{j_n}) = 1$
  - where each w_{j_i} is such that $(v_i = w_{j_i}) \in L(s)$
  - $Q(w_{j_1}, \ldots, w_{j_n})$ is the result of replacing variable v_i with value w_{j_i}

From Murphi Description $\mathcal{M}$ to KS $\mathcal{S}$

- $(s, t) \in R$ iff there is a rule $T_i \in T$ s.t. T_i guard is true in s and T_i body changes s to t
- By using η and ζ, we can be more precise:
  - "T_i guard is true" means $\zeta(G(T_i), s) = 1$, being $G(T_i)$ the Murphi expression used as guard of rule T_i
  - "T_i body changes s to t" means $\eta(B(T_i), s) = t$, being $B(T_i)$ the Murphi statement used as body of rule T_i
- $s \in I$ iff there is a startstate $I_i \in \mathcal{I}$ s.t. s may be obtained by applying the body of I_i
  - "s may be obtained by applying the body of I_i" means $\eta(B(I_i), (\perp, \ldots, \perp)) = s$, being $B(T_i)$ the Murphi statement used as body of startstate I_i

From Murphi Description $\mathcal{M}$ to KS $\mathcal{S}$

- $(s, t) \in R$ iff there is a rule $T_i \in T$ s.t. T_i guard is true in s and T_i body changes s to t:
  - that is: in the body of T_i, variables starting values are those of s
  - note that there may be two or more rules defining the same transition from s to t; no problem with this
  - simply, the same transition is described by multiple rules
- A state s is a deadlock state for two possible reasons:
  1. $(s, t) \notin R$ for all $t \in S$, i.e., the values for the variables in s do not satisfy any ruleset guard
  2. $(s, t) \in R \rightarrow t = s$, i.e., there is some ruleset guard which is satisfied by s, but its body do not change any of the global variables (e.g., the body is empty)

How to Verify a Murphi Description $\mathcal{M}$

- Theoretically, extract KS $\mathcal{S}$ and property φ from $\mathcal{M}$ as described above
  - for a given invariant I in $\mathcal{M}$, $\varphi(s) = \zeta(I, s)$ for all $s \in S$
- Then, KS $\mathcal{S}$ satisfies φ iff φ holds on all reachable states
  - $\forall s \in \mathrm{Reach}(\mathcal{S}).\ \varphi(s) = 1$
- Thus, consider KS as a graph and perform a visit
  - states are nodes, transitions are edges
- If a state e s.t. $\varphi(e) = 0$ is found, then we have an error
- Otherwise, all is ok

How to Verify a Murphi Description $\mathcal{M}$

- From a practical point of view, many optimization may be done, but let us stick to the previous scheme
- The worst case time complexity for a DFS or a BFS is $O(|V| + |E|)$ (and same for space complexity)
- For KSs, this means $O(|S| + |R|)$, thus it is linear in the size of the KS
- Is this good? NO! Because of the *state space explosion problem*
- Assuming that B bits are needed to encode each state
  - i.e., $B = \sum_{i=1}^{n} b_i$, being b_i the number of bits to encode domain D_i
- We have that $|S| = O(2^B)$

State Space Explosion

- The "practical" input dimension is B, rather than $|S|$ or $|R|$
- Typically, for a system with N components, we have $O(N)$ variables, thus $O(B)$ encoding bits
- It is very common to verify a system with N components, and then (if N is ok) also for $N + 1$ components
  - verifying a system with a generic number N of components is a proof checker task...
- This entails an esponential increase in the size of $|S|$
- Thus we need "clever" versions of BFS/DFS

Standard BFS: No Good for Model Checking

- Assumes that all graph nodes are in RAM
- For KSs, graph nodes are states, and we know there are too many
  - state space explosion
- You also need a full representation of the graph, thus also edges must be in RAM
  - using adjacency matrices or lists does not change much
  - for real-world systems, you may easily need TB of RAM
- Even if you have all the needed RAM, there is a huge preprocessing time needed to build the graph from the Murphi specification
- Then, also BFS itself may take a long time

Murphi BFS

- We need a definition inbetween the model and the KS: NFSS (Nondeterministic Finite State System)
- $\mathcal{N} = \langle S, I, \mathrm{Post} \rangle$, plus the invariant φ
  - S is the set of states, $I \subseteq S$ the set of initial states
  - $\mathrm{Post} : S \to 2^S$ is the successor function as defined before
    - given a state s, it returns T s.t. $t \in T \to (s, t) \in R$
  - no labeling, we already have φ

Murphi BFS

- KSs and NFSSs differ on having Post instead of R
- Post may easily be defined from the Murphi specification
- Such definition is implicit, as programming code, thus avoiding to store adjacency matrices or lists
  - $t \in \mathrm{Post}(s)$ iff there is a rule $T_i \in T$ s.t. T_i guard is true in s and T_i body changes s to t
    - see above for using η and ζ
  - Essentially, if the current state is s, it is sufficient to inspect all (flattened) rules in the Murphi specification $\mathcal{M}$
    - for all guards which are enabled in s, execute the body so as to obtain t, and add t to $\mathrm{next}(s)$
  - This is done "on the fly", only for those states s which must be explored

Murphi Simulation

```
void Make_a_run(NFSS 𝒩, invariant φ)
{
 let 𝒩 = ⟨S, I, Post⟩;
 s_curr = pick_a_state(I);
 if (!φ(s_curr))
  return with error message;
 while (1) { /* loop forever */
  s_next = pick_a_state(Post(s_curr));
  if (!φ(s_next))
   return with error message;
  s_curr = s_next;
 }
}
```

Murphi Simulation

```
void Make_a_run(NFSS 𝒩, invariant φ)
{
 let 𝒩 = ⟨S, I, Post⟩;
 s_curr = pick_a_state(I);
 if (!φ(s_curr))
  return with error message;
 while (1) { /* loop forever */
  if (Post(s_curr) = ∅)
   return with deadlock message;
  s_next = pick_a_state(Post(s_curr));
  if (!φ(s_next))
   return with error message;
  s_curr = s_next;
 }
}
```

UNIVERSITÀ DEGLI STUDI DELL'AQUILA

DISIM Dipartimento di Ingegneria e Scienze dell'Informazione e Matematica

Murphi Simulation

- Similar to testing
- If an error is found, the system is bugged
  - or the model is not faithful
  - actually, Murphi simulation is used to understand if the model itself contains errors
- If an error is not found, we cannot conclude anything
- The error state may lurk somewhere, out of reach for the random choice in `pick_a_state`

Standard BFS (Cormen-Leiserson-Rivest)

```
BFS(G, s)
for ogni vertice u ∈ V[G] − {s}
    do  color[u] ← WHITE
        d[u] ← ∞
        π[u] ← NIL
color[s] ← GRAY
d[s] ← 0
π[s] ← NIL
Q ← {s}
while Q ≠ ∅
    do  u ← head[Q]
        for ogni v ∈ Adj[u]
            do if color[v] = WHITE
                  then  color[v] ← GRAY
                        d[v] ← d[u] + 1
                        π[v] ← u
                        ENQUEUE(Q, v)
        DEQUEUE(Q)
        color[u] ← BLACK
```

Murphi BFS

```
FIFO_Queue Q;
HashTable T;

bool BFS(NFSS 𝒩, AP φ)
{
 let 𝒩 = (S, I, Post);
 foreach s in I {
  if (!φ(s))
   return false;
 }
 foreach s in I
  Enqueue(Q, s);
 foreach s in I
  HashInsert(T, s);
```

Murphi BFS

```
 while (Q ≠ ∅) {
  s = Dequeue(Q);
  foreach s_next in Post(s) {
   if (!φ(s_next))
    return false;
   if (s_next is not in T) {
    Enqueue(Q, s_next);
    HashInsert(T, s_next);
   } /* if */ } /* foreach */ } /* while */
 return true;
}
```

Murphi BFS

- Edges are never stored in memory
- (Reachable) states are stored in memory only at the end of the visit
  - inside hashtable `T`
- This is called *on-the-fly* verification
- States are marked as visited by putting them inside an hashtable
  - rather than coloring them as gray or black
  - which needs the graph to be already in memory

State Space Explosion

- State space explosion hits in the FIFO queue `Q` and in the hashtable `T`
  - and of course in running time...
- However, `Q` is not really a problem
  - it is accessed *sequentially*
  - always in the front for extraction, always in the rear for insertion
  - can be efficiently stored using disk, much more capable of RAM
- `T` is the real problem
  - random access, not suitable for a file
  - what to do?
  - before answering, let's have a look at Murphi code

Murphi Usage

- As for all *explicit* model checker, a Murphi verification has the following steps:
  0. compile Murph source code and write a Murphi model `model.m`
  1. invoke Murphi compiler on `model.m`: this generates a file `model.cpp`
     - `mu options model.m`
     - see `mu -h` for available options
  2. invoke C++ compiler on `model.cpp`: this generates an executable file
     - `g++ -Ipath_to_include model.cpp -o model`
     - `path_to_include` is the `include` directory inside Murphi distribution
  3. invoke the executable file
     - `./model options`
     - see `./model -h` for available options

Murphi compiler

- Executable `mu` is in `src` directory of Murphi distribution
- Obtained by compiling the 25 source files in `src`
  - of course, a `Makefile` is provided for this
- Standard compiler implementation, with Flex lexical analyzer (`mu.l`) and Yacc parser (`mu.y`)
- The main function which builds `model.cpp` is `program::generate_code` in `cpp_code.cpp` (called by `main`, in `mu.cpp`)
- `program::generate_code` uses the parse tree generated by Yacc to "implement" in C++ the guards and the bodies of the rules
- The result goes in `model.cpp`: model-specific code

Organization of `model.cpp`

- Each Murphi variable `v` (local or global) corresponds to a C++ instance `mu_v` of the class `mu__int` (possibly through class generalizations)
- Class `mu__int` is used to handle variables with max value 254 (255 is used for the undefined value)
- For integer subranges with greater values, class `mu__long` is used; also `mu__byte` (equal to `mu__int`...) and `mu__boolean` exist
- If `v` is a local variable, `mu_v` directly contains the value (attribute `cvalue`, `in_world` is false)
- Otherwise, if `v` is global, `mu_v` retrieves the value from a fixed-address structure containing the current state value (`workingstate`; `in_world` is true)

Organization of model.cpp

```
class mu__int {
 enum {undef_value=0xff};
 bool in_world;          /* local iff false */
 int lb, ub;             /* bounds */
 int byteOffset;         /* in bytes */
 /* points to workingstate->bits[byteOffset]
    for global variables, to cvalue for
     local
 */
 unsigned char *valptr;
 unsigned char cvalue;
```

Organization of model.cpp

```
public:
 /* constructor, sets all attributes (the
    variable is supposed to be local by
    default, with an undefined value);
    byteOffset is computed by generate_code
 */
 mu__int(int lb, int ub, int size, char *n,
         int byteOffset);
 /* other useful functions */
 int operator= (int val) {
  if (val <= ub && val >= lb) value(val);
  else boundary_error(val);
  return val;
 }
```

UNIVERSITÀ DEGLI STUDI DELL'AQUILA

DISIM Dipartimento di Ingegneria e Scienze dell'Informazione e Matematica

Organization of model.cpp

```
  operator int() const {
   if (isundefined()) return undef_error();
   return value();
  };
  const int value() const {return *valptr;};
  int value(int val) {
   *valptr = val; return val;};
  void to_state(state *thestate) {
   /* used to make the variable global */
   in_world = TRUE;
   valptr = (unsigned char *)&(workingstate->
    bits[byteOffset]);
  };
};
```

UNIVERSITÀ DEGLI STUDI DELL'AQUILA

DISIM Dipartimento di Ingegneria e Scienze dell'Informazione e Matematica

Organization of `model.cpp`

- As for the `byteOffset` computation, `program::generate_code` simply computes the one for a variable `mu_v` mapping a Murphi variable `v` in the following way
  - Let $M_1, \ldots, M_n$ be the upper bounds of the n variables preceeding the declaration of `v`
  - Let $b(x) = \lfloor \log_2(x+1) \rfloor + 1$ be the number of bits required to represent the maximum value x (plus the undefined value)
  - Let $B(x) = 1$ if $b(x) \leq 8$, 4 otherwise (i.e. only 1-byte or 4-bytes integers may be used)
  - Then, $\texttt{byteOffset}(\texttt{mu_v}) = \sum_{i=1}^{n} B(M_i)$

Organization of `model.cpp`: `workingstate`

- Structure containing the current global state, is an instance of class `state`
- Essentially, it consists of an array of unsigned characters, named `bits`
  - so that any value of any global variable may be casted inside it
  - at a precise location, pointed to by `valptr` from `mu__int`
- Note that `workingstate` has a fixed length, that is $\texttt{BLOCKS_IN_WORLD} = \sum_{i=1}^{N} B(M_i)$
  - being N the number of all global variables
  - namely, `bits` has `BLOCKS_IN_WORLD` unsigned chars

Translation of Murphi Model Statements

- Straightforward for `ifs`, `whiles` and so on: the "difficult" part is assignments (and expressions evaluation)
- Essentially, `a := b;` in `model.m` becomes `mu_a = (mu_b);` in `model.cpp`
- The operator `()` is redefined so that `mu_b` retrieves the value for `b`, either from itself (attribute `cvalue`) or from `workingstate` (thanks to `valptr`)
- Then, the redefined operator = is called, so that `mu_a` updates the value for `a` to be equal to that of `b`, either from itself (attribute `cvalue`) or from `workingstate`
- If the right side of the assignment has a generic expression, it is evaluated in a similar way (the operator `()` solves the Murphi variable references, the other values will be integer constants or function calls...)
- BTW, functions are mapped as C++ methods...

Translation of Murphi Rules

- For each rule *i* (starting from 0 at the *end* of `model.m`!) there is a class named `RuleBase`*i*
- Such class has `Code` method for the body and `Condition` method for the guard
- Startstates are similar, but they only have the body
- A suitable C++ code flattens rulesets, if present

Translation of Murphi Rules: From This...

```
Const VAL_LIM: 5;

Type val_t : 0..VAL_LIM;

Var v : val_t;

Rule "incBy1"
 v <= VAL_LIM - 1 ==>
 Var useless : val_t;
 Begin
  useless := 1;
  v := v + useless;
 End;
```

Translation of Murphi Rules: ... To This

```
class RuleBase1 {
public:
 ⋮
 bool Condition(unsigned r) { /* guard */
  return (mu_v) <= (4);
 }
 ⋮
 void Code(unsigned r) {        /* body */
  mu_1_val_t mu_useless("useless", 0);
  mu_useless = 1;
  mu_v = (mu_v) + (mu_useless);
 };
 ⋮
}
```

UNIVERSITÀ DEGLI STUDI DELL'AQUILA

DISIM Dipartimento di Ingegneria e Scienze dell'Informazione e Matematica

Translation of Murphi Rules: From This...

```
ruleset i: l1..u1 do
 ruleset j: l2..u2 do
  Rule "incBy1"
   i < j ==>
   Begin v := v + i - j; End;
Endruleset; Endruleset;
```

Translation of Murphi Rules: ... To This

```
class RuleBase0 {
public:
 bool Condition(unsigned r) {
  /* called (u1 − l1 + 1)(u2 − l2 + 1) with r ranging
     from 0 to (u1 − l1 + 1)(u2 − l2 + 1) − 1 */
  static mu__subrange_7 mu_j;
  mu_j.value((r % (u2 − l2 + 1)) + l2);
  r = r / (u2 − l2 + 1);
  static mu__subrange_6 mu_i;
  mu_i.value((r % (u1 − l1 + 1)) + l1);
  /* useless, but it is automatically
     generated... */
  r = r / (u1 − l1 + 1);
  return (mu_i) < (mu_j);
 }
```

Translation of Murphi Rules: ... To This

```
  void Code(unsigned r) {
   static mu__subrange_7 mu_j;
   mu_j.value((r % (u2 - l2 + 1)) + l2);
   r = r / (u2 - l2 + 1);
   static mu__subrange_6 mu_i;
   mu_i.value((r % (u1 - l1 + 1)) + l1);
   r = r / (u1 - l1 + 1);
   mu_v = ((mu_v) + (mu_i)) - (mu_j);
  };
  ⋮
};
```

Murphi Overall Translation

- Note that the first part of `Condition` and `Code` is meant to translate an integer from 0 to $(u_1 - l_1 + 1)(u_2 - l_2 + 1) - 1$ in 2 values for the rulesets indeces
- The interface class for the verification algorithm is `NextStateGenerator`
- Suppose there are R rules $r_0, \ldots, r_{R-1}$, and that each r_i is contained in N_i nested rulesets having upper bound u_{ij} and lower bound l_{ij}, for $j = 1, \ldots, N_i$
- Note that `Condition` simply calls its homonymous method of the RuleBase class corresponding the current `r`...

Murphi Overall Translation

Let $P(k) = \sum_{i=0}^{k-1}(\prod_{j=1}^{N_i}(u_{ij} - l_{ij} + 1)) + 1$ be the number of flattened rules preceding the rule r_k;

```
class NextStateGenerator {
 RuleBase0 R0;
 ⋮
 RuleBase(R − 1) R(R − 1);
public:
 void SetNextEnabledRule(unsigned &
  what_rule);
```

Murphi Overall Translation

```
bool Condition(unsigned r) { /* r will
 range from 0 to P(R) */
 category = CONDITION;
 if (what_rule < P(1))
  return R0.Condition(r - 0);
 if (what_rule >= P(1) && what_rule < P(2))
  return R1.Condition(r - P(1));
 ⋮
 if (what_rule >= P(R-1) && what_rule <
  P(R))
  return R(R-1).Condition(r - P(R-1));
 return Error;
}
```

UNIVERSITÀ DEGLI STUDI DELL'AQUILA

DISIM Dipartimento di Ingegneria e Scienze dell'Informazione e Matematica

Murphi Overall Translation

```
void Code(unsigned r) {
 if (what_rule < P(1)) {
  R0.Code(r - 0); return;
 }
 if (what_rule >= P(1) && what_rule < P(2)) {
  R1.Code(r - P(1)); return;
 }
 ⋮
 if (what_rule >= P(R-1) && what_rule <
  P(R)) {
  R(R-1).Code(r - P(R-1)); return;
 } }
};
const unsigned numrules = P(R);
```

UNIVERSITÀ DEGLI STUDI DELL'AQUILA
DISIM Dipartimento di Ingegneria e Scienze dell'Informazione e Matematica

Step 2: What Is Actually Compiled by C++ Compiler

Concatenation of include/*.h
model.cpp
Concatenation of include/*.C

Murphi BFS

```
FIFO_Queue Q;
HashTable T;

bool BFS(NFSS 𝒩, AP φ)
{
 let 𝒩 = (S, I, Post);
 foreach s in I {
  if (!φ(s))
   return false;
 }
 foreach s in I
  Enqueue(Q, s);
 foreach s in I
  HashInsert(T, s);
```

Murphi BFS

```
 while (Q ≠ ∅) {
  s = Dequeue(Q);
  foreach s_next in Post(s) {
   if (!φ(s_next))
    return false;
   if (s_next is not in T) {
    Enqueue(Q, s_next);
    HashInsert(T, s_next);
   } /* if */ } /* foreach */ } /* while */
 return true;
}
```

BFS in Murphi

- `Post(s)` is computed using class `NextStateGenerator`
- It is equivalent to a `for` loop on all flattened rules
- For each flattened rule index r, `Condition(`r`)` tells if the current state `workingstate` enables the guard of r
- If so, the next state is obtained via `Code(`r`)`, by directly modifying `workingstate`

Hashtable in Murphi

- Open addressing ...
  - insert: repeatedly call $e = h(s, i)$ (for $i = 1, 2, \ldots$) till $\mathtt{T}[e] = \varnothing$, then insert s in $\mathtt{T}[e]$
  - search: repeatedly call $e = h(s, i)$ (for $i = 1, 2, \ldots$) till either:
    - $\mathtt{T}[e] = \varnothing \rightarrow s$ is not present
    - $\mathtt{T}[e] = s \rightarrow s$ is present
- ... with double hasing
  - there are two hash functions h_1, h_2
  - $h(s, i) = (h_1(s) + ih_2(s)) \bmod m$
  - m is the size of $\mathtt{T}$, and is a prime number

Reducing Hashtable in Murphi

- States must be stored in `T`
- For efficiency reasons, `T` is a fixed-length array, each entry is an instance of `state` class
  - if `T` becomes full, the verification is terminated and you have to run it again with more memory
  - option `-m` of `model` executable
- Thus, `T` stores workingstates
- Two possible ways (also together):
  1. use less memory for each state
  2. store less states

Hash Compaction

- Enabled by compiling the Murphi model with `-c`
- When dealing with hash table insertions and searches, state "signatures" are used instead of the whole states
- The idea is that it is unlikely to happen that two different states have the same signature
- If this happens, some states may be never reached, even if they are indeed reachable
- Thus, there may be "false positives": the verification terminates with an OK messages, while the system was buggy instead
- However, this is very unlikely to happen, and in every case it is much better than testing, which may miss whole classes of bugs

Hash Compaction

- At the beginning of the verification, a vector `hashmatrix` of 24*`BLOCKS_IN_WORLD` longs (4 byte per each long) is created and initialized with *random* values (`hashmatrix` will never be modified)
- Then, given a state s to be sought/inserted, 3 longs `l0`, `l1` and `l2` are computed from `hashmatrix`
- Namely, `l`i, for $i = 0, 1, 2$, is the bit-to-bit xor of the longs in the set $H(i) = \{\texttt{hashmatrix}[3k + i] \mid \text{the } k\text{-th bit of the uncompressed state } s \text{ is } 1\}$;
- That is to say, every bit of s is used to determine if a given element of `hashmatrix` has or hasn't to be used in the signature computation

Hash Compaction

- This is accomplished in the functions of file `include/mu_hash.cpp`, where to avoid to compute `8*BLOCKS_IN_WORLD` bit-to-bit xor operations, some xor properties allow to use the preceeding computed signature and save some xor computation (`oldvec` variable)
- Then, `l0` is used as a hash value (index in the hash table)
- The concatenation of `l1` and `l2` (truncated to a given number of bits by option `-b`) gives the signature (the value to be sought/inserted in `T`)
- It should be obvious, now, that a signature cannot be used to generate states, so that's why `Q` entries do not point to hash table entries any more
- Thus, if current `workingstate` state is found to be new, and so its signature is put inside the hash table, a new memory block is allocated to be assigned to the current from of the queue, and `workingstate` is copied into that

UNIVERSITÀ DEGLI STUDI L'AQUILA
DISIM Dipartimento di Ingegneria e Scienze dell'Informazione e Matematica

Bit Compression

- To save some (not much...) space, the Murphi compiler option `-b` may be used to compress states (*bit compression* in SPIN's parlance)
- Whilst hashcompaction is a lossy compression, this is lossless
- But very less efficient
- In this way, `workingstate` contents are not forced to be aligned to byte boundaries, so it occupies less space
- Moreover, effective subranges size is used (remember we store the lower bound...)
- Of course, a more complex handling than the `valptr` and `byteOffset` one has to be used

Murphi BFS

```
Var
  x : 255..261;
  y : 30..53;

StartState
  x := 256;
  y := 53;
End;
```

Bit Compression

				y
0x0	0x0	0x1	0x0	0x35

workingstate–>bits without –b

x	y
0xc	0x2

workingstate–>bits with –b

Symmetry and Multiset Reductions

- Differently from SPIN's partial order reduction, these techniques are not transparent to the user
- In fact, symmetry reduction are applicable only if some types have been declared using the `scalarset` keyword (for multiset reduction, the keyword is `multiset`)
- Not all systems are symmetric
- However, when it is possible to apply symmetry reduction, only a subset of the state space is (correctly) explored
- To be more precise, symmetry reduction induces a partition of the state space in equivalence classes
- A functions chain (implemented in the model-dependent part in `model.cpp`) is able to return the representative of the equivalence class of a given state

Symmetry and Multiset Reductions

- Rules for scalarset:
  - the values are not used in any comparison operation except equality testing
  - the values are not used in any arithmetic operation
  - the result from the for loop with the subrange as index does not depend on the order of the iteration
  - cannot be directly assigned to some value: either it is used on a forall, exists, for, ruleset, or it is used an assignment with some other scalarset value

Murphi BFS with Symmetry Reduction

```
FIFO_Queue Q;
HashTable T;

bool BFS(NFSS 𝒩, AP φ)
{
 let 𝒩 = (S, I, Post);
 foreach ss in I {
  s = Normalize(ss);
  if (!φ(s))
   return false;
 }
 foreach s in I
  Enqueue(Q, s);
 foreach s in I
  HashInsert(T, s);
```

Murphi BFS with Symmetry Reduction

```
while (Q ≠ ∅) {
 s = Dequeue(Q);
 foreach ss_next in Post(s) {
  s_next = Normalize(ss_next);
  if (!φ(s_next))
   return false;
  if (s_next is not in T) {
   Enqueue(Q, s_next);
   HashInsert(T, s_next);
  } /* if */ } /* foreach */ } /* while */
 return true;
}
```

Symmetry Reduction

- How is `Normalize` implemented? Here are the main ideas
- Suppose that variable v is a `scalarset(N)`, and $v = \tilde{v}$ in a state $s \in S$
- Then, any *permutation* of the set $\{1, \ldots, N\}$ brings to an *equivalent* state
- Thus, all possible permutations are generated, and the lexicographically smaller state is chosen as the representative
  - apply a permutation means: change the value of v, and reorder any array or ruleset or for which depends on v
- Could be expensive, heuristics are also used to perform faster but potentially not complete normalizations
  - i.e., two symmetric states may be declared different
  - this does not hinders verification correctness, only its efficiency