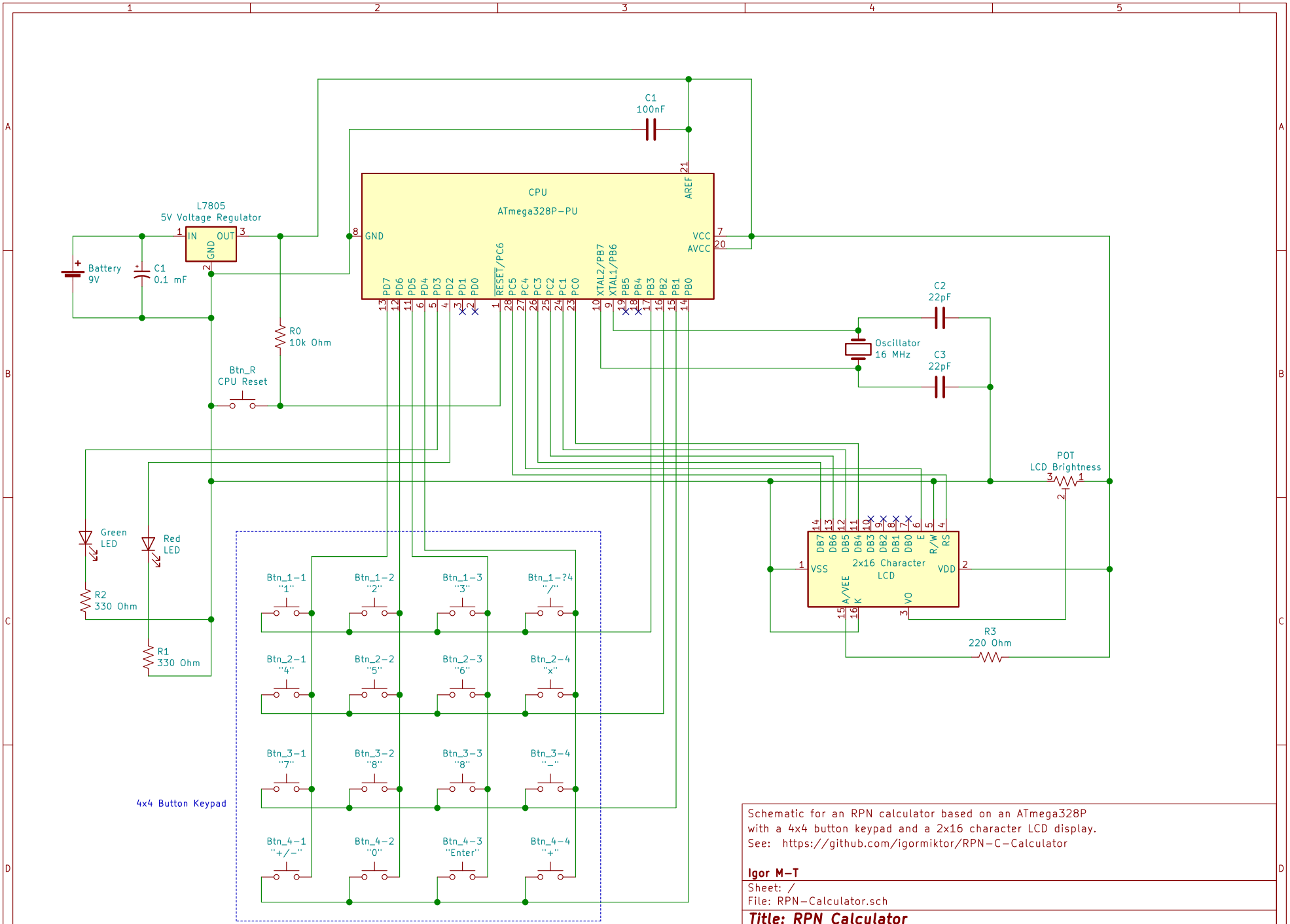

Schematic for an RPN calculator based on an ATmega328P
with a 4x4 button keypad and a 2x16 character LCD display.
See: https://github.com/igormiktor/RPN-C-Calculator

Igor M-T

Sheet: /
File: RPN-Calculator.sch

Title: RPN Calculator

Size: USLetter	Date: 2021-02-27	**Rev: 1**
KiCad E.D.A. kicad 5.1.5+dfsg1-2build2		Id: 1/1