ZEV motor-protective system Overload monitoring of motors in EEx e areas

Hardware and Engineering

10/06 AWB2300-1433GB

MOELLER

Think future. Switch to green.

All brand and product names are trademarks or registered trademarks of the owner concerned.

1st published 2001, edition date 11/01
2nd edition 10/2006
See revision protocol in the "About this manual" chapter

© Moeller GmbH, 53105 Bonn

Author: Klaus Grül
Editor: Heidrun Riege
Translator: Harold Schierbaum

All rights reserved, including those of the translation.

No part of this manual may be reproduced in any form (printed, photocopy, microfilm or any other process) or processed, duplicated or distributed by means of electronic systems without written permission of Moeller GmbH, Bonn.

Subject to alteration without notice.

Warning!
Dangerous electrical voltage!

Before commencing the installation

- Disconnect the power supply of the device.
- Ensure relosing interlock that devices cannot be accidentally restarted.
- Verify isolation from the supply.
- Connect to earth and short-circuit.
- Cover or fence off neighbouring live parts.
- Follow the installation instructions (AWA) included with the device.
- Only suitably qualified personnel in accordance with EN 50110-1/-2 (VDE 0105 Part 100) may work on this device/system.
- Before installation and before touching the device ensure that you are free of electrostatic charge.
- The rated value of the mains voltage may not fluctuate or deviate by more than the tolerance specified, otherwise malfunction and hazardous states are to be expected.
- Panel-mount devices may only be operated when properly installed in the cubicle or control cabinet.

Contents

About this manual 3
List of revisions 3
Target group 3
Abbreviations and symbols 3

1 Motor-protective system ZEV 5
Preface 5
System overview 6
Unit description 8
– Current monitoring sensors 8
– Setting of the tripping CLASS 8
– Thermistor monitoring 10
– Thermistor protection 11
– Short-circuit monitoring of the thermistor circuit 12
– Phase failure 14
– Earth fault monitoring 14

2 Configuration 15
Monitoring overload of motors in the EEx e area 15
Setup of the overcurrent protection system 15
Approvals 16

3 Installation 17
Notes on installation 17
Mounting the devices 19
– ZEV and ZEV-XSW-25 to 145 19
– ZEV and ZEV-XSW-820 21
– Connections 25
Removing devices 26
– ZEV and DIN rail 26
– Connecting cable 26

4 Operating the devices 27
Settings 27

Setting up the menus 29
– Setting the operating current 29
– Setting the tripping CLASS 29
– Selecting the reset mode 29
– Setting the earth fault monitor 30
– Assigning the free contacts 30
Display messages 31
– Overload tripping 31
– Thermistor tripping 31
– Earth fault 31
– Phase failure 32
– Current imbalance 32
– Device fault 32

Annex 33
Rating plates 33
– Electronic motor-protective relay ZEV 33
– Current sensors ZEV-XSW-... 33
ZEV tripping curves 35
– 3-phase tripping curve 35
– 2-phase tripping curve 37
Dimensions 38

About this manual

This manual applies to the motor-protective system ZEV.

It describes the overload monitoring system for the protection of motors operating in potentially explosive atmospheres (EEx e areas).

List of revisions

Edition	Page	Description	New	Modification	Omitted
10/06	33	„Rating plates“		✓	

Target group

This manual addresses skilled personnel who install, commission and service the motor-protective systems.

Abbreviations and symbols

The abbreviations and symbols used in this manual have the following meaning:

CLASS	Tripping class of a thermal overload circuit-breaker
EEx e	"Increased safety“ degree of protection
RTT	Rated threshold temperature
PTB	**P**hysikalisch **T**echnische **B**undesanstalt. German Federal Testing Laboratory: Accredited certification authority for devices operated in EEx e areas.
PTC	A PTC resistor is a temperature sensor with positive temperature coefficient

▶ indicates actions to be taken.

Draws your attention to interesting tips and supplementary information

Note
Warns of the risk of slight material damage.

Warning!
Warns of the risk of heavy material damage and of fatal injury or even death.

The chapter title in the header on the left side and the title of the current topic on the right side provide you with a good overview of this documentation. Exceptions are the starting pages of the chapters and empty pages at the end of a chapter.

1 Motor-protective system ZEV

Preface

In addition to the degree of protection specified in the standards EN 60079-14 and VDE 0165 Part 1, further provisions have been made to ensure safety from ignition for motors operated in potentially explosive atmospheres. EN 50019 prescribes additional measures to be taken for the operation motors with "increased safety" type of protection "e". These measures improve the degree of safety and prevent impermissible high temperature and development of sparking and arcing, which is usually not found when motors are operated under normal conditions. The motor protective devices used for this are operated outside of the EEx e area and must be certified by an accredited certification authority.

The guidelines on the application of Directive 94/9/EC (ATEX 100a) on the approximation of the laws of the Member States concerning equipment and protective systems intended for use in potentially explosive atmospheres will be enforced as of 06.30.2003.

The motor-protective system ZEV is approved by the PTB according the 94/9/EC (ATEX 100a) Directives.

→ Number of the EU Certificate of Compliance:
PTB 01 ATEX 3233.

System overview

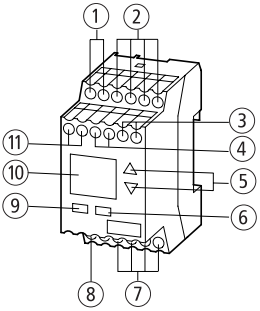

Figure 1 : Basic electronic motor-protective relay unit ZEV

1. Power supply
2. Freely configurable auxiliary switches
3. Terminals for connecting an external core-balance transformer
4. Terminals for connecting a thermistor
5. Up/Down adjusting buttons
6. Mode selector button
7. 1 NO + 1 NC contact for overload and thermistor tripping
8. Grounding terminal
9. Reset/Test button
10. Display
11. Terminal for connecting a remote or automatic reset contact

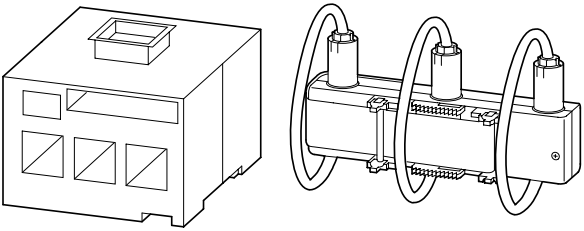

ZEV-XSW-25
ZEV-XSW-65
ZEV-XSW-145

ZEV-XSW-820

Figure 2: Current sensors

Always use patch cables of the type ZEV-XVK-... to connect current sensors. These are available in the following lengths

- 200 mm,
- 400 mm,
- 800 mm,

Figure 3: Supplementary external core-balance transformer SSW... for earth fault monitoring

Auxiliary external core-balance transformers SSW... are used for earth fault monitoring (→ section "Earth fault monitoring", Page 14).

Unit description

Current monitoring sensors

The ZEV series of electronic motor-protective relays belongs to the family of current-sensing protective devices, same as the motor-protective relays operating on a bimetallic release principle.

The ZEV monitors the motor current by means of separate sensors, which cover the current range from 1 to 820 A.

Table 1: Current sensor operating ranges

Current sensor	Current range I A
ZEV-XSW-25	1 to 25
ZEV-XSW-65	3 to 65
ZEV-XSW-145	10 to 145
ZEV-XSW-820	40 to 820

Setting of the tripping CLASS

The system is suitable for standard and heavy startup operation. The tripping characteristics are selected by means of the CLASS settings. These are:

- CLASS 5 = for easy starting conditions,
- CLASS 10 = for standard starting conditions,
- CLASS 15 to CLASS 40 = for heavy to severe starting conditions.

The switchgear is designed for standard and overload operation of the CLASS 10. To avoid thermal overload of switchgear under severe starting conditions, the rated operational current $I_{e\ CLASS}$ of the switchgear must be reduced according to the CLASS setting on the ZEV. The rated operational current $I_{e\ CLASS}$ can be calculated based on the reducing factors listed in Table 2 , Page 9.

Table 2: Settings for overload tripping

CLASS	$I_{e\ CLASS}$ =
5	I_e
10	I_e
15	$I_e \times 0.82$
20	$I_e \times 0.71$
25	$I_e \times 0.63$
30	$I_e \times 0.58$
35	$I_e \times 0.53$
40	$I_e \times 0.50$

Warning!
The protected motor and the switchgear must be suitable for the given startup conditions.

The contacts 95-96 and 97-98 are switched over in the event of an overload tripping (→ fig. 6 on Page 16).

After overload tripping and before restarting the unit, its recovery time as determined by the CLASS settings shown in Table 3 must be maintained.

Table 3: Recovery times after overload tripping

CLASS	$t_{recovery}$ min
5	5
10	6
15	7
20	8
25	9
30	10
35	11
40	12

Thermistor monitoring

The ZEV is not only suitable for direct, but also for indirect temperature monitoring by means of thermistors. For this, a thermistor is connected to input T1-T2 that is bridged by default (→ section "Thermistor protection", Page 11).

The contacts 95-96 and 97-98 change over when the thermistor monitor trips the device (→ fig. 4 on Page 11).

Thermistor protection

Full motor protection can be achieved by connecting up to six DIN 44081 and DIN 44082 PTC temperature probes with a resistance of $R_K \leqq 250\ \Omega$ to the terminals T1-T2.

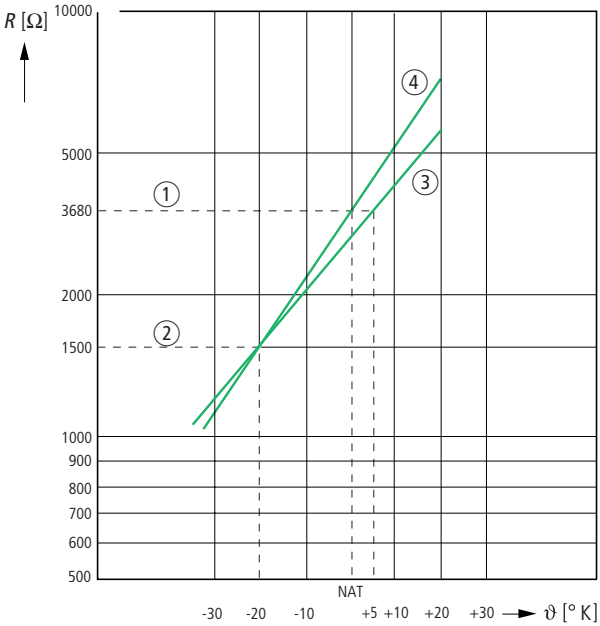

NAT = RTT = Rated Threshold Temperature

Figure 4 : Characteristics curve of temperature monitoring with thermistor

① Tripping
② Reset
③ Three temperature probes
④ Six temperature probes

The ZEV trips at $R = 3200\ \Omega \pm 15\ \%$ and resets at $R = 1500\ \Omega +10\ \%$. The contacts 9596 and 9798 change over when the unit is tripped by the signal at the thermistor input. The thermistor tripping circuit can also be assigned to switch over one of the contacts 05-06 or 07-08, in order to provide a distinguished tripping indication (→ fig. 7, Page 18).

→ Hazard due to sensor failure is also excluded when the temperature is being monitored by means of thermistors, since this circuit switches off the unit instantaneously.

Warning!
Response of the thermistor monitoring unit must also directly shut down a motor that is controlled by means of an inverter. Appropriate provisions must be made in the circuit.

Short-circuit monitoring of the thermistor circuit

A current monitor can be installed in the thermistor circuit, in order to monitor the current high limit and short-circuit as shown in the following circuit diagram.

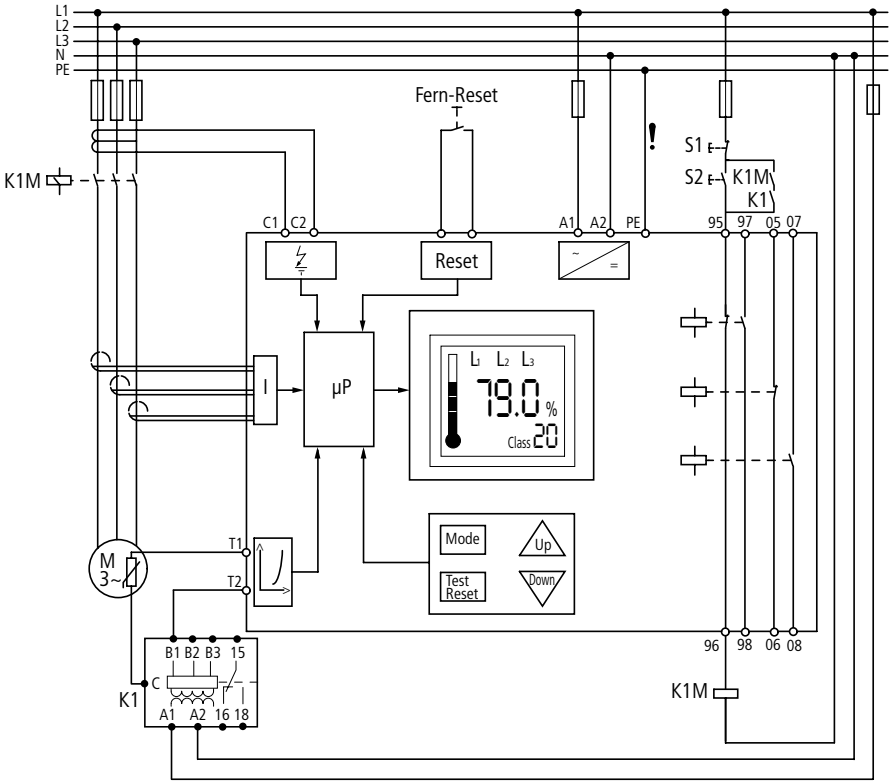

Figure 5: Functional diagram of a current monitor

Caution!
The maximum short-circuit current at the thermistor input is 2.5 mA.

This circuit is suitable for full protection of motors operated in "EEx e" areas.

Phase failure

In the event of a phase failure, i.e. with an imbalance of ≧ 50 %, the unit is tripped within a delay time of 2.5 seconds ±20 %.

Earth fault monitoring

In addition to standard motor-protective functions, such as the protection from overload or phase failure and imbalance, the device is also equipped with a thermistor input for direct temperature monitoring and with the option of monitoring earth faults via an auxiliary core-balance transformers.

Table 4: Core-balance transformers for earth fault monitoring

Core-balance transformer	Opening diameter mm	Fault current A
SSW40-0,3	40	0.3
SSW40-0,5	40	0.5
SSW40-1	40	1
SSW65-0,5	65	0.5
SSW65-1	65	1
SSW120-0,5	120	0.5
SSW120-1	120	1

Caution!
An earth fault does not lead to a changeover of the contacts 95-96 and 97-98.

In addition to the message shown on the display of the ZEV (→ fig. 30 on Page 31), the "earth fault" signal can also be used to switch over one of the contacts 05-06 or 07-08 (→ fig. 7 on Page 18).

2 Configuration

Monitoring overload of motors in the EEx e area

The "EEx e" degree of protection for motors is achieved by means of special constructive measures. The motors are assigned to temperature classes based on the maximum permitted surface temperatures. The temperature rise time t_E and the ratio between the startup current and rated current I_A/I_N are calculated in addition and specified on the rating plate of the motor.

The temperature rise time t_E represents the it takes the temperature of the motor winding to rise from the final rated operational temperature up to the limit temperature, at a startup current of I_A.

However, since EEx e motors are not intrinsically safe, explosion safety can only achieved by taking additional measures during installation and by selecting appropriate operating conditions (PTB testing regulations), e.g. by adding a correctly rated and set overload protection to the circuit.

Setup of the overcurrent protection system

Warning!
The selected overload protection system must not only ensure proper monitoring of the motor current, but also that the seized motor is switched off within the temperature rise time t_E. This means, that the protective device must be rated in such a way, so as to ensure that the tripping time t_A for the ratio I_A/I_N of the EEx e motor is not higher than its temperature rise time t_E, according to its characteristics curve, in order to safely switch off the motor within that period (→ following example).

Example: $I_A/I_N = 6$, $t_E = 18$ s

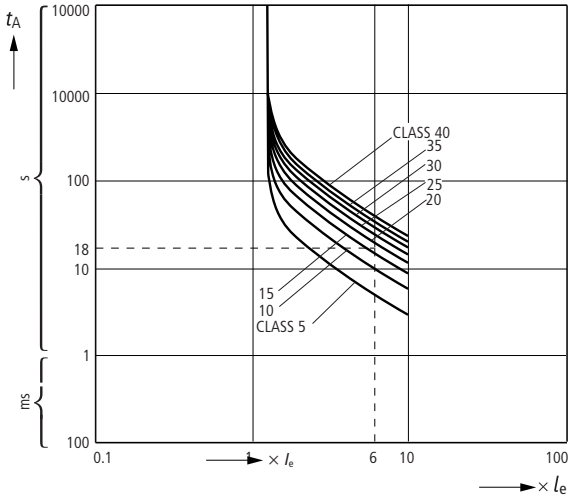

Figure 6: Tripping curve with 3-phase balanced load

The motor is safely protected with the tripping classes CLASS 5, 10 and 15.

Approvals

The motor-protective system ZEV is compliant with IEC/EN 60947 regulations for low-voltage switchgear and EN and fulfils the requirements of the 94/9/EC (ATEX 100a) directives for the protection of motors operated in EEx e areas.

CE 0102 Ex II(2)G

The system is approved by UL and CSA for the USA and Canada.

3 Installation

Notes on installation

The current mechanical and electrical installation instruction manual AWA2300-1694 included with the units must be observed.

→ The basic ZEV units must be configured prior to initial commissioning (→ fig. 22, Page 28).

Warning!
To ensure explosion protection, the ZEV may only be reset/restarted either manually after the recovery time $t_{recovery}$ has expired, or automatically via a control interlock circuit for the motor or electrically driven machine. (→ fig. 25 on Page 29).

A manual reset may be carried out by skilled personnel either locally or in the control room.

Warning!
Particularly for "EEx e" applications, an automatic restart must be safely prevented after an interruption of the control voltage. This is achieved by means of the latching function of the power relay (→ fig. 7 , Page 18).

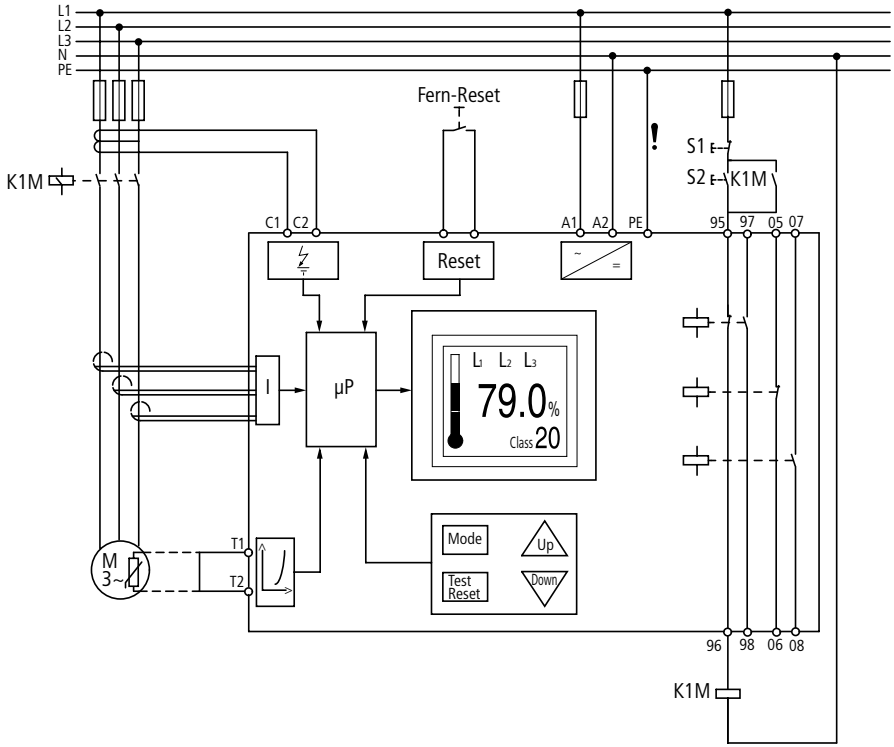

Figure 7: The circuit prevents an automatic restart.

The latching function of the K1M contactor relay prevents an automatic restart.

Warning!
The automatic restart of motors is coupled with the risk of injury and material damage. The risk of an automatic restart is given in following setting in the Reset menu (see also Fig. 25, Page 29).

Mounting the devices

ZEV and ZEV-XSW-25 to 145

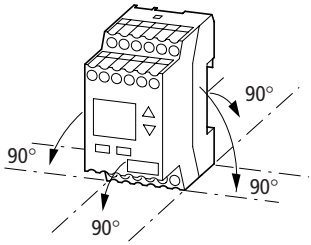

Figure 8: ZEV mounting position

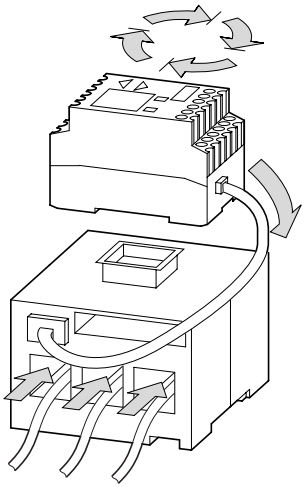

Figure 9: Mounting of the ZEV and current sensor

- ▶ Place the ZEV into the required mounting position.
- ▶ Snap the ZEV onto the current sensor.
- ▶ Feed all motor phases through the current sensor.

The following conductor cross-sections can be used.

Table 5: Maximum conductor cross-sections of the motor cables

Current sensor	Feedthrough Ø mm	Conductor cross-section mm²	AWG
ZEV-XSW-25	6	10 solid or multi-wire	10
ZEV-XSW-65	13	50 fine-wire	1
ZEV-XSW-145	21	150 fine-wire	2/0

Mounting for low motor currents

At the ZEV-XSW-25, the cables for motors operating with a current < 1 A are looped. The number of loops is determined by the rated operational current of the motor I_N (→ table 6).

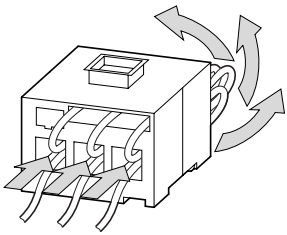

Figure 10: Loops of the motor feed cables

Table 6: Number of loops

	I_N [A] 0.25 to 0.4	0.41 to 0.62	0.63 to 1.24
Number of loops	4	3	2
I_e	4 × (0.25 to 0.4)	3 × (0.41 to 0.62)	2 × (0.63 to 1.24)

I_N = rated operational current of the motor

I_e = current setting at the ZEV

ZEV and ZEV-XSW-820

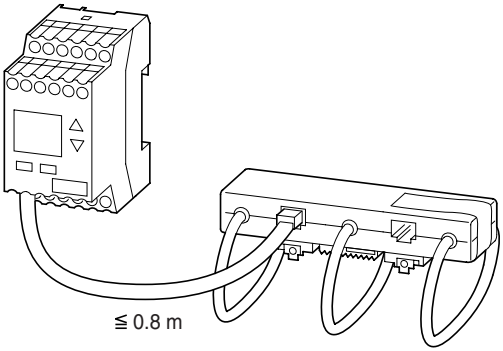

Figure 11: Connection the ZEV and current sensor with the cable

▶ Connect the two units using a ZEV-XVK-... patch cable.

ZEV-XSW-820 strapped to a current busbar

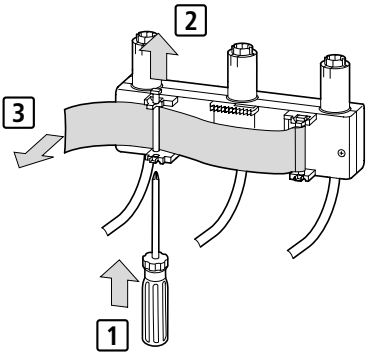

Figure 12: Opening the strap

▶ 1 Release the lock pin.

▶ 2 Remove the lock pin.

▶ 3 Release the strap.

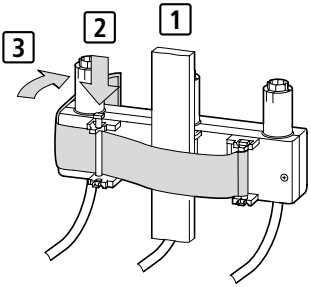

Figure 13: Mounting the unit onto the busbar

- ▶ 1 Fold the strap around the busbar.
- ▶ 2 Engage the lock pin.
- ▶ 3 Fasten the strap.

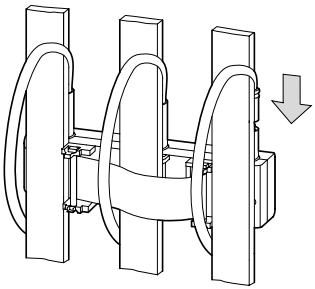

Figure 14: Installation of the sensor cables

- ▶ Install the sensor cable so that each one is wound around only one busbar.

ZEV-XSW-820 strapped to a current busbar with cable ties

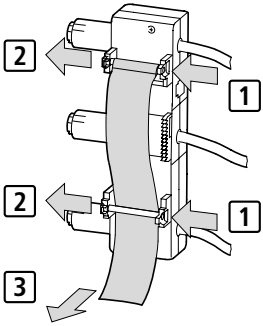

Figure 15: Removal of the strap

- ▶ 1 Release the lock pins.
- ▶ 2 Remove the lock pins.
- ▶ 3 Remove the strap.

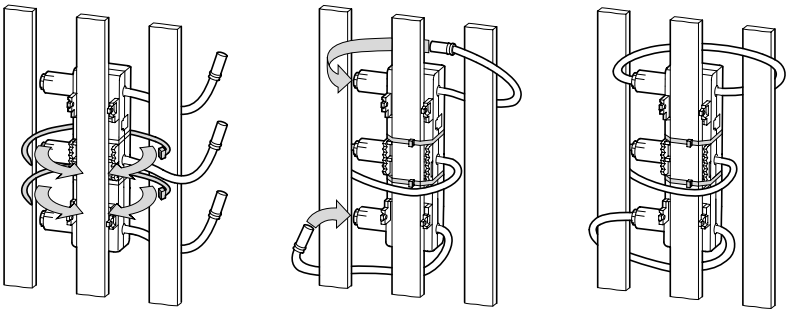

Figure 16: Installation o the cable ties and wiring of the sensor cables

- ▶ Wrap the cable tie around the current sensor and the busbar.
- ▶ Install the sensor cable so that each one is wound only around one busbar.

ZEV-XSW-820 strapped to a > 50 mm^2 power cable

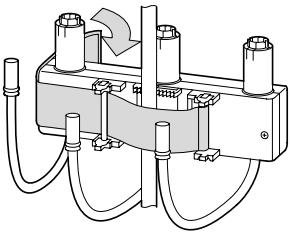

Figure 17: Mounting on power cable

- ▶ Place the strap around the busbar.
- ▶ Engage the lock pin.
- ▶ Fasten the strap.

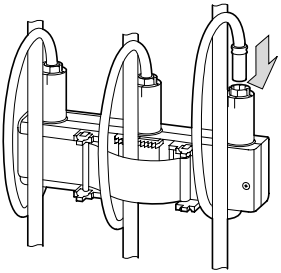

Figure 18: Installation of the sensor cables

- ▶ Install the sensor cable so that each one is looped around one busbar only.

→ Use additional cable ties at temperatures > 50 °C.

ZEV-XSW-820 fastened on a ≦ 50 mm² power cable with cable ties

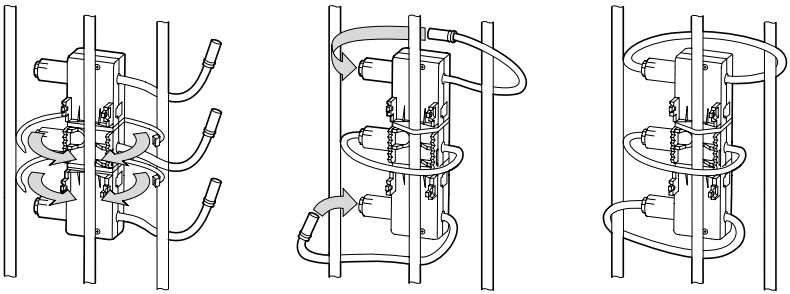

Figure 19: Installation of the cable ties and wiring of the sensor cables

- ▶ Strap the current sensor to the power cable using the cable tie.
- ▶ Install the sensor cable so that each one loops only one power cable.

Connections

Table 7: Conductor cross-sections of the auxiliary cables

mm²	**mm²**	**AWG**	**mm**		**Nm**
1 × (0.5 to 2.5)	1 × (0.5 to 2.5)	18 to 12	0.8 × 5.5	Z1	0.8
2 × (0.5 to 1.0)	2 × (0.5 to 1.0)	18 to 12	0.8 × 5.5	Z1	0.8
2 × (1.0 to 1.5)	2 × (1.0 to 1.5)	18 to 12	0.8 × 5.5	Z1	0.8

Removing devices

ZEV and DIN rail

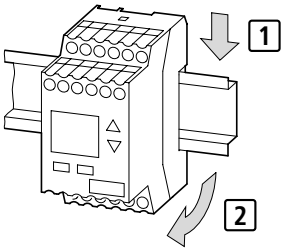

Figure 20: Removing the ZEV from the DIN rail

- ▶ 1 Push the ZEV down to release it.
- ▶ 2 Pull the ZEV off the DIN rail.

Connecting cable

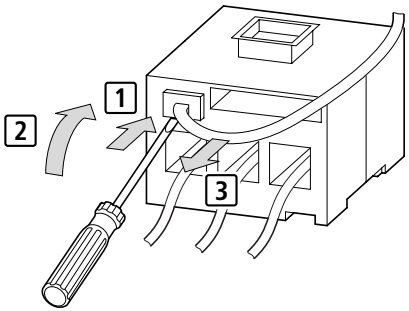

Figure 21: Removing the ZEV-XVK-...

- ▶ 1 Push a screwdriver into the cable socket.
- ▶ 2 Move the screwdriver upwards.
- ▶ 3 Remove the connecting cable.

4 Operating the devices

Settings

The basic ZEV units must be configured prior to initial commissioning. The device provides three buttons for these operations:

- The MODE function key for selecting the various menus. To acknowledge the entries made in the menus, press the MODE button.
- The UP/DOWN button for selecting the desired values from the various menus.
- The RESET/TEST button to exit the menus without saving the values and to return to the previous menu.

The following Figure22 provides an overview of all possible settings at the basic unit.

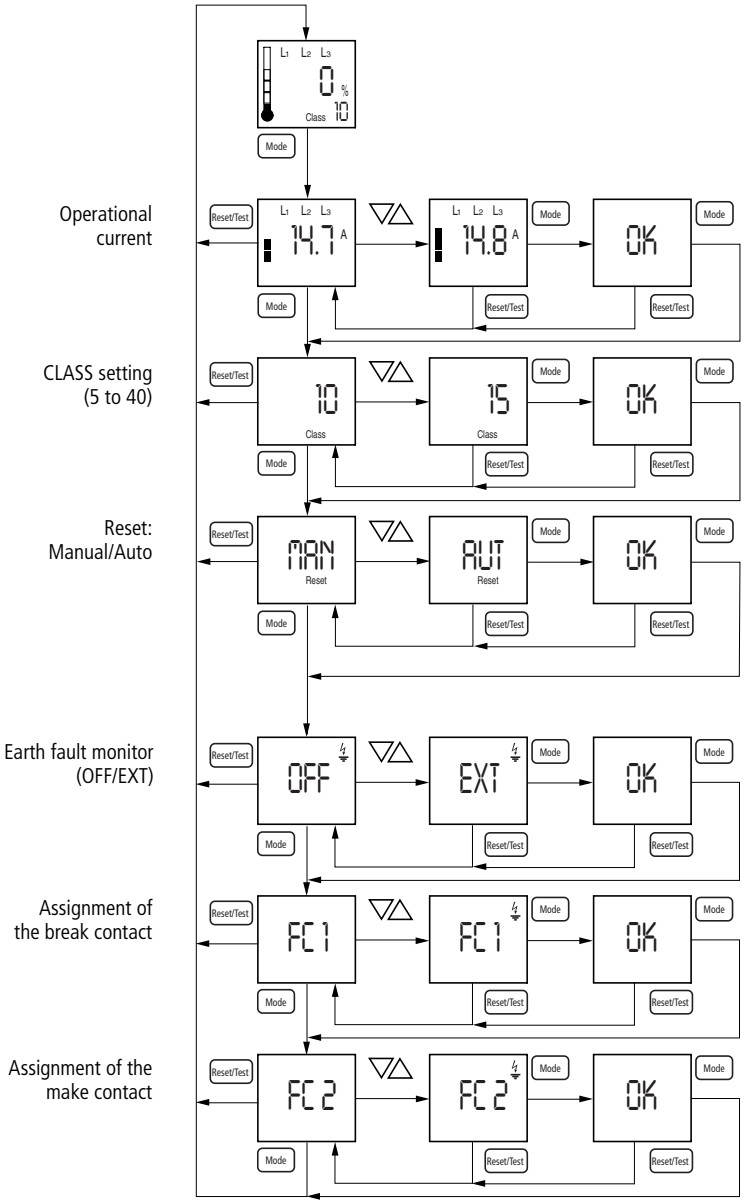

Figure 22: Overview of the settings at the ZEV

Setting the earth fault monitor

▶ Use the UP/DOWN button to set up an auxiliary earth fault monitoring system with external core-balance transformer.

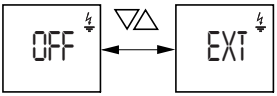

Figure 26: Earth fault monitoring menu

Assigning the free contacts

The FC1 and FC2 contacts are available for connecting a remote message system (→ fig. 27).

▶ Use the UP/DOWN buttons to select which message is to be output via the contacts FC1 or FC2.

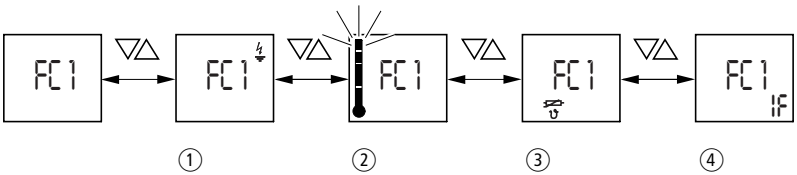

Figure 27 : Free contacts menu

① Earth fault tripping, if not OFF
② Overload pre-warning
③ Thermistor tripping
④ Internal error

Display messages

The ZEV display shows the error messages described below. The indicator flashes at a frequency of 1 Hz if an error has occurred.

Overload tripping

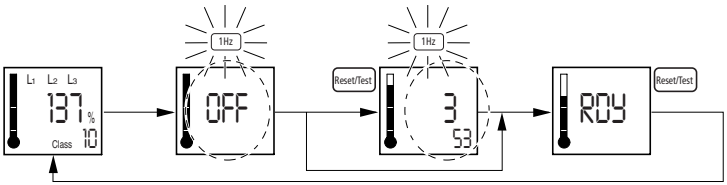

Figure 28: Overload tripping message

Thermistor tripping

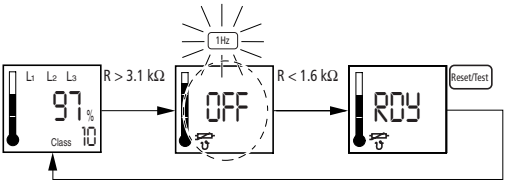

Figure 29: Thermistor tripping message

Earth fault

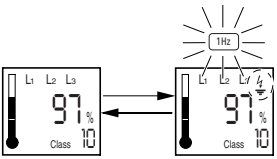

Figure 30: Earth fault message

Phase failure

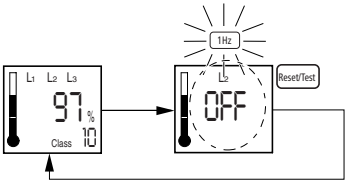

Figure 31: Phase failure message

Current imbalance

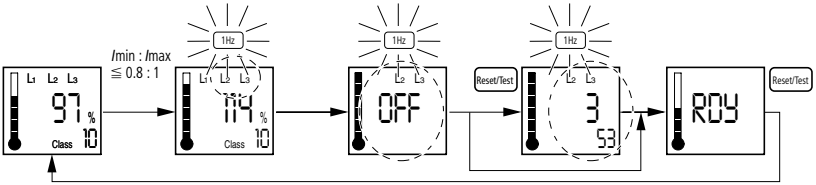

Figure 32: Current imbalance message

Device fault

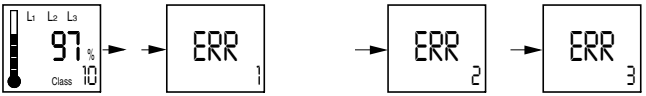

Figure 33 : Device error messages

ERR 1: Sensor error: There is no connection to the current sensor

ERR 2: EEPROM error

ERR 3: Tripping device error

Warning!
Faulty devices (ERR2 and ERR3) may not be opened for repairs and must be replaced only by skilled persons.

Annex

Rating plates

Electronic motor-protective relay ZEV

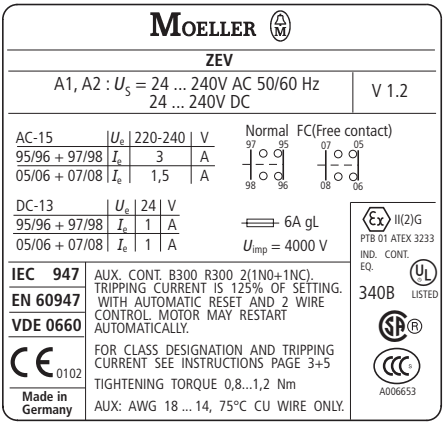

Figure 34: ZEV rating plate

Current sensors ZEV-XSW-...

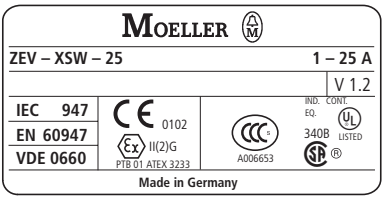

Figure 35: ZEV-XSW-25 rating plate

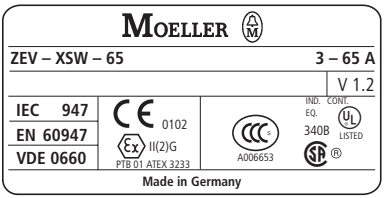

Figure 36: ZEV-XSW-65 rating plate

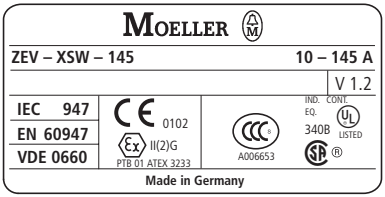

Figure 37: ZEV-XSW-145 rating plate

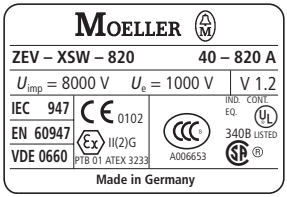

Figure 38: ZEV-XSW-820 rating plate

ZEV tripping curves

3-phase tripping curve

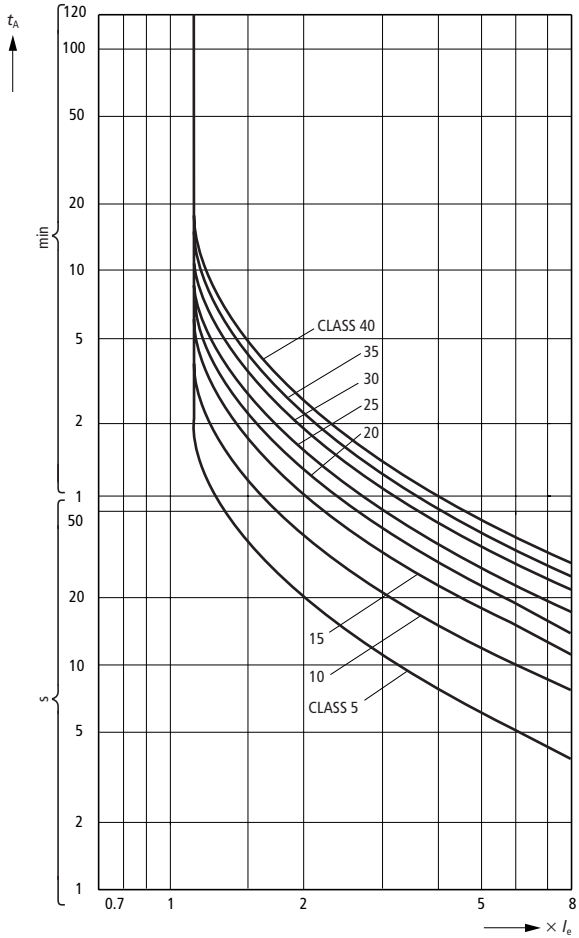

Figure 39: ZEV tripping curve, 3-phase

Table 8: Assignment of the tripping delay to the tripping classes

CLASS	t_A [s]						
	3	**4**	**5**	**6**	**7.2**	**8**	**10**
40	90.5	63.6	49.1	40.0	32.7	29.2	23.0
35	79.2	55.7	43.0	35.0	28.6	25.5	20.1
30	67.9	47.7	36.8	30.0	24.5	21.9	17.2
25	56.6	39.8	30.7	25.0	20.5	18.2	14.4
20	45.3	31.8	24.6	20.0	16.4	14.6	11.5
15	34.0	23.9	18.4	15.0	12.3	10.9	8.6
10	22.6	15.9	12.3	10.0	8.2	7.3	5.7
5	11.3	8.0	6.1	5.0	4.1	3.6	2.9

→ In a 3-phase symmetrical tripping system, the deviation of the tripping delay t_A as of three times the tripping current t_A is ±20 %.

2-phase tripping curve

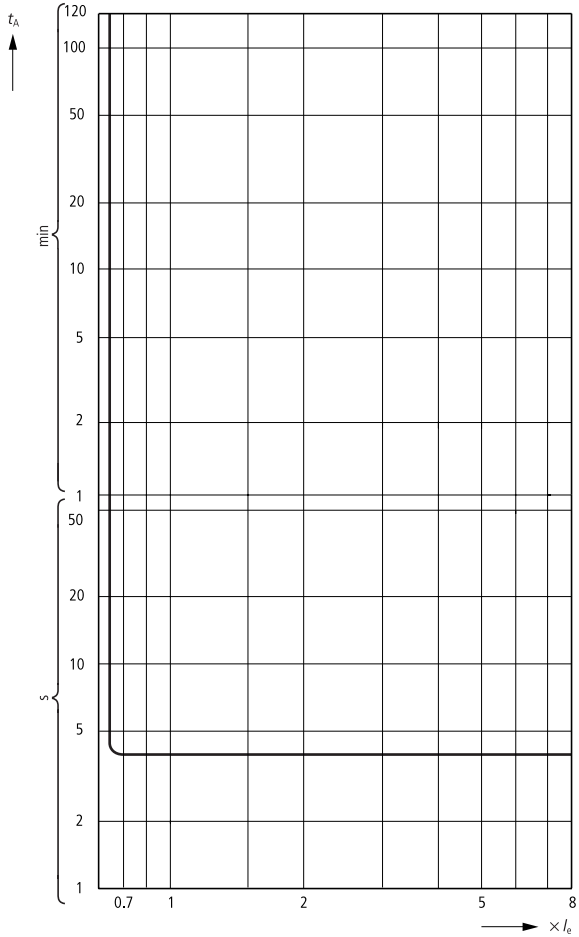

Figure 40: Characteristics curve showing phase failure or imbalance > 50 %

Table 9: Assignment of tripping delay times to the tripping classes

CLASS	t_A [s]						
	3	**4**	**5**	**6**	**7.2**	**8**	**10**
40	2.5	2.5	2.5	2.5	2.5	2.5	2.5
35							
20							
25							
20							
15							
10							
5							

Dimensions

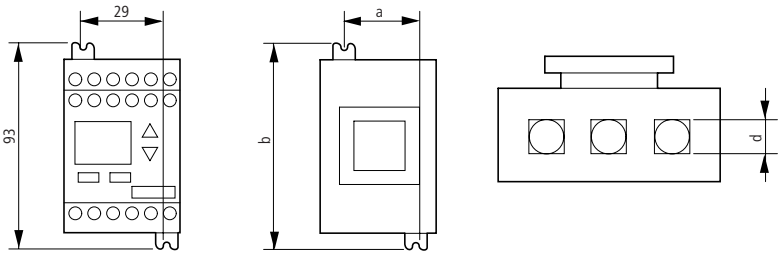

Figure 41: Dimensions of the ZEV and ZEV-XSW

Table 10: Dimensions of the current sensors in [mm]

	ZEV-XSW-		
	25	**65**	**145**
a	24	49	68
b	93	93	93
d	6	13	21

Moeller GmbH
Industrieautomation
Hein-Moeller-Straße 7–11
D-53115 Bonn

E-Mail: info@moeller.net
Internet: www.moeller.net

© 2001 by Moeller GmbH
Subject to alteration
AWB2300-1433GB Doku/Doku/Eb 10/06
Printed in the Federal Republic of Germany (10/06)
Article No.: 267430

4 015082 674304

MOELLER

Think future. Switch to green.