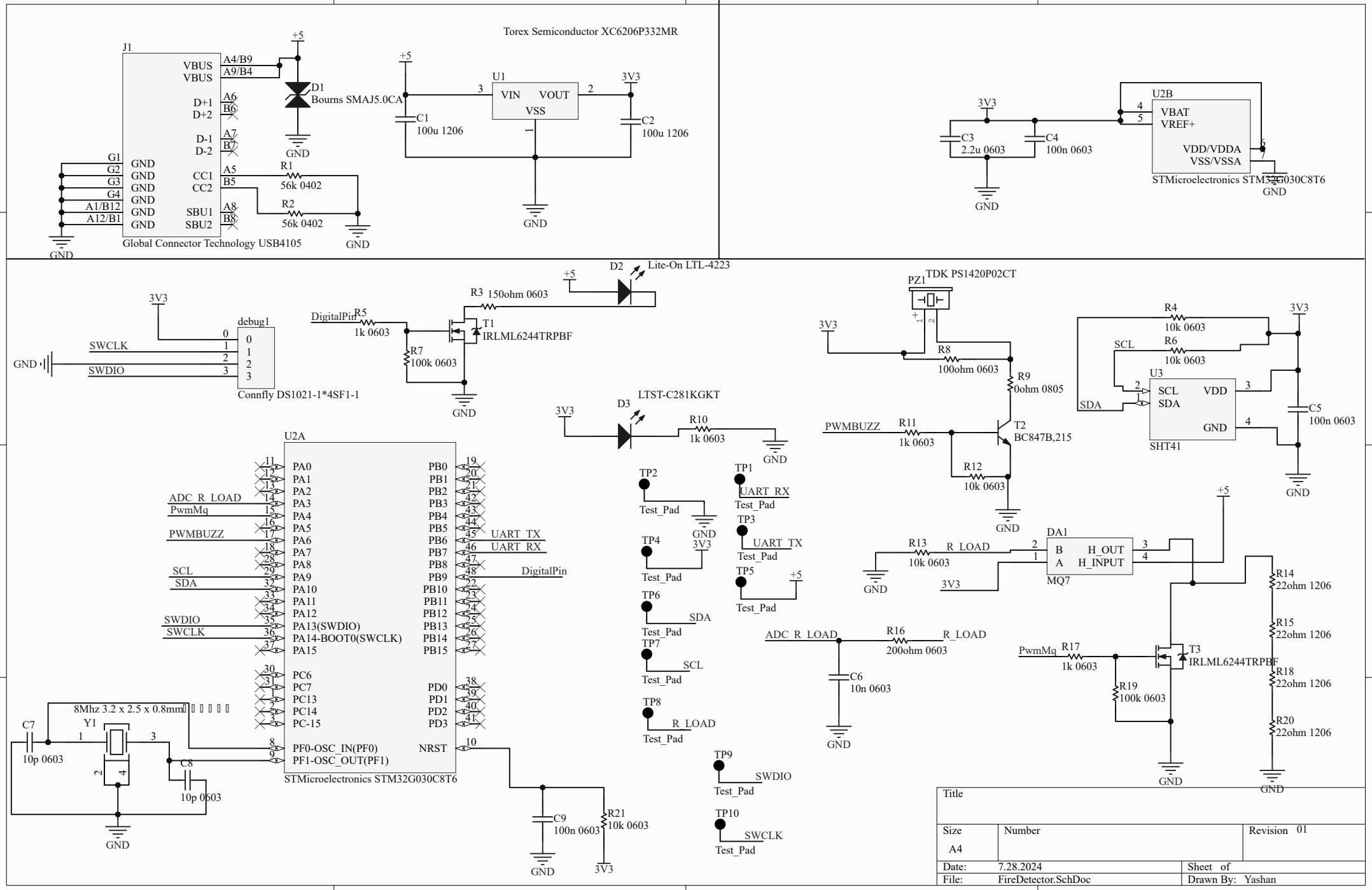
J1
VBUS
VBUS
A4/B9
A9/B4
D+1
D+2
A6
B6
D-1
D-2
A7
B7
GND
GND
GND
GND
GND
GND
CC1
CC2
A5
B5
SBU1
SBU2
A8
B8
G1
G2
G3
G4
A1/B12
A12/B1
Global Connector Technology USB4105
D1
Bourns SMAJ5.0CA
R1
56k 0402
R2
56k 0402
+5
GND
Torex Semiconductor XC6206P332MR
U1
VIN
VOUT
VSS
C1
100u 1206
C2
100u 1206
3V3
U2B
VBAT
VREF+
VDD/VDDA
VSS/VSSA
C3
2.2u 0603
C4
100n 0603
STMicroelectronics STM32G030C8T6
debug1
SWCLK
SWDIO
Connfly DS1021-1*4SF1-1
DigitalPin
R5
1k 0603
R7
100k 0603
R3
150ohm 0603
T1
IRLML6244TRPBF
D2
Lite-On LTL-4223
D3
LTST-C281KGKT
R10
1k 0603
U2A
PA0
PA1
PA2
PA3
PA4
PA5
PA6
PA7
PA8
PA9
PA10
PA11
PA12
PA13(SWDIO)
PA14-BOOT0(SWCLK)
PA15
PC6
PC7
PC13
PC14
PC-15
PF0-OSC_IN(PF0)
PF1-OSC_OUT(PF1)
PB0
PB1
PB2
PB3
PB4
PB5
PB6
PB7
PB8
PB9
PB10
PB11
PB12
PB13
PB14
PB15
PD0
PD1
PD2
PD3
NRST
ADC_R_LOAD
PwmMq
PWMBUZZ
SCL
SDA
SWDIO
SWCLK
UART_TX
UART_RX
DigitalPin
STMicroelectronics STM32G030C8T6
8Mhz 3.2 x 2.5 x 0.8mm
Y1
C7
10p 0603
C8
10p 0603
C9
100n 0603
R21
10k 0603
TP1
UART_RX
TP2
TP3
UART_TX
TP4
TP5
TP6
SDA
TP7
SCL
TP8
R_LOAD
TP9
SWDIO
TP10
SWCLK
Test_Pad
PZ1
TDK PS1420P02CT
R8
100ohm 0603
R9
0ohm 0805
T2
BC847B,215
R11
1k 0603
R12
10k 0603
R4
10k 0603
R6
10k 0603
U3
SCL
SDA
VDD
GND
SHT41
C5
100n 0603
DA1
B
A
H_OUT
H_INPUT
MQ7
R13
10k 0603
R_LOAD
R16
200ohm 0603
C6
10n 0603
R17
1k 0603
T3
IRLML6244TRPBF
R19
100k 0603
R14
22ohm 1206
R15
22ohm 1206
R18
22ohm 1206
R20
22ohm 1206
Title
Size
A4
Number
Revision 01
Date: 7.28.2024
Sheet of
File: FireDetector.SchDoc
Drawn By: Yashan