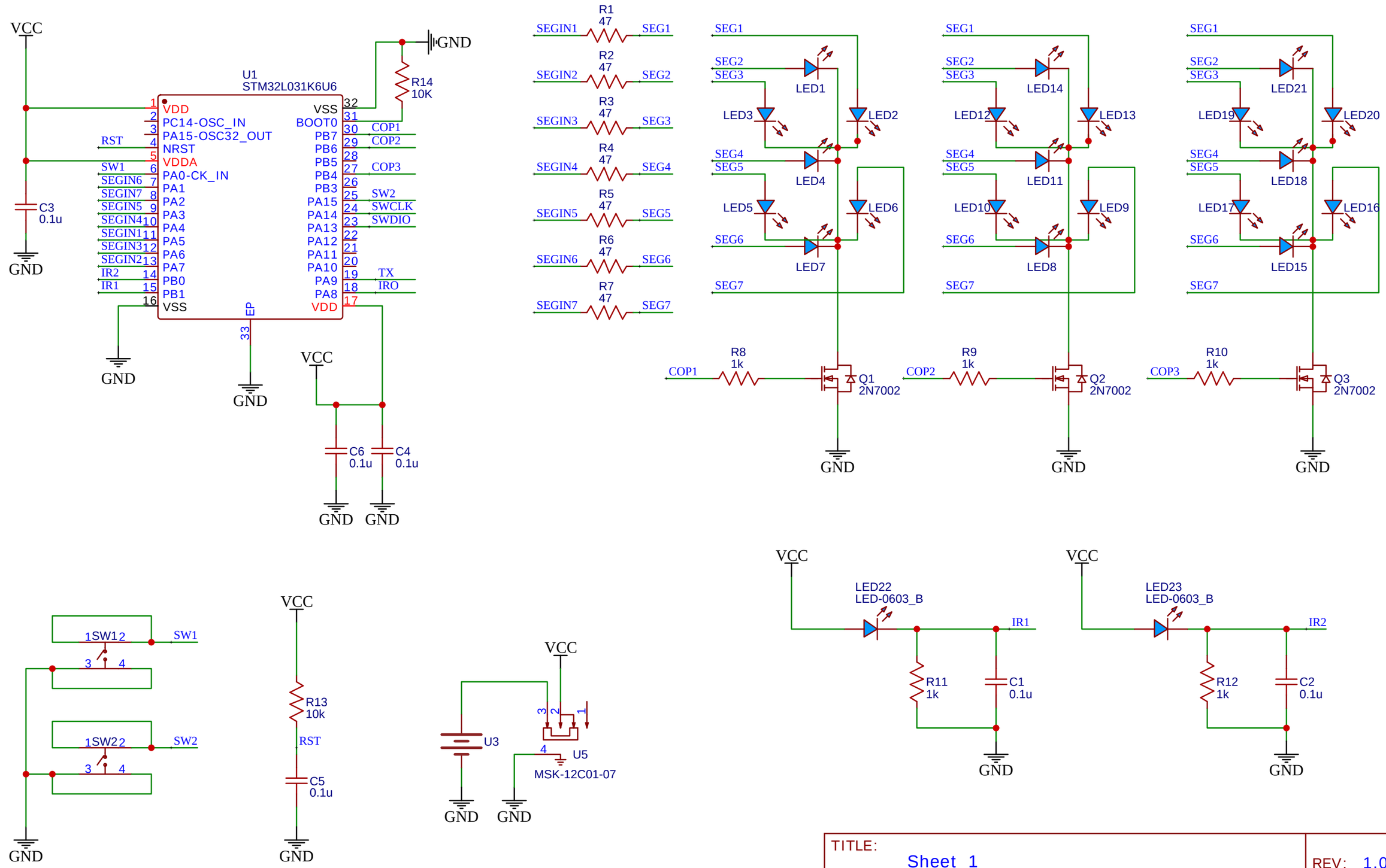

TITLE: Sheet_1	REV: 1.0
立创EDA	Company: Your Company
	Sheet: 1/1
	Date: 2022-05-26 Drawn By: sunhaoqin