# Aerodynamic Analysis and Design of a Finite Wing

Team Members :

- İbrahim Hakkı Koç -22110111023
- Mustafa Üçöz - 21110111006
- Osman Biler – 22110111037
- Elif Hazan Efe – 21110111002

FACULTY OF AERONAUTICS AND ASTRONAUTICS

**Instructor: Prof. Dr. Mustafa Kaya**

# CONTENT

1.INTRODUCTION

2.BASELINE CONFIGURATION

3.IMPROVED WING DESIGN

4.COMPARISON

5. CONCLUSION

# INTRODUCTION

- The main purpose of this project is to analyze the aerodynamic performance of a given finite rectangular wing.
- In the first part, lift and induced drag coefficients are calculated using lifting line theory, which accounts for three-dimensional wing effects.
- In the second part, a new wing is designed under given geometric constraints in order to achieve a **20 percent increase** in lift and a higher **lift-to-drag** ratio.

# GOVERNING EQUATIONS

$$\Gamma(\theta) = 2bV \sum_{n=1}^{N} A_n \sin(n\theta)$$

$$C_{D,i} = \frac{C_L^2}{\pi\, AR} \left( 1 + \sum_{n=2}^{N} \left( \frac{A_n}{A_1} \right)^2 \right)$$

$$\alpha_{geo} + \theta_{twist}(\theta_i) = \frac{4b}{a_0(\theta_i)c(\theta_i)} \sum_{n=1}^{N} A_n \sin(n\theta_i)$$

$$\alpha(\theta_0) = \frac{4\,b \sum_{n=1}^{N} A_n \sin(n\theta_0)}{a_0(\theta_0)\, c(\theta_0)} + \alpha_{L=0}(\theta_0) + \sum_{n=1}^{N} \frac{n\, A_n \sin(n\theta_0)}{\sin\theta_0}$$

$$C_L = \pi\, AR\, A_1$$

# BASELINE CONFIGURATION

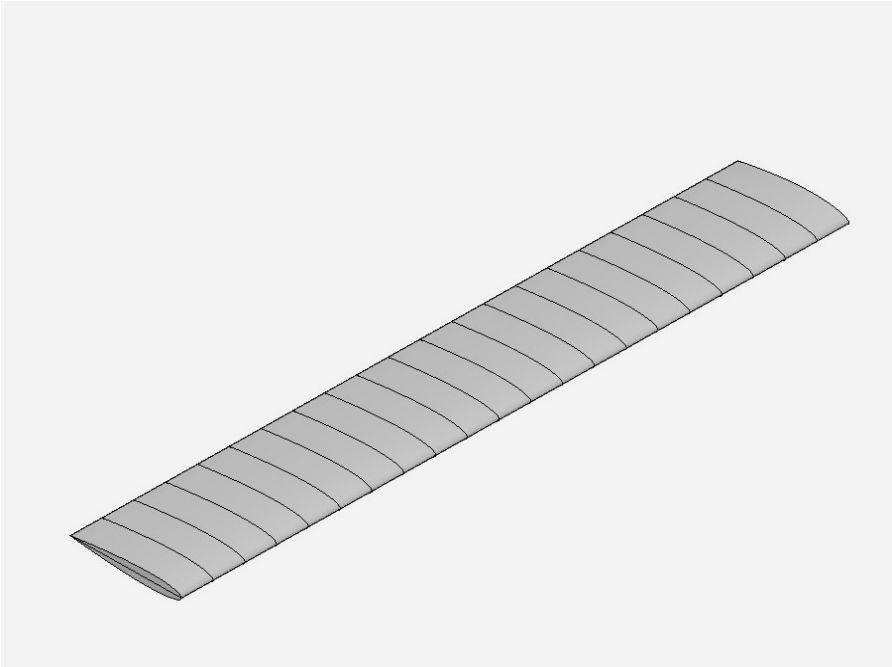

- **Baseline Configuration**
  **(Right Isometric View)**

- All the airfoils along the span is NACA0012
- b = 6 meter
- c = 1 meter
- α = 5 degrees
- All twist angles **0** degrees for all sections

# NACA0012 - BASELINE CONFIGURATION

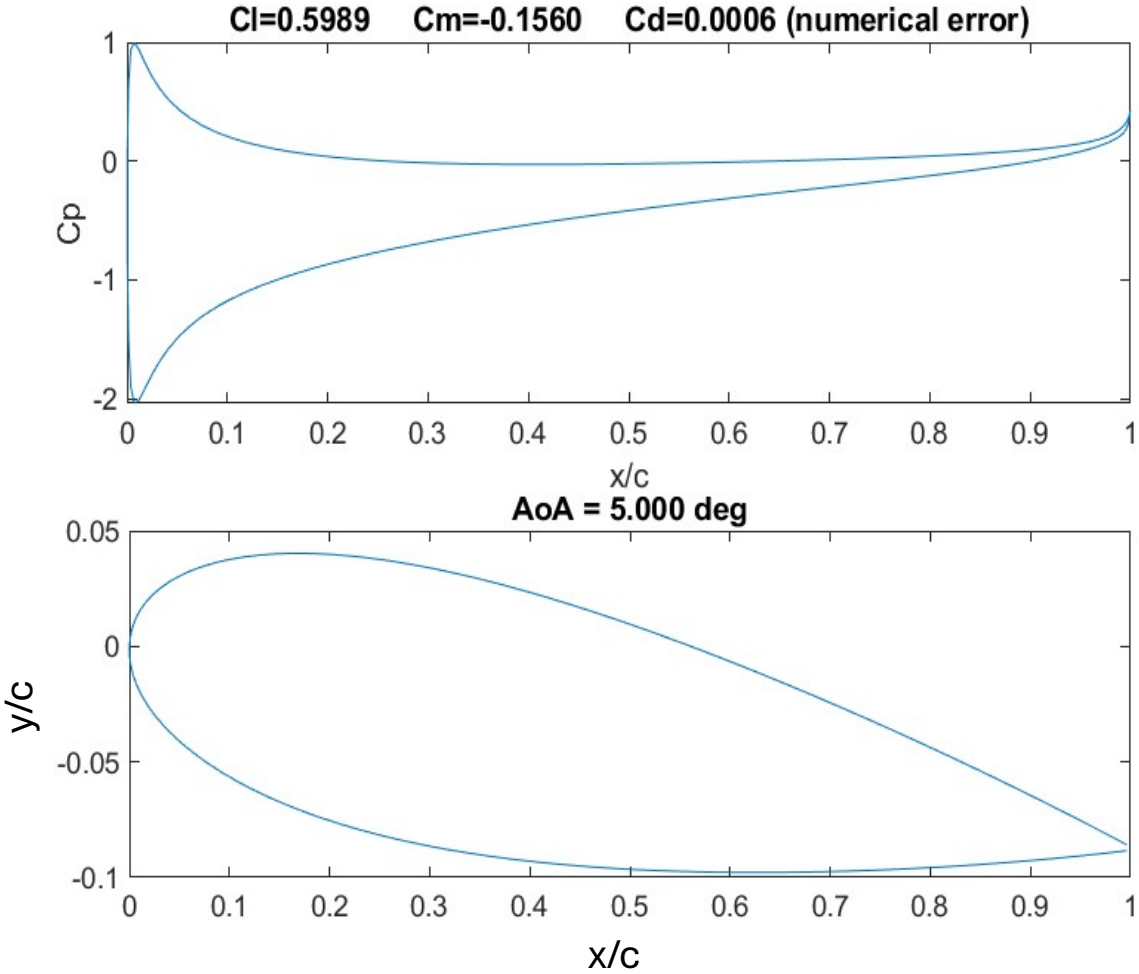


- **Pressure coefficient (Cp) distribution and airfoil geometry for NACA 0012 at α = 5°.**

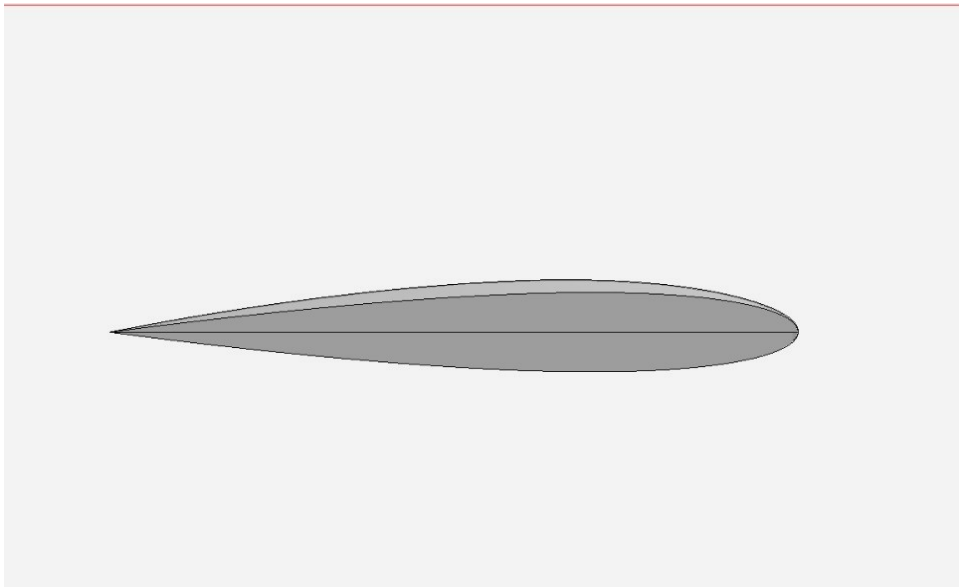

- **Baseline Configuration (Right view)**

# LIFT AND INDUCED DRAG COEFFICIENTS FOR BASELINE CONFIGURATION

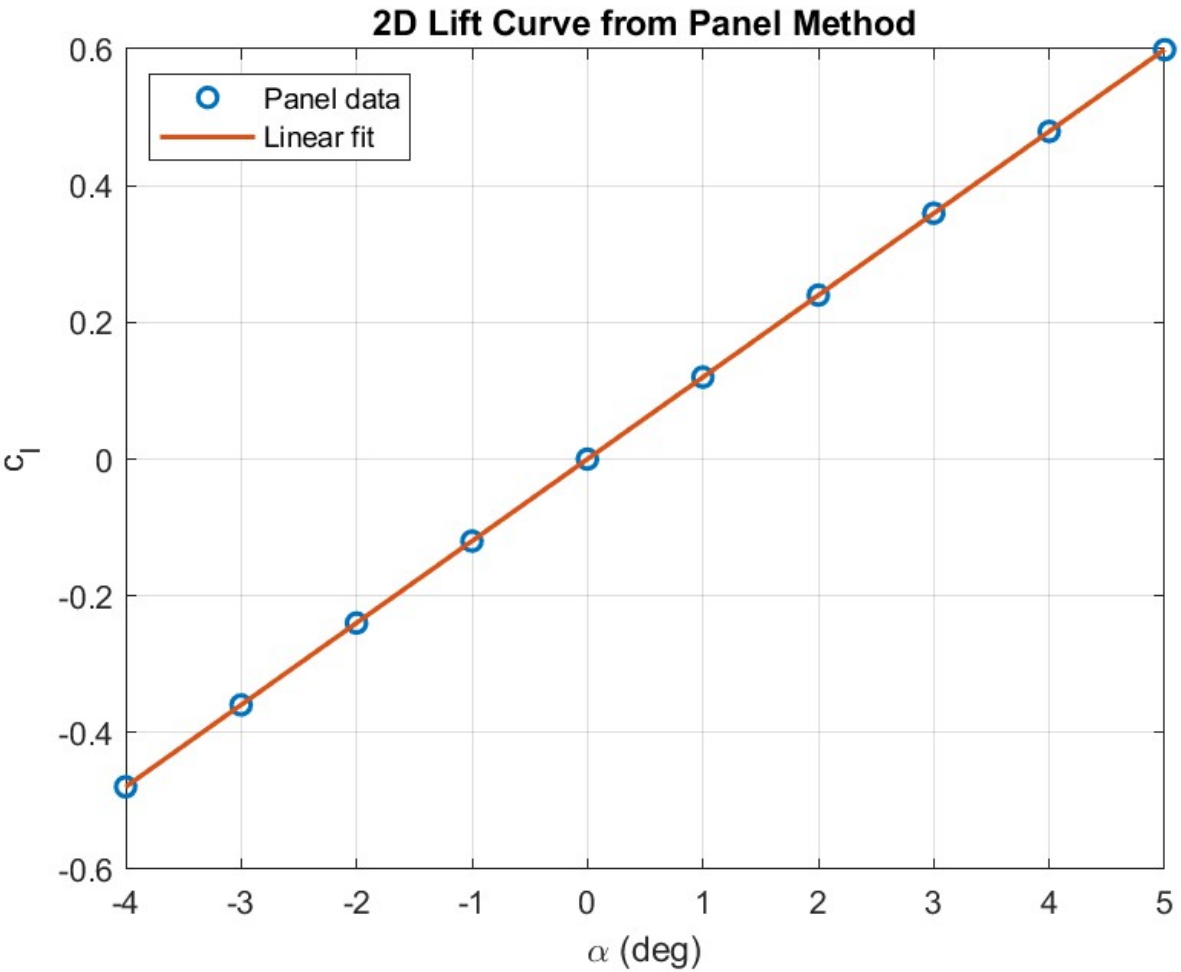


- The lift-curve slope ($a_0$) and zero-lift angle (α_(Cl=0)) of each section were obtained using the panel method and integrated into the lifting-line model.

**$a_0$ = 6.8664**
**α_(Cl=0)=0°**

# LIFT AND INDUCED DRAG COEFFICIENTS FOR BASELINE CONFIGURATION

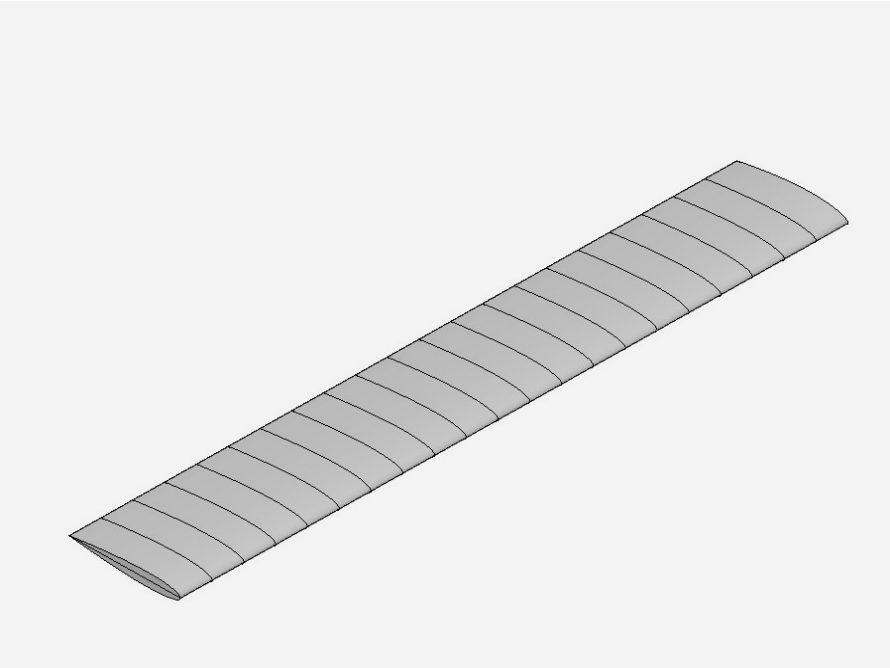

- **Baseline Configuration**
  **(Right Isometric View)**

- To solve the lifting line equations numerically, the wing span is discretized into **21** control points.

- Solving this system numerically yields the Fourier coefficients, which are then used to compute the lift and induced drag coefficients;

- **CL = 0.4221**
- **CDi = 0.009587**

# IMPROVED WING DESIGN

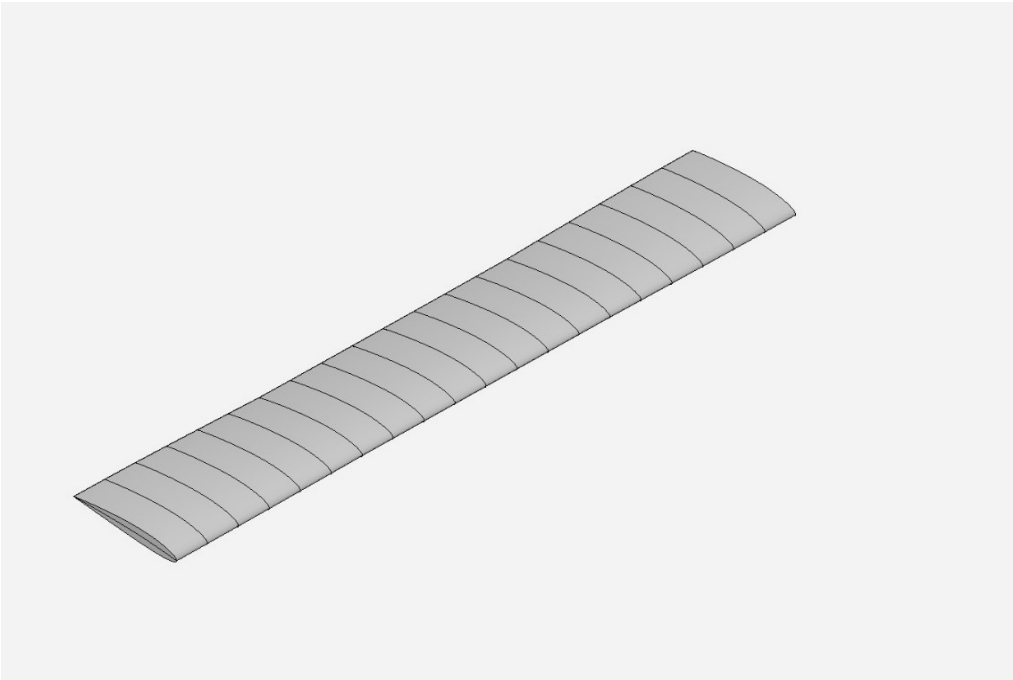

- **Improved Wing Design (Right Isometric View)**

- A new wing is designed under strict geometric constraints. The goal is to increase the lift coefficient by 20% while keeping span and aspect ratio constant, and to maximize the lift-to-drag ratio.

  - CL = 0.4221 (Base)

    (20% increased)

  - CL = 0.5065 (Design minimum)

# NACA 2412 - IMPROVED WING DESIGN

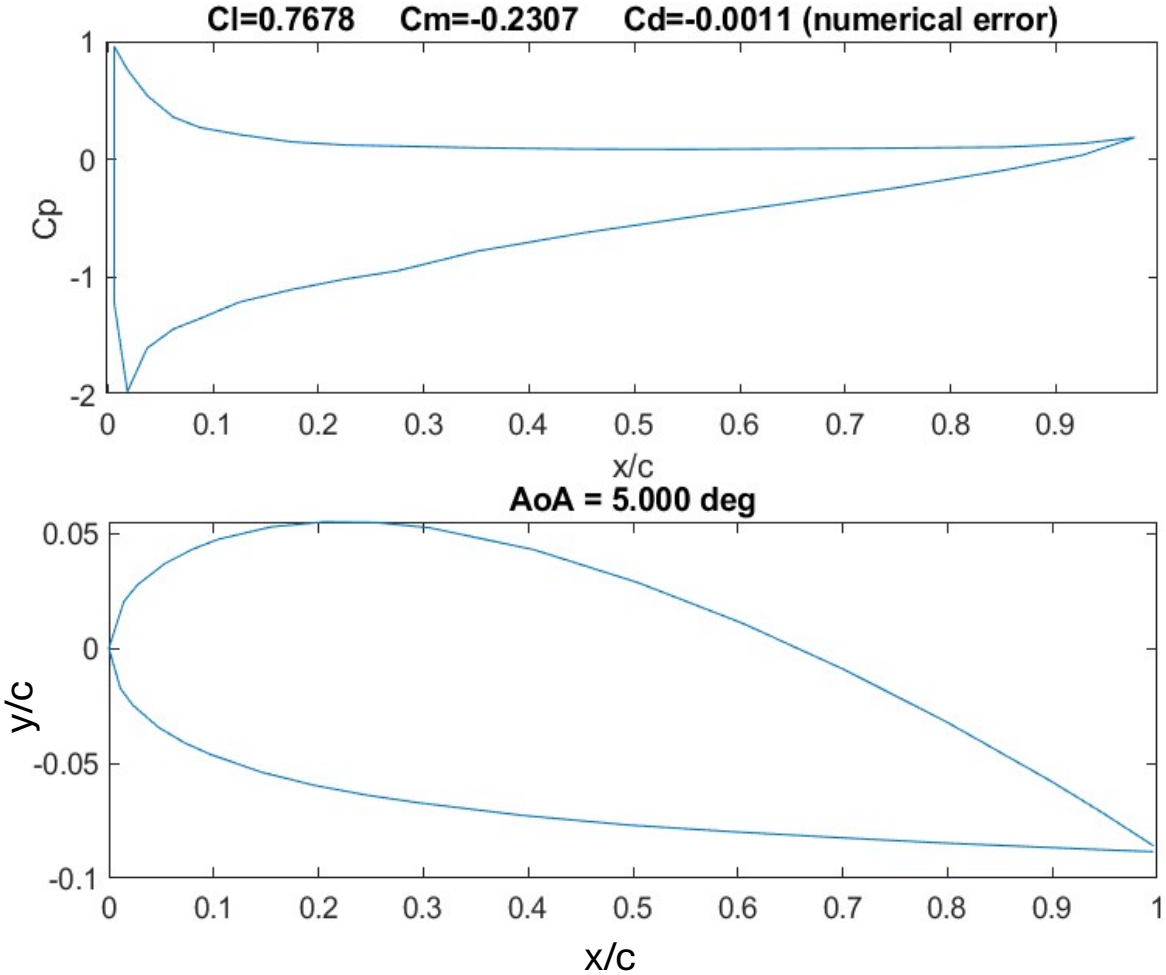


- **Pressure coefficient (Cp) distribution and airfoil geometry for NACA 2412 at α = 5°.**

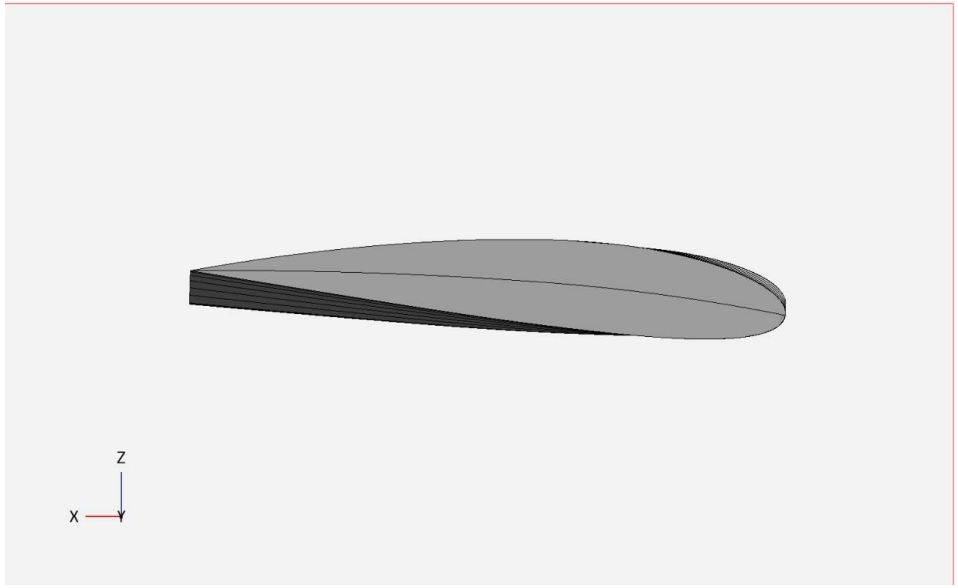


- **Improved Wing Design (Right View)**

# LIFT AND INDUCED DRAG COEFFICIENTS FOR IMPROVED CONFIGURATION

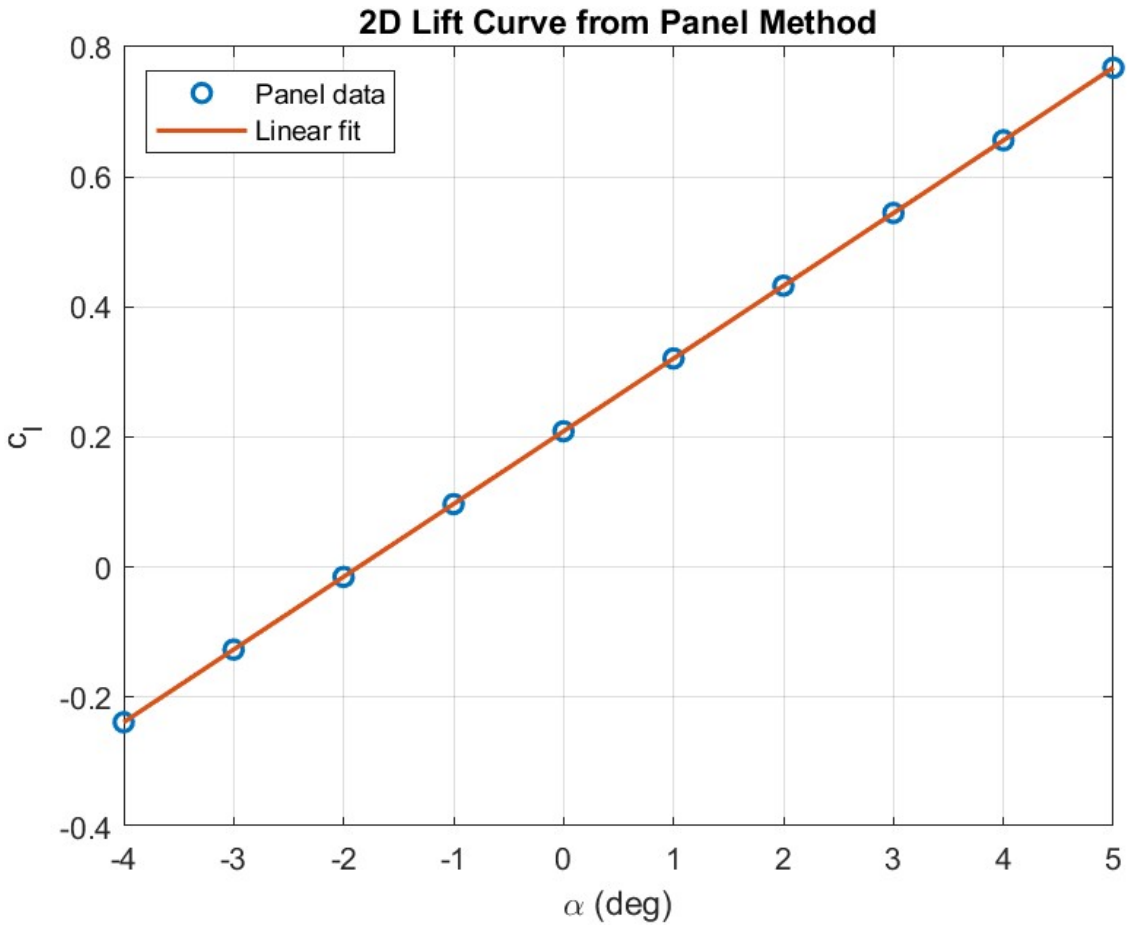


- The lift-curve slope ($a_0$) and zero-lift angle (α_(Cl=0)) of each section were obtained using the panel method and integrated into the lifting-line model.

**$a_0$ = 6.4087**
**α_(Cl=0)=-2°**

# LIFT AND INDUCED DRAG COEFFICIENTS FOR IMPROVED WING DESIGN

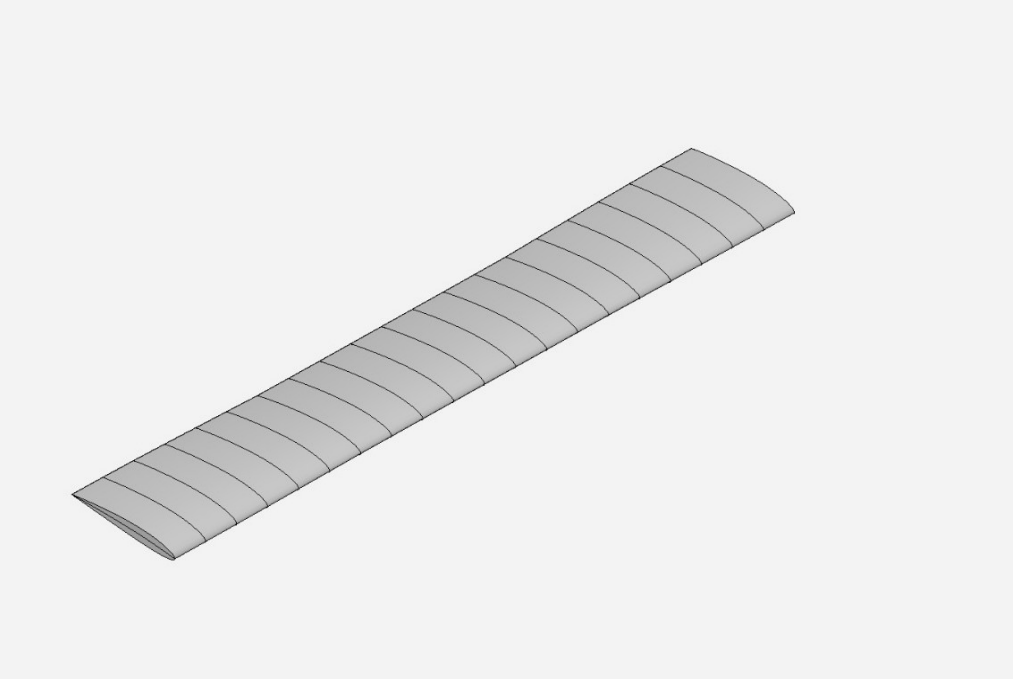

- **Improved Wing Design (Right Isometric View)**

Solving the system yields the lift and induced drag coefficients as;

- **CL = 0.5069**
- **CDi = 0.01368**
- **L/D = 37.0481**

# IMPROVED WING DESIGN

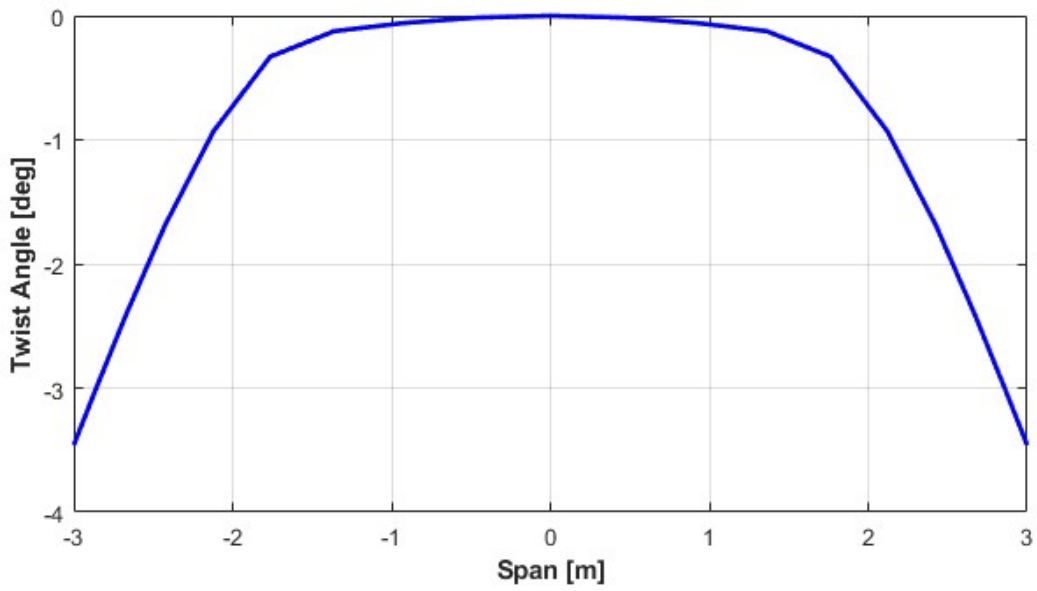


- **Geometric twist distribution for the improved wing with a maximum twist of -3.75° at the tips.**

# LIFT COEFFICIENT ($C_l$) AND MOMENT COEFFICIENT ($C_m$) VS ANGLE OF ATTACK

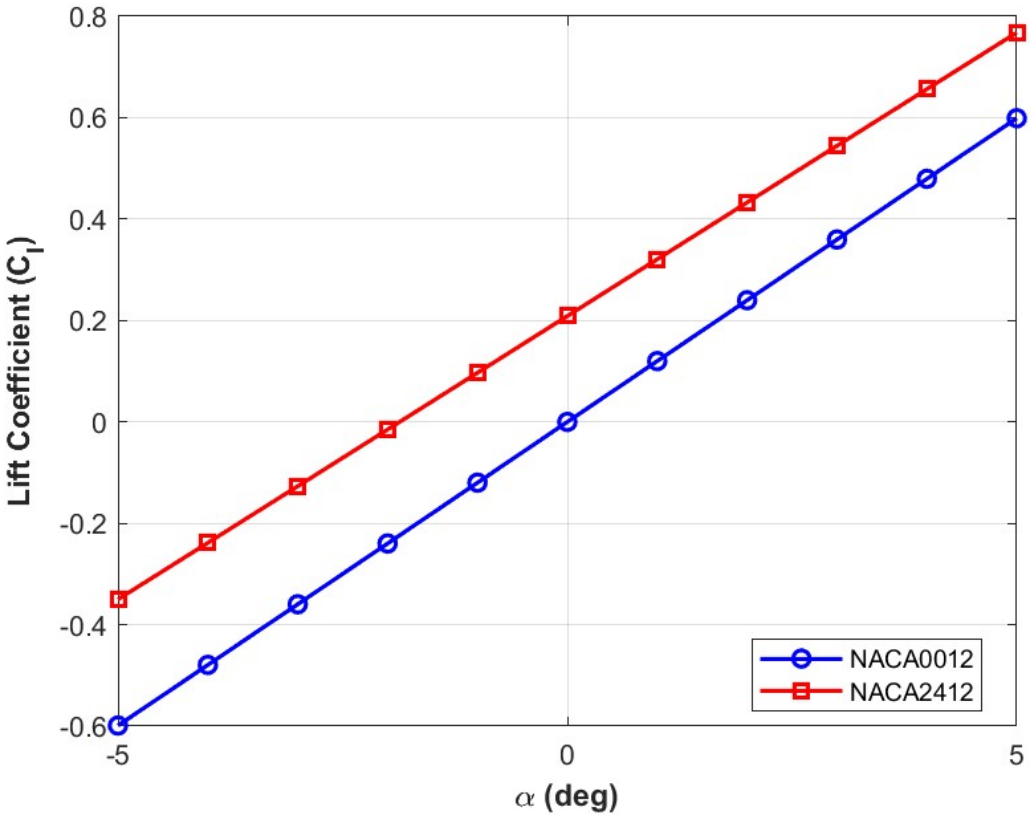


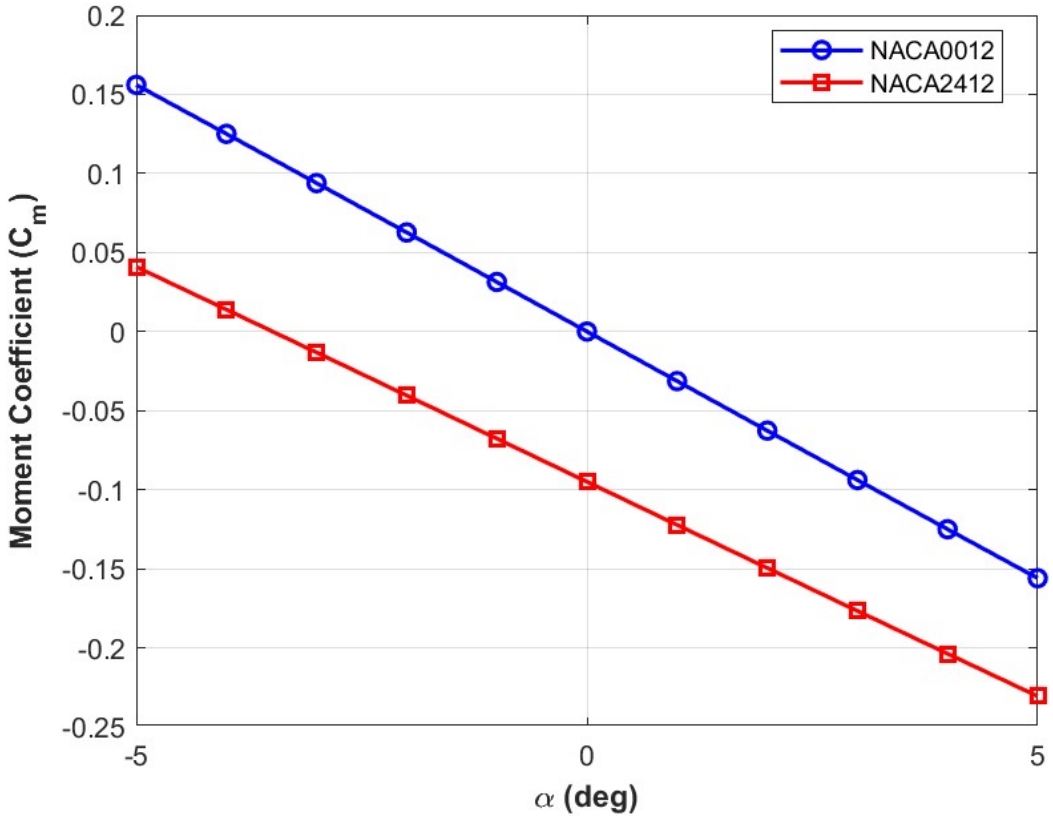


- **Comparison of aerodynamic coefficients Cl and Cm for NACA 0012 and NACA 2412 airfoils.**

# GAMMA DISTRIBUTION – BASELINE CONFIGURATION

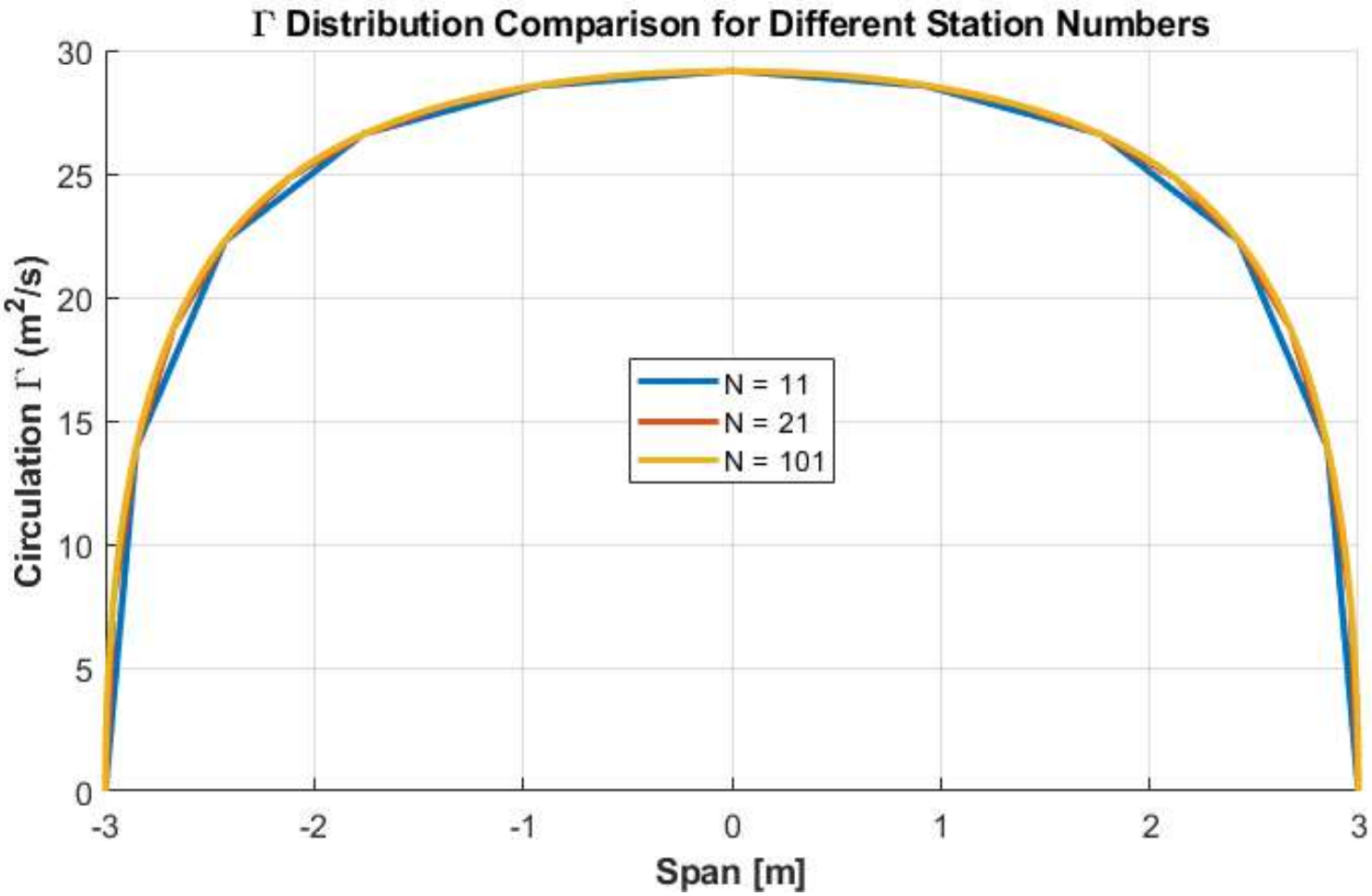

# GAMMA DISTRIBUTION – IMPROVED WING DESIGN

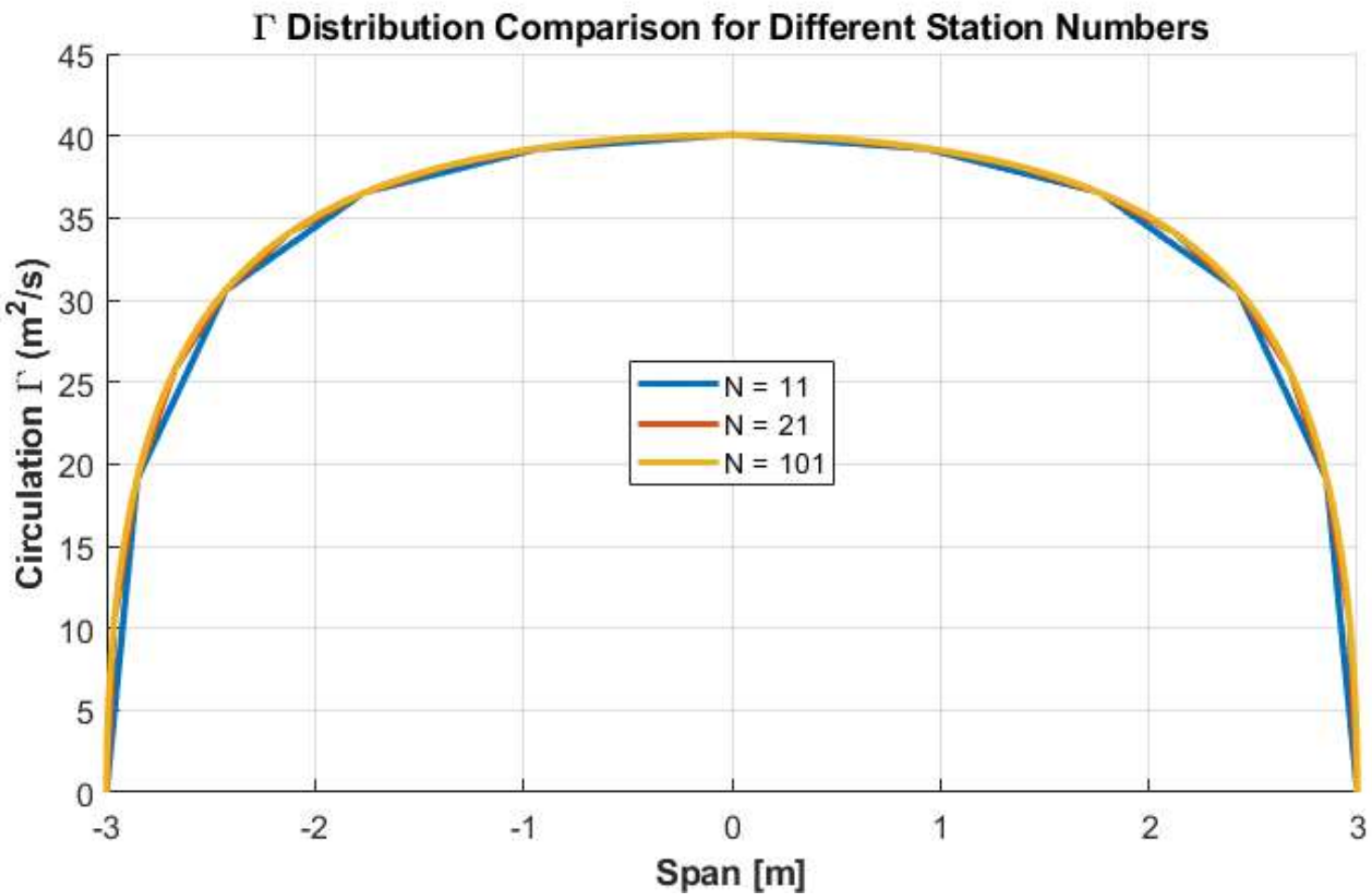

# GAMMA DISTRIBUTION

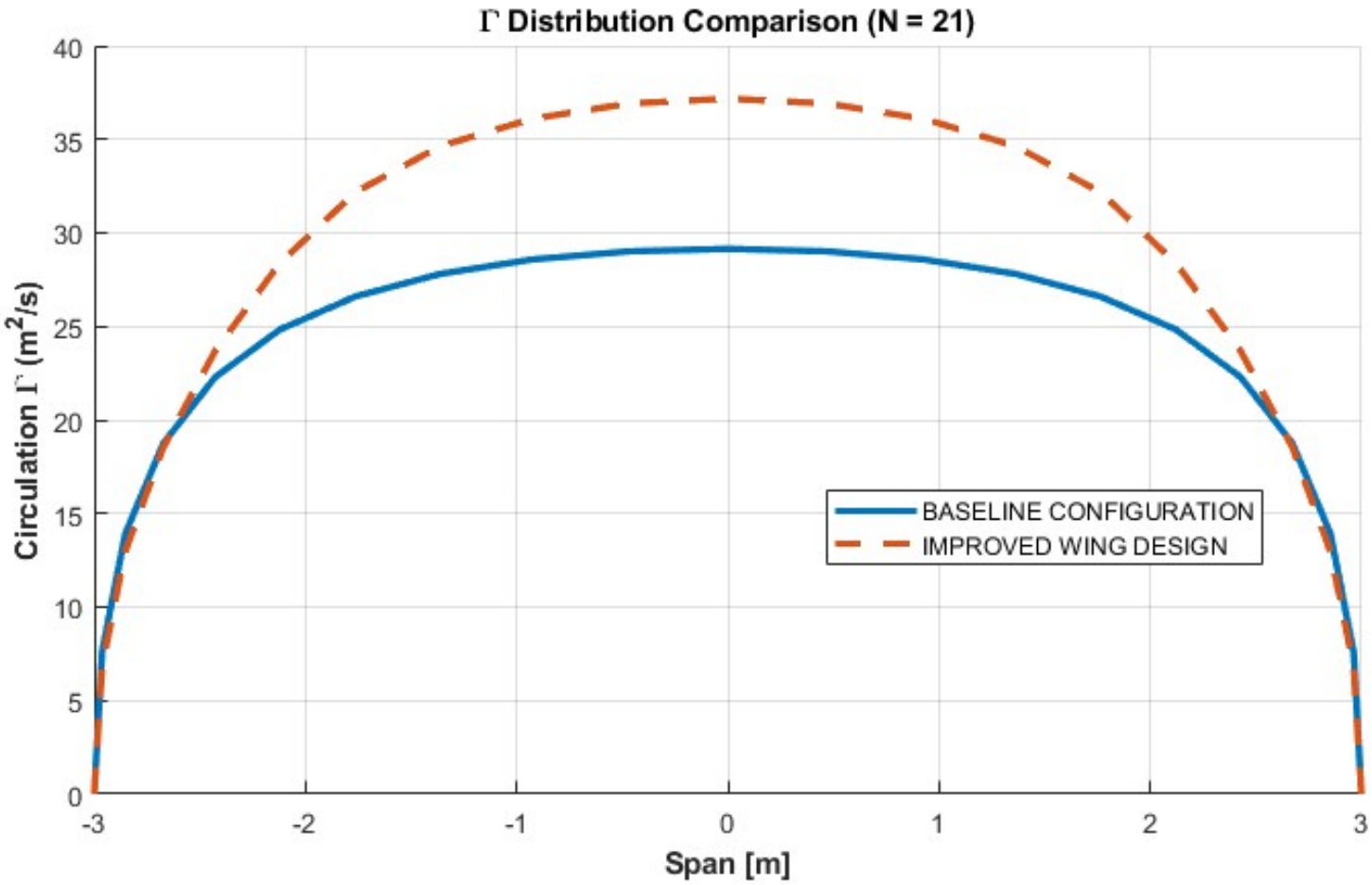

# CONCLUSION

- Achieved the targeted **20% increase in lift coefficient CL** compared to the baseline configuration.
- Applied an optimized **twist distribution** while keeping the effective angle of attack below 5°.
- Obtained a lift distribution closer to the **elliptical ideal**, reducing induced drag.
- Maximized the overall **L/D ratio**, demonstrating a significant improvement over the initial configuration.

THANK YOU FOR LISTENING