ANKARA YILDIRIM BEYAZIT UNIVERSITY

FACULTY OF AERONAUTICS AND ASTRONAUTICS

TERM PROJECT

AEE383 - SYSTEM DYNAMICS AND CONTROL

Mahmut Öztürk

Mehmet Akın

İbrahim Hakkı Koç

İdris Nebi Uzun

10.01.2025

Contents

1 Introduction **3**

1.1 Project Objective 3

1.2 Scope 3

1.3 Methodology 3

2 Mechanical Design **3**

2.1 Hub and Rudder Design 3

2.2 Shaft Design 4

2.3 Assembly of the System 5

2.4 Motion Mechanism 6

2.5 Physical Constraints 7

3 Simulation and Control Design **7**

3.1 Control Problem Definition 7

3.2 Simulink Model 7

3.3 PID Control Design 7

3.4 Simulation Results 8

4 Analysis and Evaluation **8**

4.1 Performance Analysis 8

4.2 Error Analysis 8

5 Conclusion and Recommendations **8**

5.1 Findings 8

5.2 Future Work 8

A Simulink Model Details **8**

B SolidWorks Technical Drawings **9**

C 28BYJ-48 – 5V Stepper Motor Data Sheet **10**

1 Introduction

1.1 Project Objective

The aim of this project is to design and simulate a rudder system that meets specific operational requirements. The report covers both the mechanical and control aspects of the system.

1.2 Scope

This report details the mechanical design created using SolidWorks and the control system implemented in Simulink. It also includes a real-life implementation of the designed system.

1.3 Methodology

The mechanical design was developed in SolidWorks, while the control system was modeled and simulated in Simulink. A PID controller was used to manage the rudder's movement within defined limits. The system was manufactured and controlled using a 3D printer.

2 Mechanical Design

2.1 Hub and Rudder Design

We made sure to develop the design in accordance with the specified requirements and as realistically as possible. Inspired by aircraft wings and ailerons, we decided to work with a horizontal hub. To minimize production costs and better analyze the dynamic motion, we optimized the dimensions to be portable and suitable for desktop-level examination. After deciding on the design, we first designed the hub and rudder system. We defined the rudder shape as elliptical and designed the hub to match this shape. As for the material, we chose PLA due to its cost advantages and easy availability, as we decided to use a 3D printer. We set the system's horizontal and vertical dimensions to 0.2 meters, and its height to 0.13 meters.

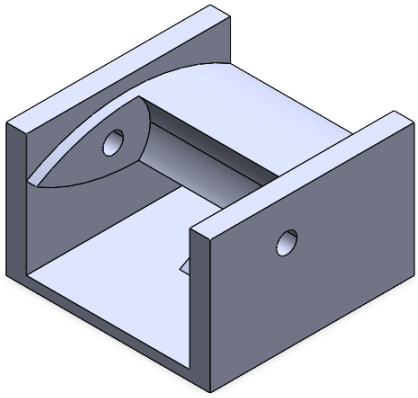

Figure 1: Hub design with elliptical rudder shape

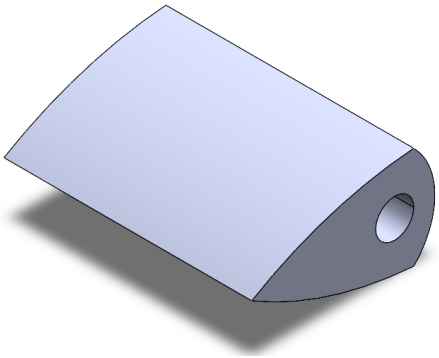

Figure 2: Rudder design with elliptical shape

2.2 Shaft Design

When designing the shaft, we determined the dimensions to fit the system's geometry. We selected the position of the bearing, and since we would be directly connecting the motor to the shaft, we used the motor's data sheet measurements to create an appropriate slot.

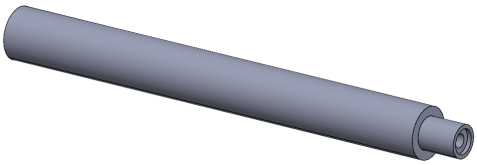

Figure 3: Shaft design for the system

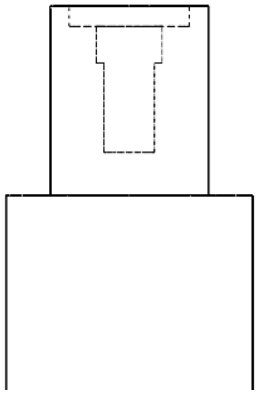

Figure 4: Slot design for motor connection

2.3 Assembly of the System

After completing the designs, we assembled the final configuration of the system by appropriately integrating the components in SolidWorks.

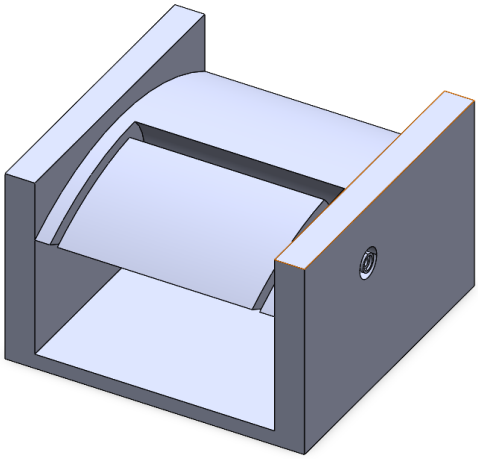

Figure 5: Final system assembly in SolidWorks

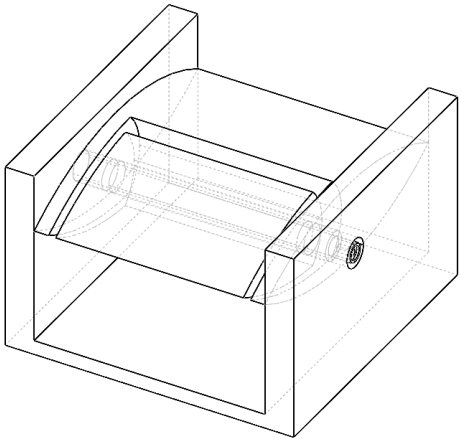

Figure 6: Detailed view of system assembly

2.4 Motion Mechanism

We perform the rudder movement using a DC motor in Simulink and a 5V stepper motor in real life. As mentioned, we designed the shaft with respect to the motor to control the rudder. The working principle of the mechanism ensures accurate and reliable movement.

Figure 7: Stepper Motor

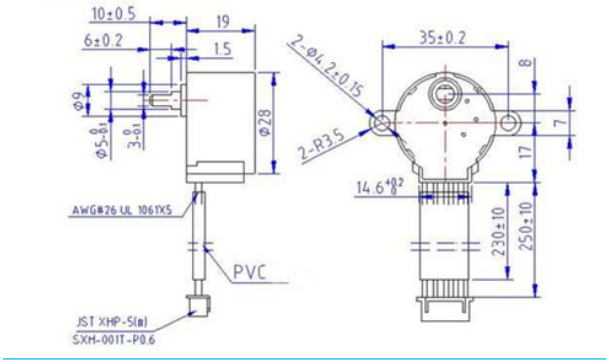

Figure 8: Dimensions of motor

2.5 Physical Constraints

We limited the rudder movement to ±90°. We performed structural analysis to ensure the design's durability under operational loads.

3 Simulation and Control Design

3.1 Control Problem Definition

The rudder system is controlled to achieve precise angular movements in response to input signals. The system dynamics were modeled, and a PID controller was implemented.

3.2 Simulink Model

Figure 9: Simulink model of the rudder system.

The Simulink model includes blocks for rudder dynamics, a PID controller, and system constraints.

3.3 PID Control Design

The PID gains were tuned using the Ziegler-Nichols method to achieve optimal performance. The key metrics evaluated were rise time, overshoot, and settling time.

3.4 Simulation Results

Figure 10: Simulation results showing rudder angle and control signal.

The simulation results confirm that the system operates within the defined constraints and meets performance requirements.

4 Analysis and Evaluation

4.1 Performance Analysis

The mechanical design and control system were evaluated for accuracy and stability. The simulation results align with the physical design parameters.

4.2 Error Analysis

Potential sources of error include friction, delays in actuation, and modeling inaccuracies. Suggestions for minimizing these errors are provided.

5 Conclusion and Recommendations

5.1 Findings

The project successfully integrated mechanical design and control system simulation. The rudder operates effectively within the defined range of motion.

5.2 Future Work

Future work could include testing a physical prototype, exploring alternative control strategies, and incorporating additional constraints such as environmental factors.

A Simulink Model Details

Include detailed screenshots or descriptions of the Simulink model.

B SolidWorks Technical Drawings

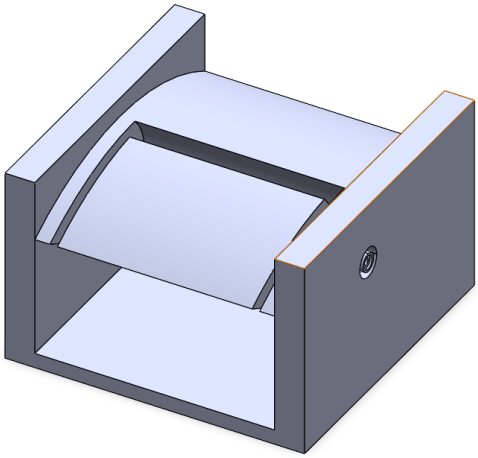

Figure 11: Final system assembly in SolidWorks

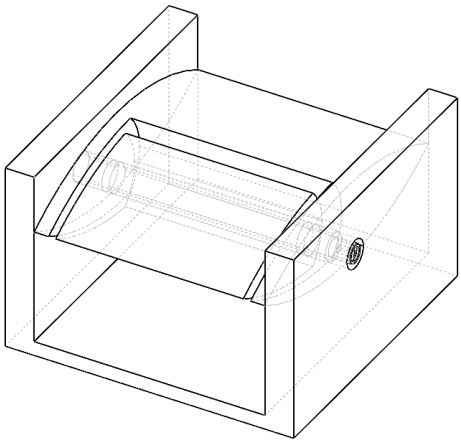

Figure 12: Detailed view of system assembly

C 28BYJ-48 – 5V Stepper Motor Data Sheet

28BYJ-48 – 5V Stepper Motor

The 28BYJ-48 is a small stepper motor suitable for a large range of applications.

Rated voltage :	5VDC
Number of Phase	4
Speed Variation Ratio	1/64
Stride Angle	5.625°/64
Frequency	100Hz
DC resistance	50Ω±7%(25°C)
Idle In-traction Frequency	> 600Hz
Idle Out-traction Frequency	> 1000Hz
In-traction Torque	>34.3mN.m(120Hz)
Self-positioning Torque	>34.3mN.m
Friction torque	600-1200 gf.cm
Pull in torque	300 gf.cm
Insulated resistance	>10MΩ(500V)
Insulated electricity power	600VAC/1mA/1s
Insulation grade	A
Rise in Temperature	<40K(120Hz)
Noise	<35dB(120Hz,No load,10cm)
Model	28BYJ-48 – 5V

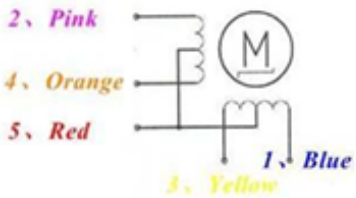

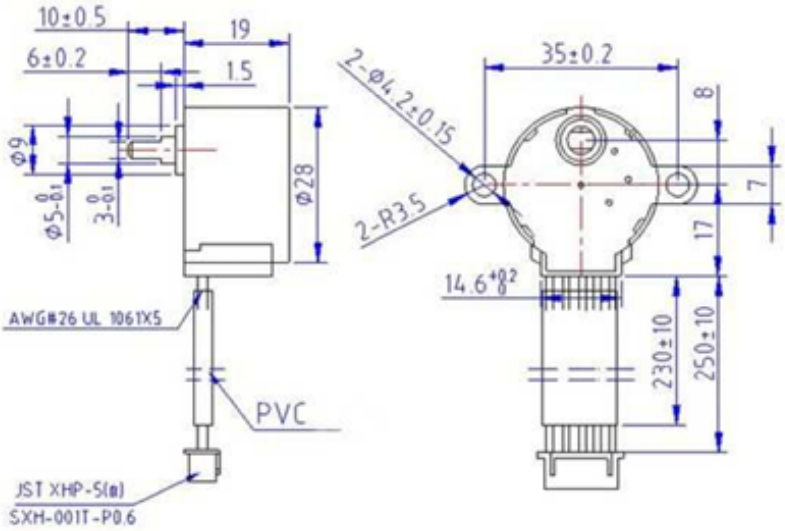

Figure 13: Data sheet of 28BYJ-48 – 5V Stepper Motor