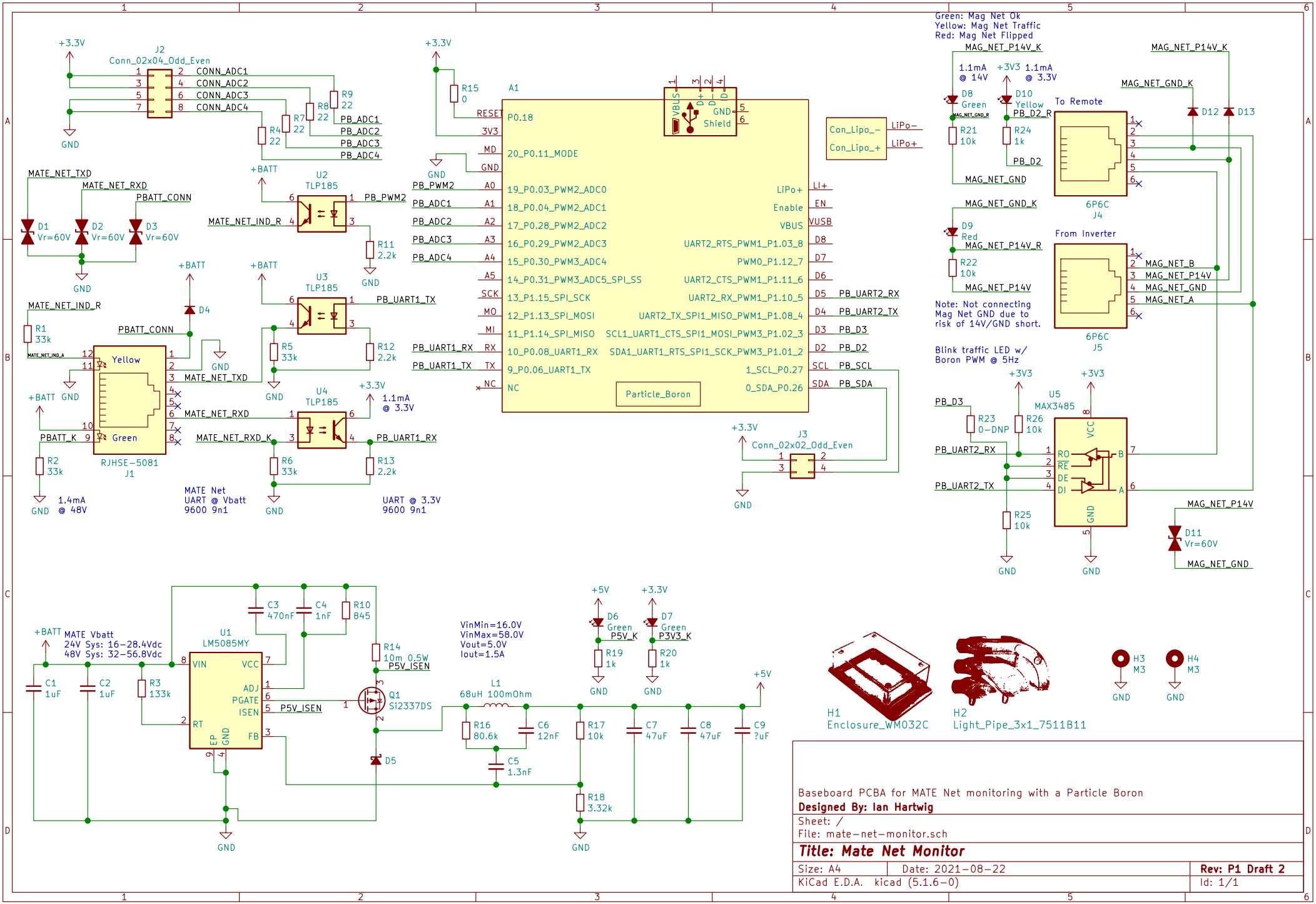

Baseboard PCBA for MATE Net monitoring with a Particle Boron

Designed By: Ian Hartwig

Sheet: /

File: mate-net-monitor.sch

Title: Mate Net Monitor

Size: A4	Date: 2021-08-22	**Rev: P1 Draft 2**
KiCad E.D.A. kicad (5.1.6-0)		Id: 1/1