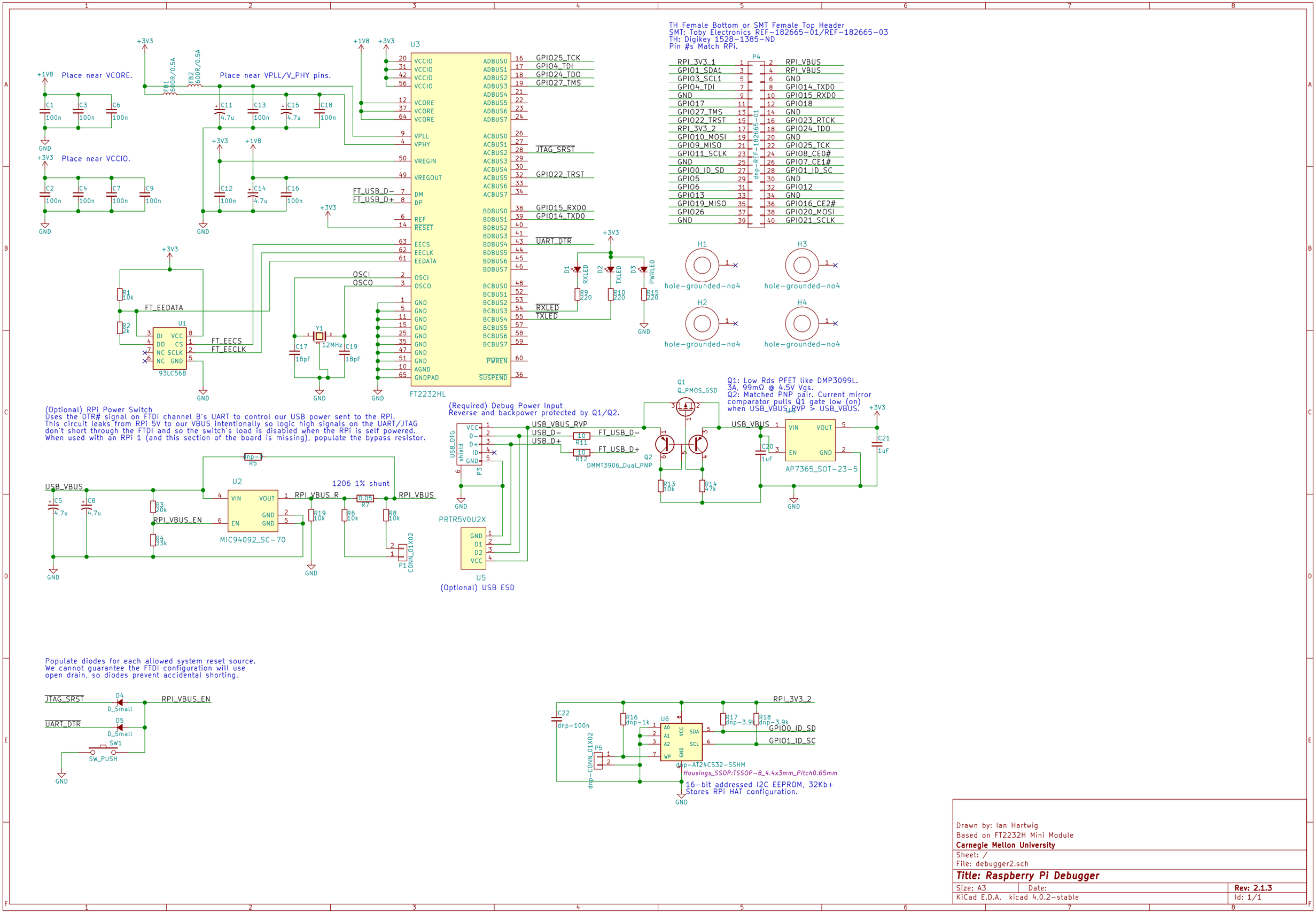

Drawn by: Ian Hartwig
Based on FT2232H Mini Module
Carnegie Mellon University

Sheet: /
File: debugger2.sch

Title: Raspberry Pi Debugger

Size: A3	Date:	Rev: 2.1.3
KiCad E.D.A. kicad 4.0.2-stable		Id: 1/1