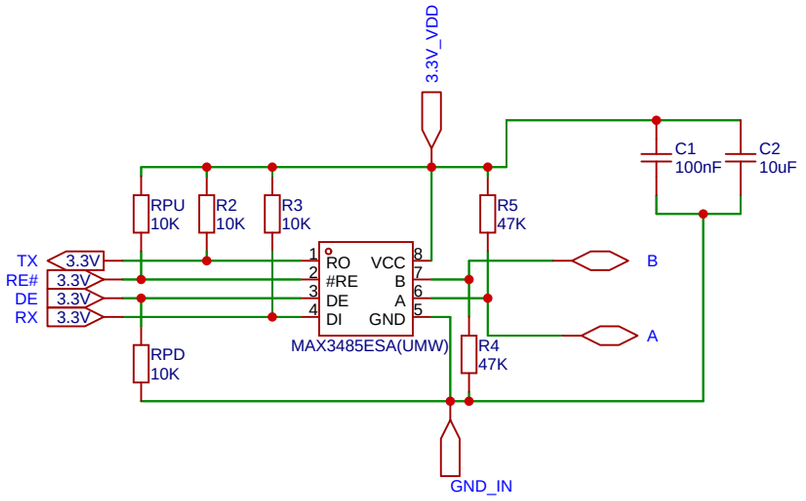

Schematic	RS485 to UART (3.3V)	Create at	2026-02-03
		Update at	2026-02-15
Board	RS485 to UART (3.3V)	Page	P1
Drawn		REVITA_LINK_v1	
Reviewed			
		Version	Size	Page 1 Total 1
EasyEDA		V1.0	A4	EasyEDA.com

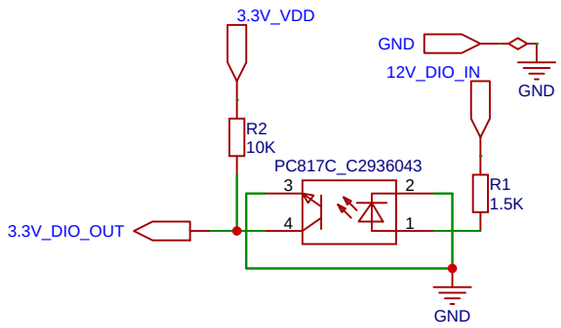

Schematic	12v dio to 3.3v dio_1	Create at	2026-02-04
		Update at	2026-02-15
Board	12v dio to 3.3v dio_1	Page	P1
Drawn	REVITA_LINK_v1		
Reviewed			
	Version	Size	Page 1 Total 1
EasyEDA	V1.0	A4	EasyEDA.com

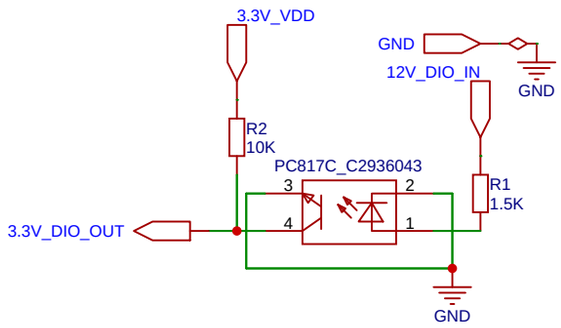

Schematic	12v dio to 3.3v dio	Create at	2026-02-04
		Update at	2026-02-15
Board	12v dio to 3.3v dio	Page	P1
Drawn		REVITA_LINK_v1	
Reviewed			
		Version	Size	Page 1 Total 1
EasyEDA		V1.0	A4	EasyEDA.com

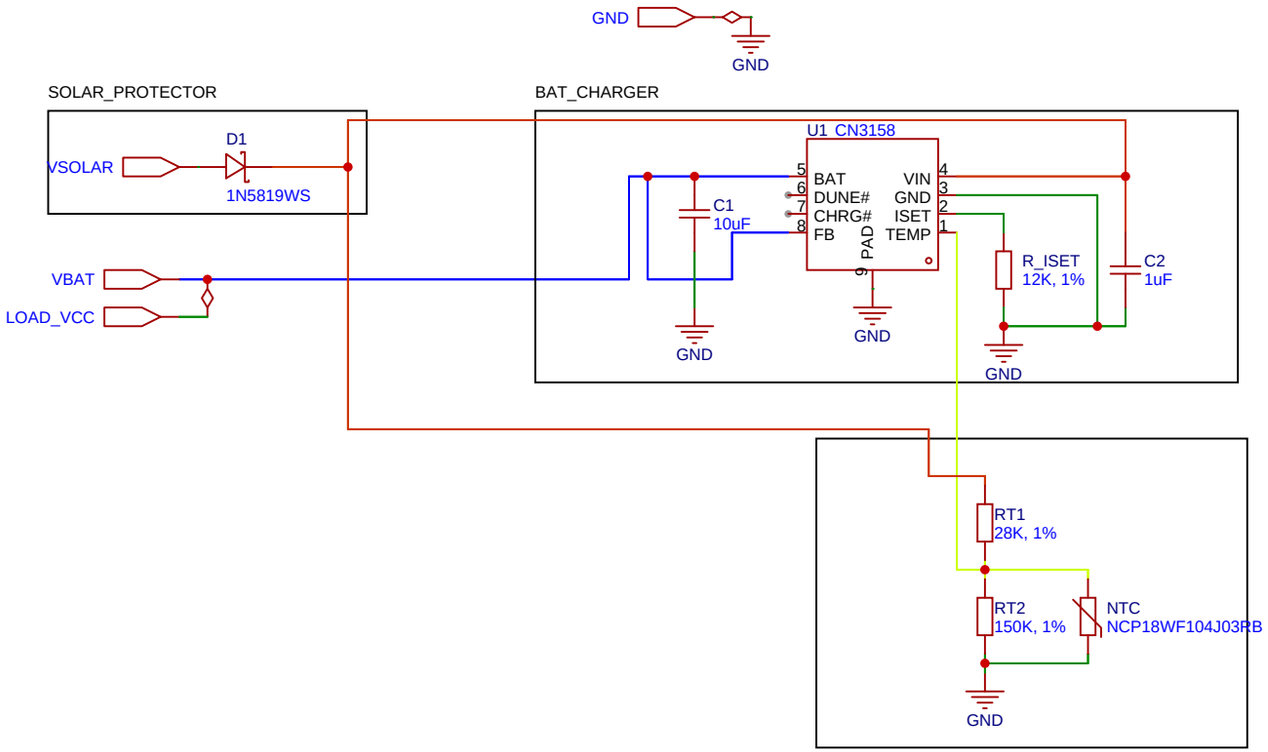

Schematic	SOLAR_CHARGER_1S	Create at	2026-02-03
		Update at	2026-02-15
Board	SOLAR_CHARGER_1S	Page	P1
Drawn		REVITA_LINK_v1	
Reviewed			
		Version	Size	Page 1 Total 1
EasyEDA		V1.0	A4	EasyEDA.com

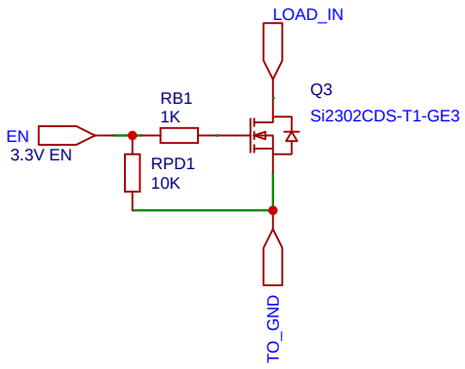

Schematic	12V-0.1A N-CHANNEL_1	Create at	2026-02-04
		Update at	2026-02-15
Board	12V-0.1A N-CHANNEL_1	Page	P1
Drawn	REVITA_LINK_v1		
Reviewed			
	Version	Size	Page 1 Total 1
EasyEDA	V1.0	A4	EasyEDA.com

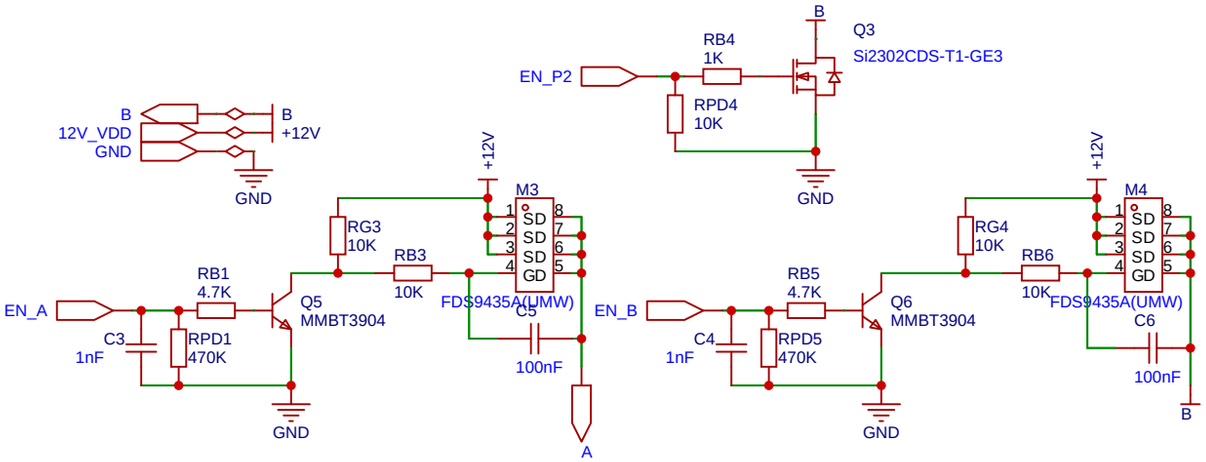

Schematic	3-Line-motor-control	Create at	2026-02-03
		Update at	2026-02-15
Board	3-Line-motor-control	Page	P1
Drawn	REVITA_LINK_v1		
Reviewed			
	Version	Size	Page 1 Total 1
EasyEDA	V1.0	A4	EasyEDA.com

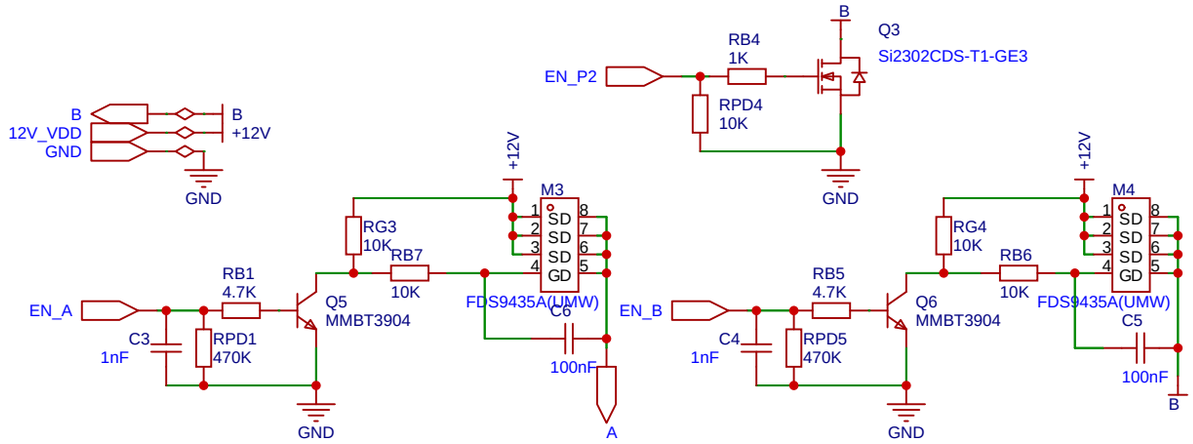

Schematic	3-Line-motor-control_1	Create at	2026-02-04
		Update at	2026-02-15
Board	3-Line-motor-control_1	Page	P1
Drawn		REVITA_LINK_v1	
Reviewed			
		Version	Size	Page 1 Total 1
EasyEDA		V1.0	A4	EasyEDA.com

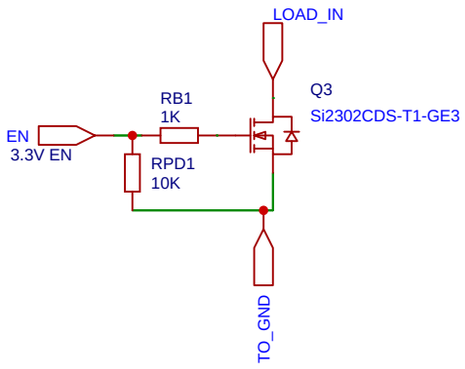

Schematic	12V-0.1A N-CHANNEL	Create at	2026-02-04
		Update at	2026-02-15
Board	12V-0.1A N-CHANNEL	Page	P1
Drawn	REVITA_LINK_v1		
Reviewed			
	Version	Size	Page 1 Total 1
EasyEDA	V1.0	A4	EasyEDA.com

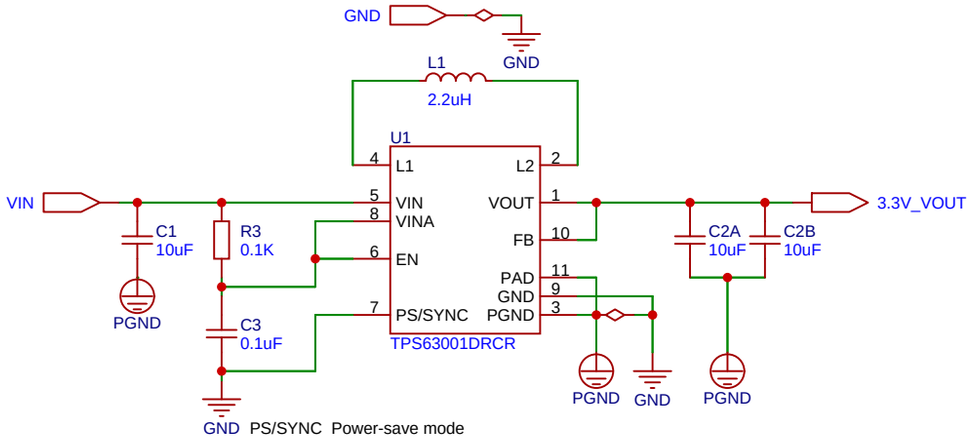

Schematic	3.3V_buck_boost	Create at	2026-02-03
		Update at	2026-03-11
Board	3.3V_buck_boost	Page	P1
Drawn		REVITA_LINK_v1	
Reviewed			
		Version	Size	Page 1 Total 1
EasyEDA		V1.0	A4	EasyEDA.com

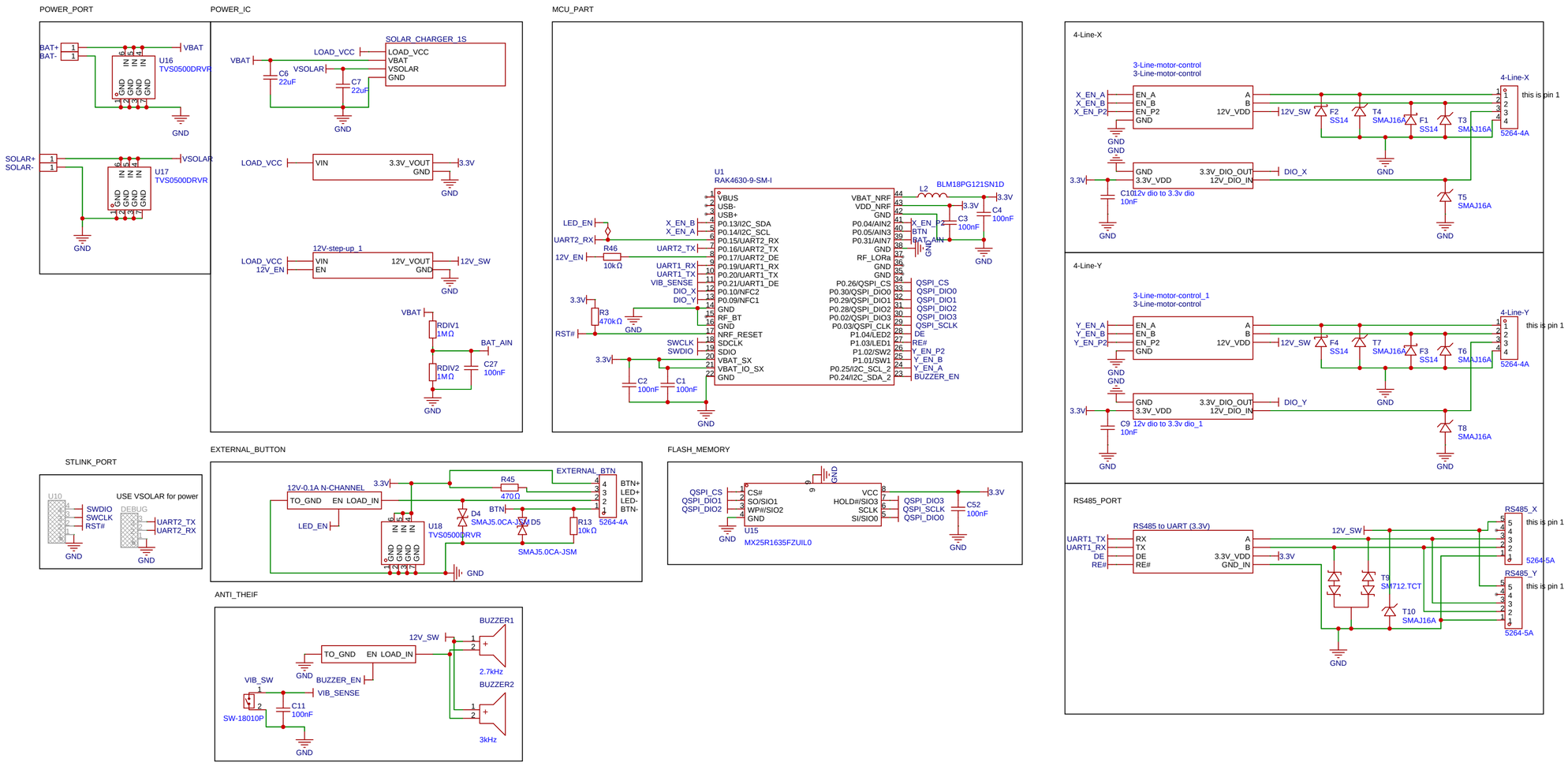

Schematic	Schematic1	Create at	2026-02-01
		Update at	2026-03-18
Board	main_board	Page	WHOLE_PART
Drawn	REVITA_LINK_v1		
Reviewed			
	Version	Size	Page 1 Total 1
EasyEDA	V1.0	A4	EasyEDA.com