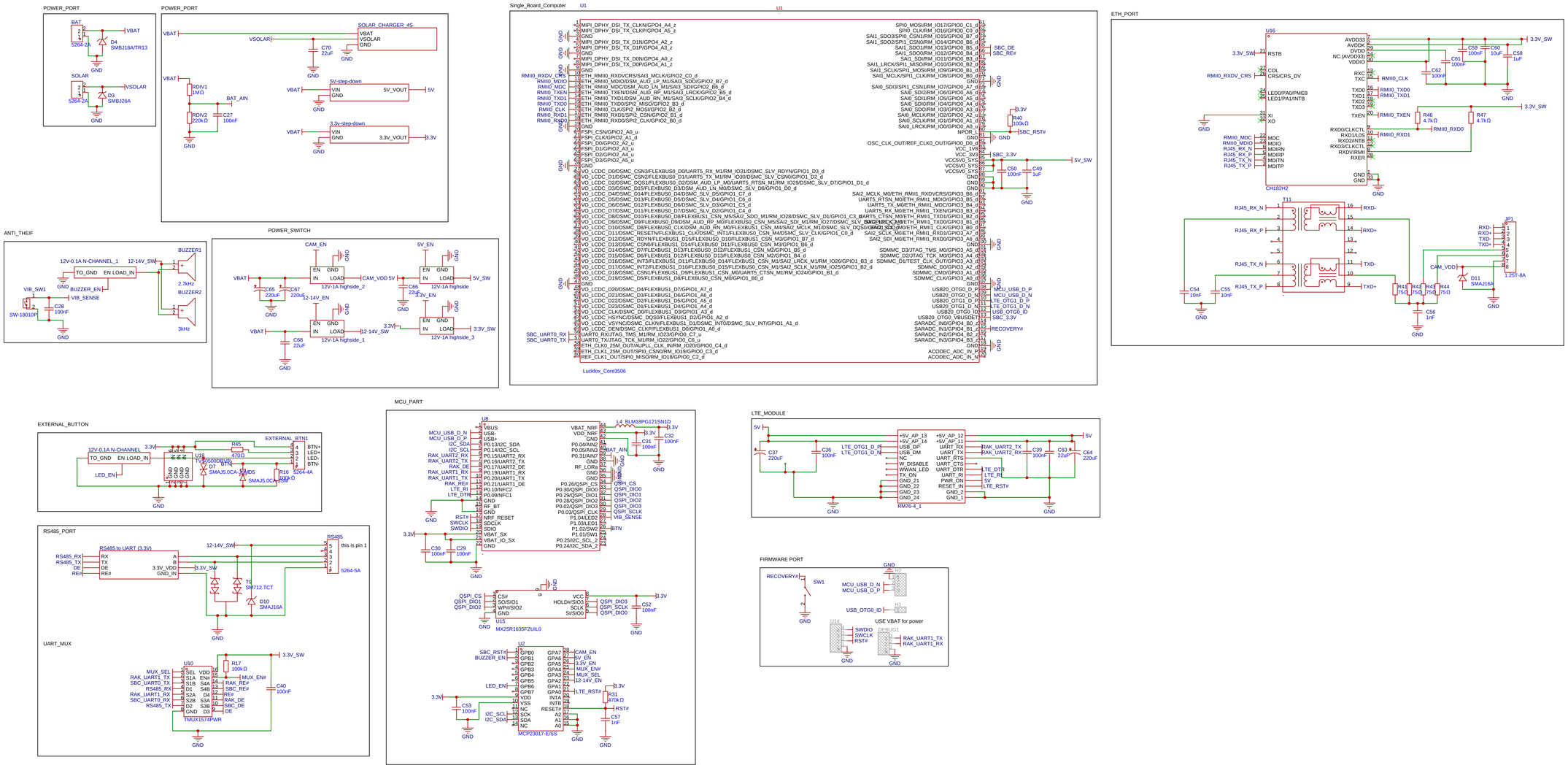

Schematic	Schematic1	Create at	2026-02-02
		Update at	2026-03-01
Board	Board1	Page	P1
Drawn	REVITA_TOWER_V1		
Reviewed			
	Version	Size	Page 1 Total 1
EasyEDA	V1.0	A4	EasyEDA.com

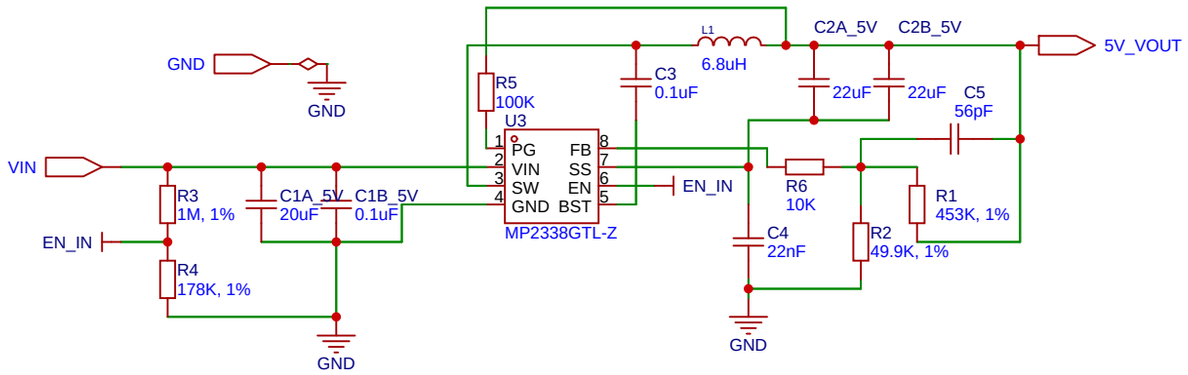

Schematic	5V-step-down	Create at	2026-02-06
		Update at	2026-03-10
Board	5V-step-down	Page	P1
Drawn	REVITA_TOWER_V1		
Reviewed			
	Version	Size	Page 1 Total 1
EasyEDA	V1.0	A4	EasyEDA.com

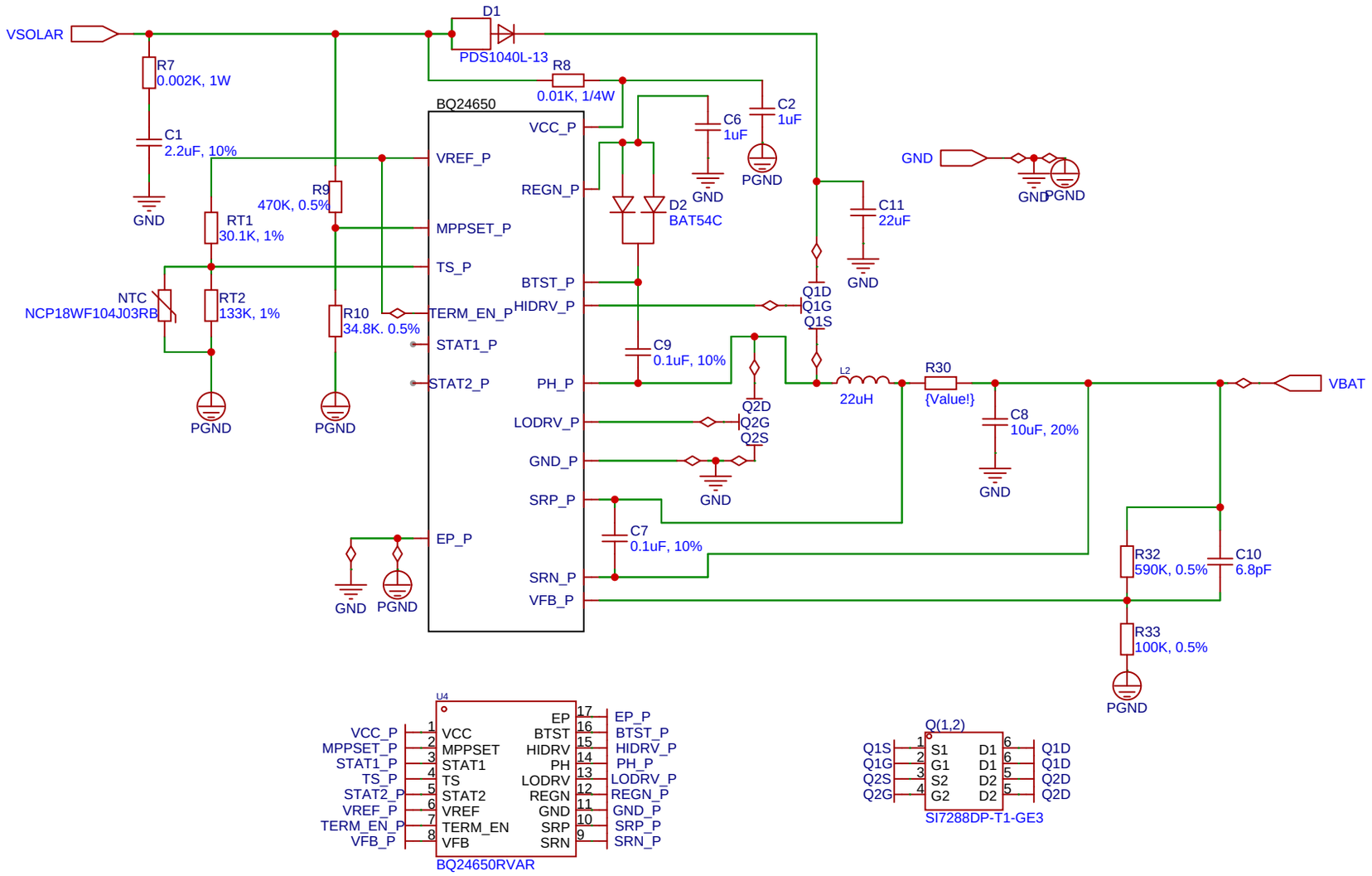

Schematic	SOLAR_CHARGER_4S	Create at	2026-02-06
		Update at	2026-2-15
Board	SOLAR_CHARGER_4S	Page	P1
Drawn		REVITA_TOWER_V1	
Reviewed			
		Version	Size	Page 1 Total 1
EasyEDA		V1.0	A4	EasyEDA.com

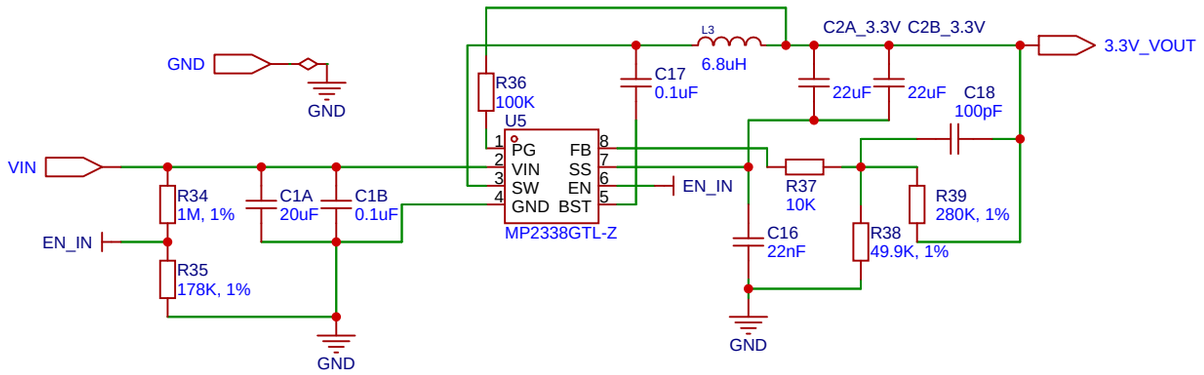

Schematic	3.3v-step-down	Create at	2026-02-06
		Update at	2026-02-17
Board	3.3v-step-down	Page	P1
Drawn		REVITA_TOWER_V1	
Reviewed			
		Version	Size	Page 1 Total 1
EasyEDA		V1.0	A4	EasyEDA.com

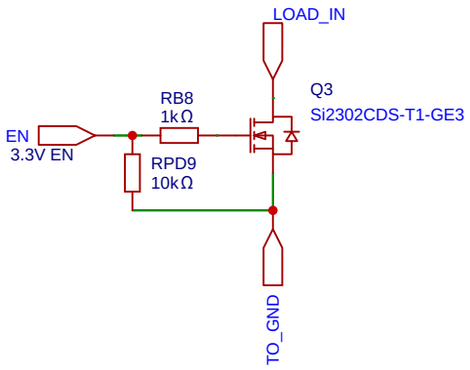

Schematic	12V-0.1A N-CHANNEL_1	Create at	2026-02-06
		Update at	2026-02-15
Board	12V-0.1A N-CHANNEL_1	Page	P1
Drawn	REVITA_TOWER_V1		
Reviewed			
		Version	Size	Page 1 Total 1
EasyEDA		V1.0	A4	EasyEDA.com

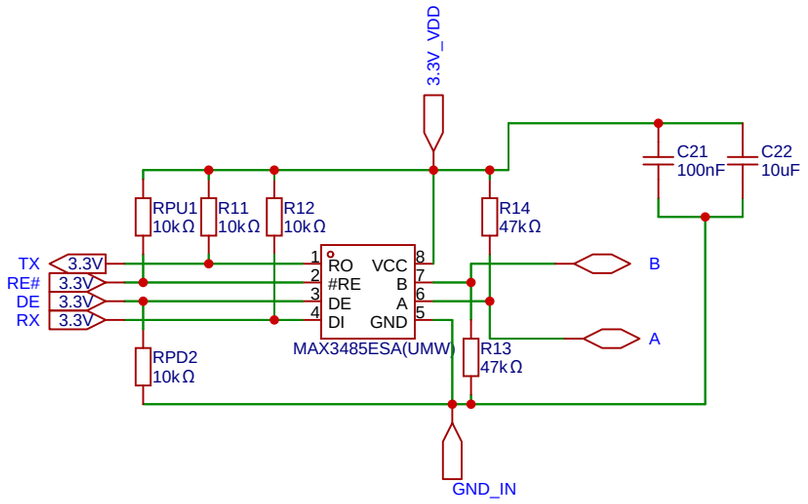

Schematic	RS485 to UART (3.3V)	Create at	2026-02-06
		Update at	2026-02-15
Board	RS485 to UART (3.3V)	Page	P1
Drawn	REVITA_TOWER_V1		
Reviewed			
		Version	Size	Page 1 Total 1
EasyEDA		V1.0	A4	EasyEDA.com

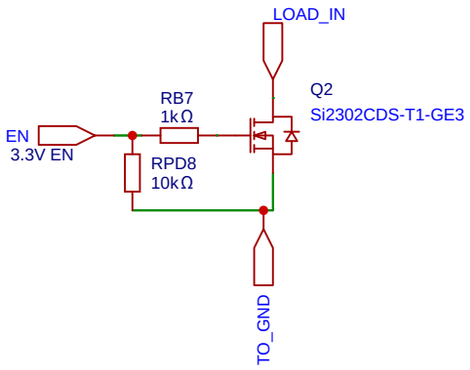

Schematic	12V-0.1A N-CHANNEL	Create at	2026-02-06
		Update at	2026-02-15
Board	12V-0.1A N-CHANNEL	Page	P1
Drawn	REVITA_TOWER_V1		
Reviewed			
	Version	Size	Page 1 Total 1
EasyEDA	V1.0	A4	EasyEDA.com

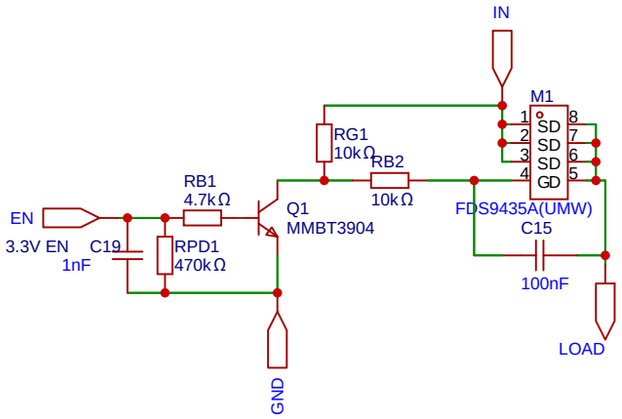

Schematic	12V-1A highside	Create at	2026-02-08
		Update at	2026-02-15
Board	5V-5A highside	Page	P1
Drawn	REVITA_TOWER_V1		
Reviewed			
	Version	Size	Page 1 Total 1
EasyEDA	V1.0	A4	EasyEDA.com

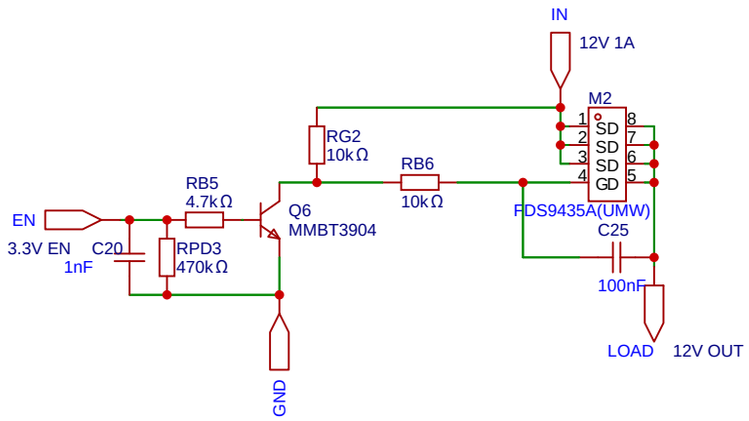

Schematic	12V-1A highside_1	Create at	2026-02-08
		Update at	2026-02-15
Board	12V-1A highside	Page	P1
Drawn	REVITA_TOWER_V1		
Reviewed			
		Version	Size	Page 1 Total 1
EasyEDA		V1.0	A4	EasyEDA.com

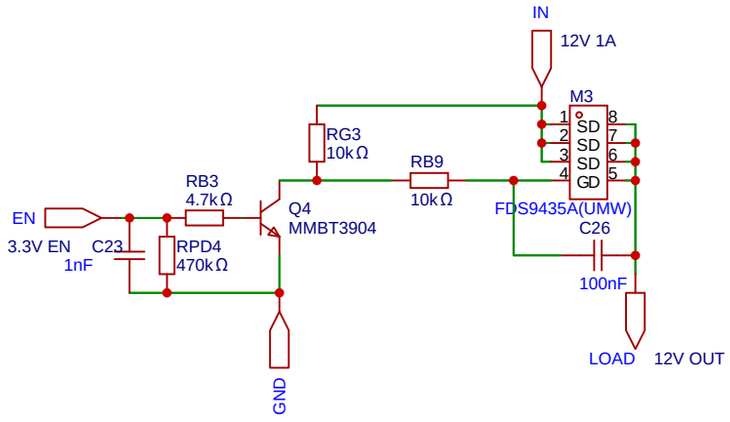

Schematic	12V-1A highside_2	Create at	2026-02-08
		Update at	2026-02-15
Board	12V-1A highside_1	Page	P1
Drawn	REVITA_TOWER_V1		
Reviewed			
		Version	Size	Page 1 Total 1
EasyEDA		V1.0	A4	EasyEDA.com

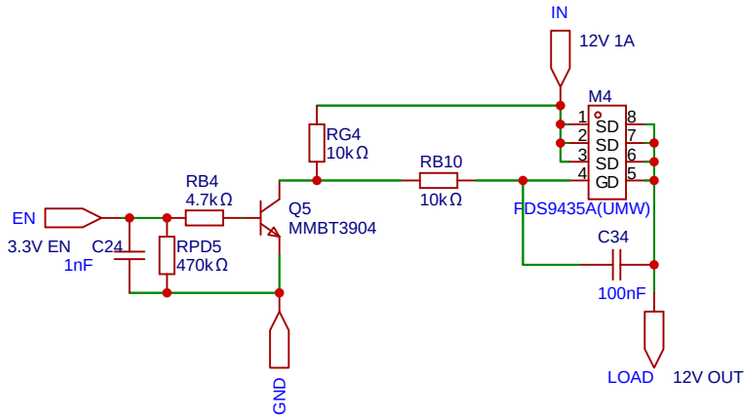

Schematic	12V-1A highside_3	Create at	2026-02-08
		Update at	2026-02-15
Board	12V-1A highside_2	Page	P1
Drawn	REVITA_TOWER_V1		
Reviewed			
	Version	Size	Page 1 Total 1
EasyEDA	V1.0	A4	EasyEDA.com

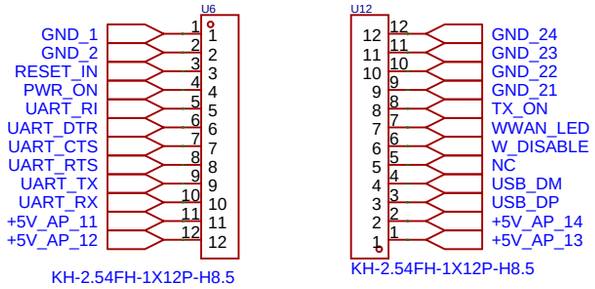

Schematic	RM76-4_1	Create at	2026-02-11
		Update at	2026-02-11
Board	RM76-4	Page	P1
Drawn	REVITA_TOWER_V1		
Reviewed			
	Version	Size	Page 1 Total 1
EasyEDA	V1.0	A4	EasyEDA.com