WisDM V1.8.2: Gateway alerts, performance notifications, easier checkout, and more. Read updates. X

RAK4631 WisBlock LPWAN Module Datasheet

Overview

Description

The **RAK4631** WisBlock Core module is a RAK4630 stamp module with an expansion PCB and connectors compatible with the RAK5005-O baseboard. It allows an easy way to access to the pins of the RAK4630 module in order to simplify development and testing processes.

The module itself comprises a RAK4630 as its main component. The RAK4630 is a combination of an nRF52840 MCU and an SX1262 LoRa chip, it features ultra-low power consumption of 2.0 uA during sleep mode, high LoRa output power up to 22 dBm during a transmission mode, and the BLE interface with output power up to 4 dBm.

The module complies with LoRaWAN 1.0.2 protocols, it also supports LoRa point-to-point communication.

The RF communication characteristic of the module (LoRa + BLE) makes it suitable for a variety of applications in the IoT field such as home automation, sensor networks, building automation, personal area networks applications (health/fitness sensors, and monitors, etc.).

> **NOTE**
>
> The **RAK4631** and **RAK4631-R** share common hardware and are 100% identical, but their firmware is different. **RAK4631** firmware is based on the Arduino BSP of the nRF52840 chip, whereas **RAK4631-R** firmware is based on RUI V3, giving you the flexibility to develop optimized firmware using the RUI3 APIs or via RUI3 AT commands .
>
> You can convert your **RAK4631** to **RAK4631-R** if you prefer RUI3 .

Features

- TCXO crystal for LoRa chip
- I/O ports: UART/I2C/GPIO/USB
- SPI pins and optional NFC interface are accessible using WisBlock IO module
- Temperature range: -40 °C to +85 °C
- Supply voltage: 2.0 ~ 3.6 V
- Low-Power Wireless Systems with 7.8 KHz to 500 KHz Bandwidth
- Ultra-Low Power Consumption 2.0 uA in sleep mode
- LoRa PA Boost mode with 22 dBm output power
- BLE5.0 (Tx power -20 to +4 dBm in 4dB steps)
- Serial Wire Debug (SWD) interface
- Module size: 20 × 30 mm
- Chipset: Nordic nRF52840, Semtech SX1262

Specifications

Overview

The overview covers the RAK4631 board overview and the mounting mechanics of the board into the baseboard.

Board Overview

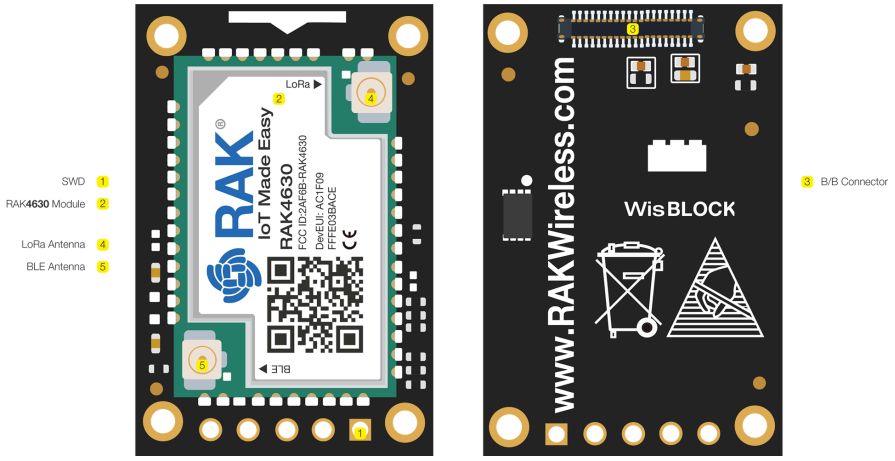

Figure 1: RAK4631 Overview

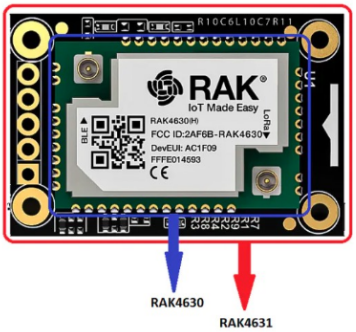

Figure 2: RAK4630 in RAK4631 WisBlock Core

Mounting Sketch

The RAK4631 module is designed to work with the RAK5005-O base board. Figure 3 shows how a RAK4631 module should be mounted on top of the RAK5005-O.

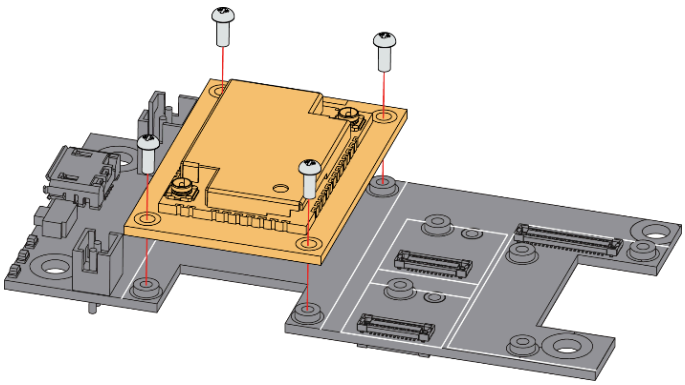

Figure 3: RAK4631 Mounting Sketch

Hardware

The hardware specification is categorized into four parts. It discusses the pinouts of the module and its corresponding functions and diagrams. It also covers the interfaces, RF, electrical, and mechanical parameters that include the tabular data of the functionalities and standard values of the RAK4631 Module.

Chipset

Vendor	Part number
Nordic, Semtech	nRF52840, SX1262

RF Characteristics

The RAK4631 module supports the LoRaWAN bands shown in table below. When buying a RAK4631 module, pay attention to the specified correct core module RAK4630 H/L for your region. H stands for high-frequency regions and L for low-frequency regions.

> **NOTE**
>
> Detailed information about the RAK4631 BLE and LoRa antenna can be found on the 863-870 MHz antenna datasheet or the 902-928 MHz antenna datasheet .

Module	Region	Frequency
RAK4631(L)	Europe	EU433
	China	CN470
RAK4631(H)	Europe	EU868
	North America	US915
	Australia	AU915
	Korea	KR920
	Asia	AS923-1/2/3/4
	India	IN865
	Russia	RU864

Electrical Characteristics

Power Consumption

Item	Power Consumption	Condition
Tx mode LoRa @20 dBm	12 5mA	LoRa @ PA_BOOST&BT sleep

Item	Power Consumption	Condition
Tx mode LoRa @17 dBm	92 mA	LoRa @ PA_BOOST&BT sleep
Tx mode BT@4 dBm	9 mA	BT Tx mode & Lora sleep
Rx mode LoRa @37.5 Kbps	17 mA	LoRa @ Receive mode &BT sleep
Rx mode BT@2 Mbps	11.5 mA	BT Rx mode & Lora sleep
Sleep mode	2.0 uA	LoRa&BT sleep

Absolute Maximum Ratings

Symbol	Description	Min.	Nom.	Max.	Unit
VBAT_SX	LoRa chip supply voltage	-0.5		3.9	V
VBAT_SX_IO	LoRa chip supply for I/O pins	-0.5		3.9	V
VDD_NRF	MCU power supply	-0.3		3.9	V
VBUS	USB supply voltage	-0.3		5.8	V
VBAT_NRF	MCU high voltage power supply	-0.3		5.8	V

Recommended Operating Conditions

Symbol	Description	Min.	Nom.	Max.	Unit
VBAT_SX	SX1262 supply voltage	2.0	3.3	3.7	V
VBAT_SX_IO	SX1262 supply for I/O pins	2.0	3.3	3.7	V
VDD_NRF	NRF52840 power supply	2.0	3.3	3.6	V

Symbol	Description	Min.	Nom.	Max.	Unit
VBUS	VBUS USB supply voltage	4.35	5.0	5.5	V
VBAT_NRF	NRF52840 high voltage power supply	2.5		5.5	V

Schematic Diagram

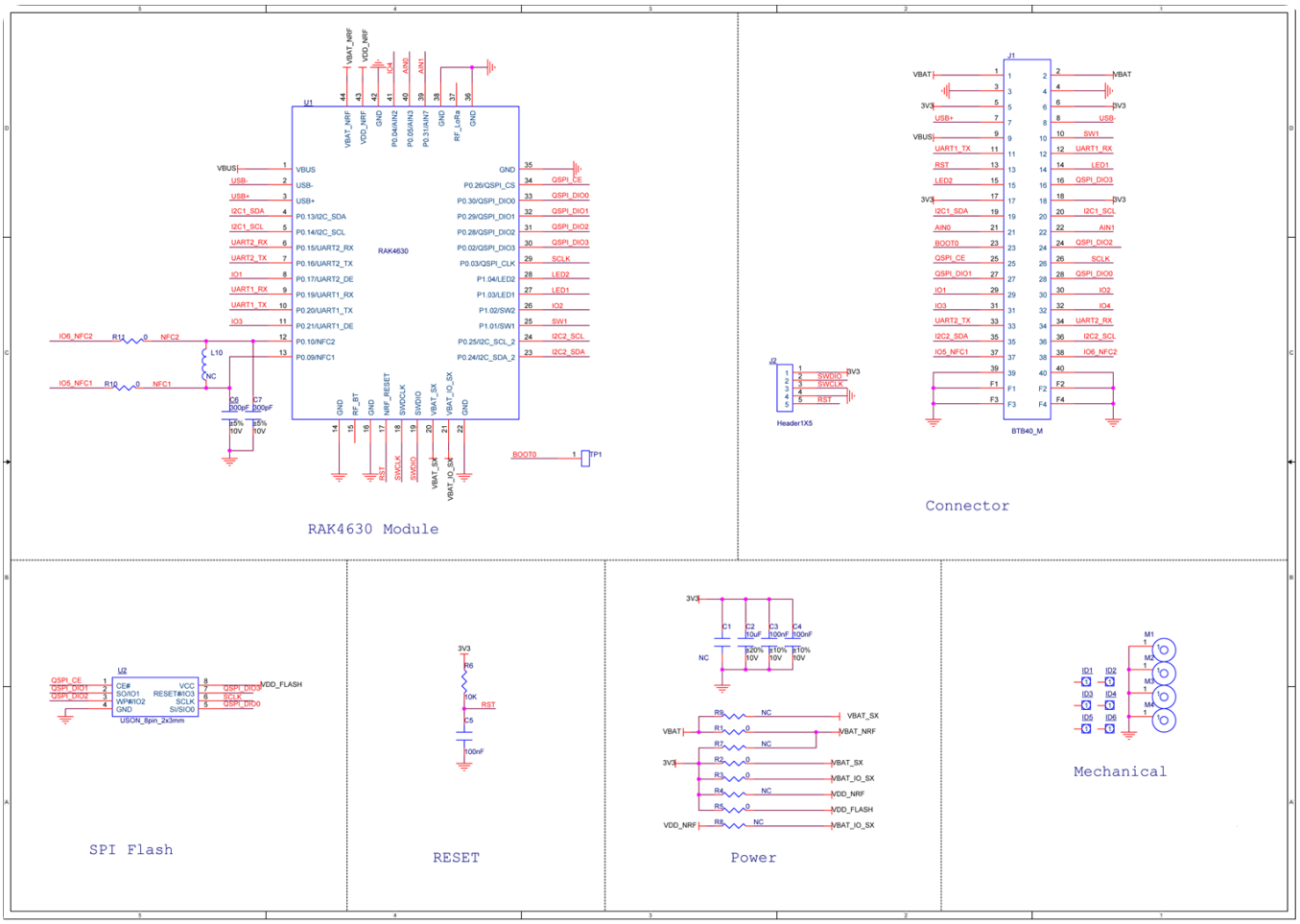

Figure 4: RAK4631 Schematic Diagram

- **WisConnector**: The breakout module allows the RAK4630 stamp module pinout to be transferred by the board-to-board WisConnector.
- **WisConnector Pin Order**: The pin order of the WisConnector is located in the bottom layer of the module.
- **Core Module**: The breakout module itself has a RAK4630 at its core, and it shows the core module pin and connection information. By default, the NFC function is disabled for conserve the low power characteristic.

- **SWD Interface**: The breakout module exposes a SWD debug interface. Additionally, the RST pin is used for resetting the core module RAK4630.

- **Power Up Automatic Reset**: The breakout module has a power-up automatic reset circuit, and the schematic shows the automatic reset mechanism. This module also can be reset though RAK5005-O reset pin.

Setup of the SX1262

Information to write custom firmware for the RAK4630. This shows the internal connection between the RAK4630 and required information when initializing the SX1262 LoRa Transceiver.

nRF52840 GPIO	SX1262 pin	function
P1.10	NSS	SPI NSS
P1.11	SCK	SPI CLK
P1.12	MOSI	SPI MOSI
P1.13	MISO	SPI MISO
P1.14	BUSY	BUSY signal
P1.15	DIO1	DIO1 event interrupt
P1.06	NRESET	NRESET manual reset of the SX1262

Important for successful SX1262 initialization:

- Setup DIO2 to control the antenna switch
- Setup DIO3 to control the TCXO power supply
- Setup the SX1262 to use it's DCDC regulator and not the LDO
- RAK4630 schematics show GPIO P1.07 connected to the antenna switch, but it should not be initialized, as DIO2 will do the control of the antenna switch

Mechanical Characteristics

Board Dimensions

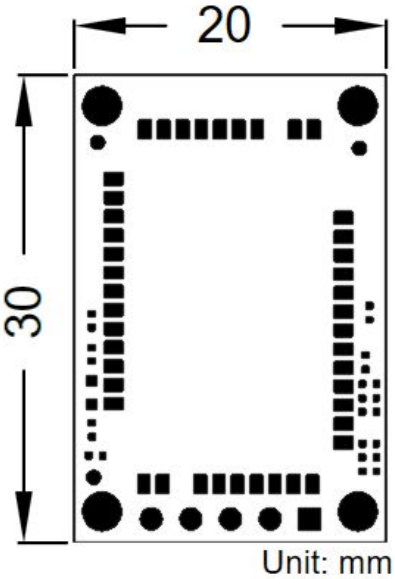

Figure 5: Mechanical Dimensions

WisConnector PCB Layout

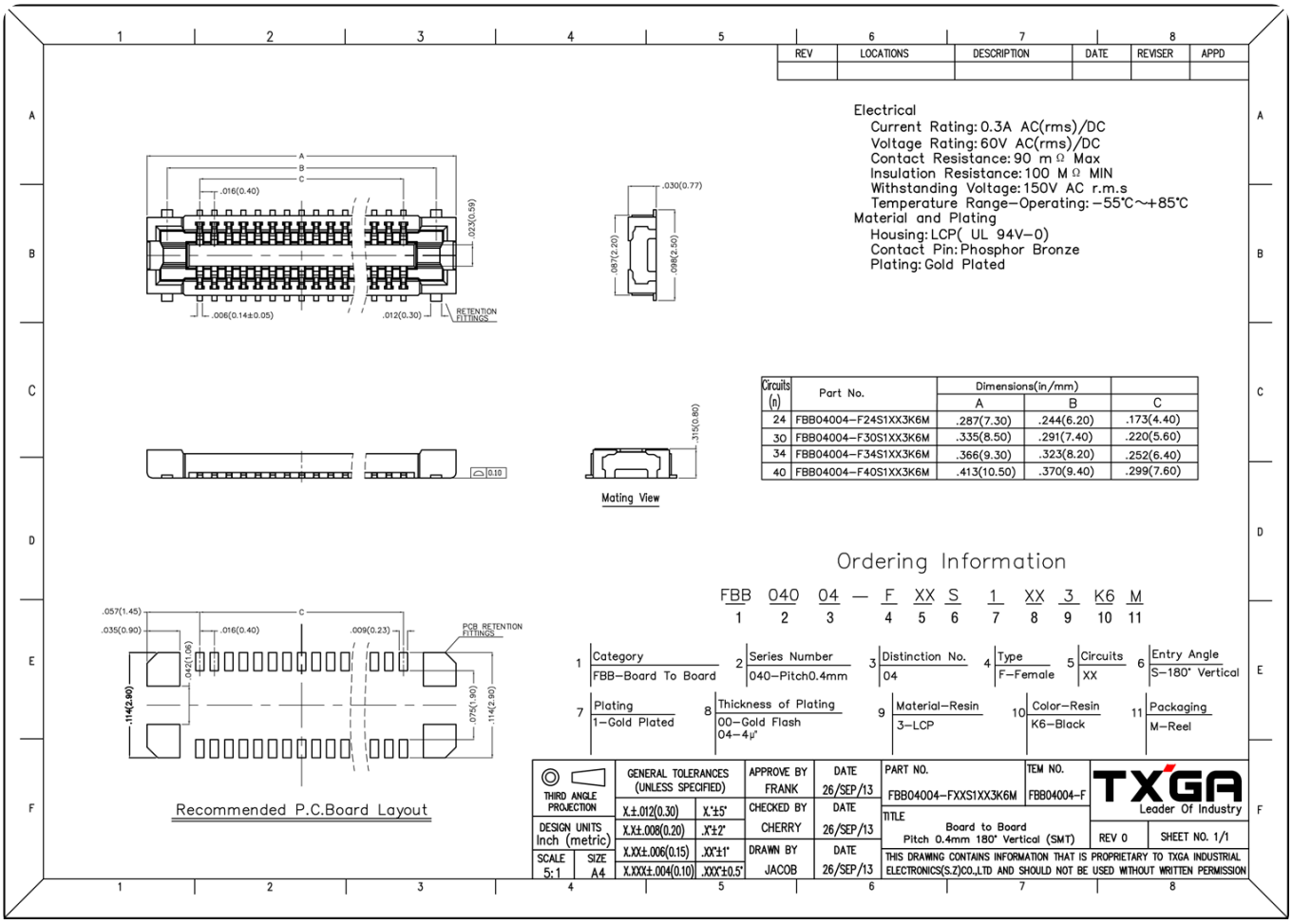

Figure 6: WisConnector PCB footprint and recommendations

Certification

Home « Amazon Sidewalk Starter Kit

LoRa® is a registered trademark or service mark of Semtech Corporation or its affiliates. LoRaWAN® is a licensed mark.

Copyright © 2014-2024 RAKwireless Technology Limited.
All rights reserved.