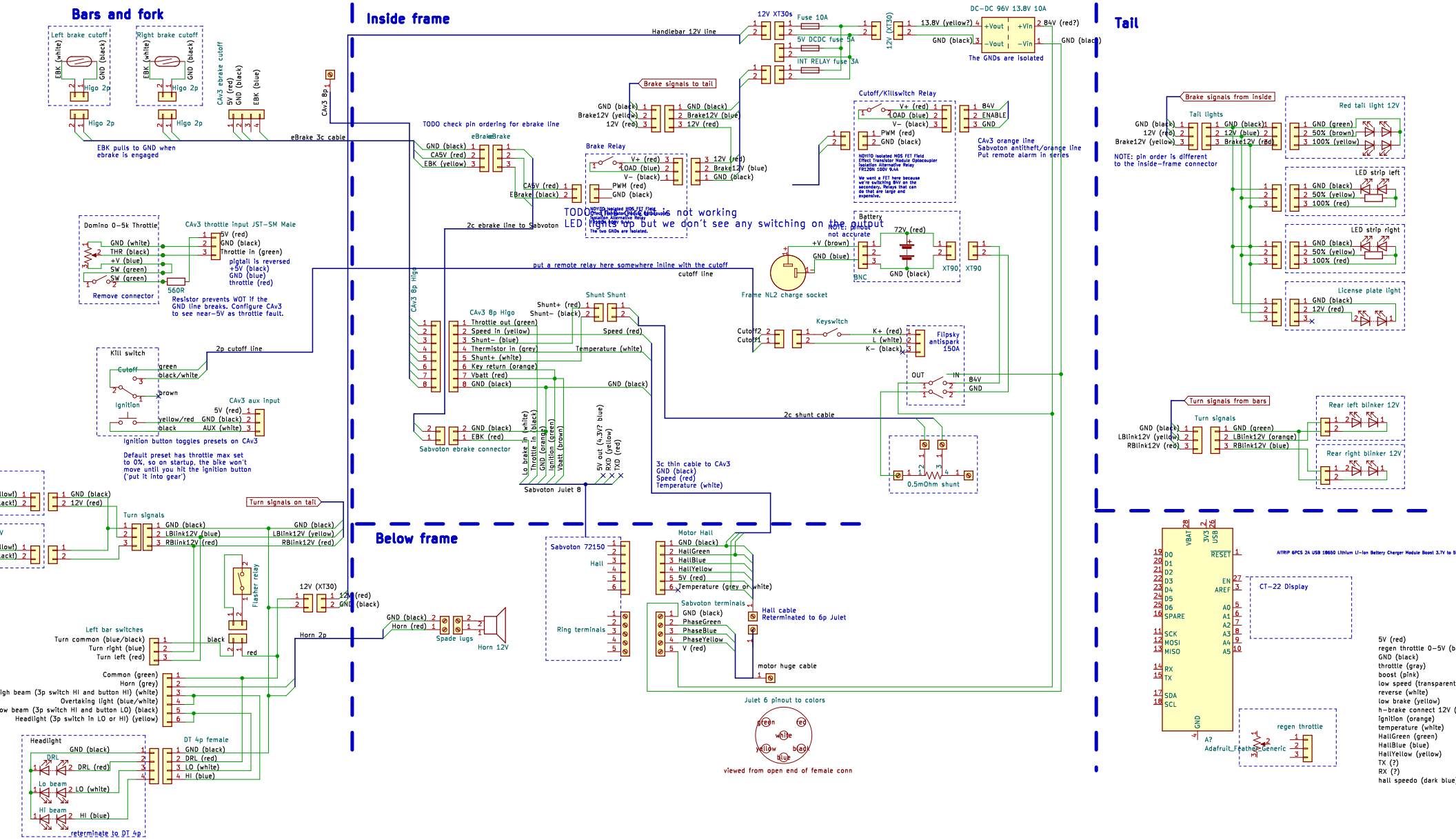
Bars and fork
Inside frame
Tail
Below frame
Left brake cutoff
Right brake cutoff
EBK (white)
GND (black)
Higo 2p
CAv3 ebrake cutoff
5V (red)
GND (black)
EBK (blue)
CAv3 8p
EBK pulls to GND when ebrake is engaged
eBrake 3c cable
Handlebar 12V line
12V XT30s
Fuse 10A
5V DCDC fuse 5A
INT RELAY fuse 3A
12V (XT30)
DC-DC 96V 13.8V 10A
+Vout
-Vout
+Vin
-Vin
13.8V (yellow?)
84V (red?)
GND (black)
The GNDs are isolated
Brake signals to tail
GND (black)
Brake12V (yellow)
12V (red)
Brake12V (blue)
TODO check pin ordering for ebrake line
eBrake
CA5V (red)
EBK (yellow)
Brake Relay
V+ (red)
LOAD (blue)
V- (black)
PWM (red)
GND (black)
NOVITO Isolated MOS FET Field Effect Transistor Module Optocoupler Isolation Alternative Relay FR120N 100V 9.4A
The two GNDs are isolated.
Cutoff/Killswitch Relay
84V
ENABLE
CAv3 orange line
Sabvoton antitheft/orange line
Put remote alarm in series
NOVITO Isolated MOS FET Field Effect Transistor Module Optocoupler Isolation Alternative Relay FR120N 100V 9.4A
We want a FET here because we're switching 84V on the secondary. Relays that can do that are large and expensive.
TODO: this is not working
LED lights up but we don't see any switching on the output
Domino 0-5k Throttle
GND (white)
THR (black)
+V (blue)
5W (green)
5W (green)
Remove connector
CAv3 throttle input JST-SM Male
5V (red)
GND (black)
Throttle in (green)
pigtail is reversed
+5V (black)
GND (blue)
throttle (red)
560R
Resistor prevents WOT if the GND line breaks. Configure CAv3 to see near-5V as throttle fault.
2c ebrake line to Sabvoton
CAv3 8p Higo
put a remote relay here somewhere inline with the cutoff
cutoff line
Battery
72V (red)
Note: probably not accurate
+V (brown)
GND (blue)
BNC
GND (black)
XT90
Frame NL2 charge socket
Shunt Shunt
Shunt+ (red)
Shunt- (black)
Speed (red)
Temperature (white)
GND (black)
Throttle out (green)
Speed in (yellow)
Shunt- (blue)
Thermistor in (grey)
Shunt+ (white)
Key return (orange)
Vbatt (red)
GND (black)
Cutoff2
Cutoff1
Keyswitch
K+ (red)
L (white)
K- (black)
Filipsky antispark 150A
OUT
IN
84V
GND
2c shunt cable
0.5mOhm shunt
Kill switch
Cutoff
green
black/white
brown
Ignition
2p cutoff line
CAv3 aux input
5V (red)
GND (black)
AUX (white)
yellow/red
black
Ignition button toggles presets on CAv3
Default preset has throttle max set to 0%, so on startup, the bike won't move until you hit the ignition button ('put it into gear')
Sabvoton ebrake connector
GND (black)
EBK (red)
Lo brake in (white)
Throttle in (black)
GND (orange)
Ignition (green)
Vbatt (brown)
5V out (4.3V? blue)
RXD (yellow)
TXD (red)
Sabvoton Julet 8
3c thin cable to CAv3
GND (black)
Speed (red)
Temperature (white)
Brake signals from inside
Tail lights
GND (black)
12V (red)
Brake12V (yellow)
Brake12V (red)
NOTE: pin order is different to the inside-frame connector
Red tail light 12V
GND (green)
50% (brown)
100% (yellow)
LED strip left
GND (black)
50% (yellow)
100% (red)
LED strip right
License plate light
12V (red)
Turn signals from bars
Turn signals
LBlink12V (yellow)
RBlink12V (red)
LBlink12V (orange)
RBlink12V (blue)
Rear left blinker 12V
Rear right blinker 12V
Turn signals
LBlink12V (blue)
RBlink12V (red)
Turn signals on tail
Flasher relay
12V (XT30)
Left bar switches
Turn common (blue/black)
Turn right (blue)
Turn left (red)
black
red
Common (green)
Horn (grey)
Overtaking light (blue/white)
Headlight (3p switch in LO or HI) (yellow)
Horn 2p
Spade lugs
Horn 12V
Headlight
DRL
Lo beam
HI beam
DT 4p female
GND (black)
DRL (red)
LO (white)
HI (blue)
reterminate to DT 4p
Sabvoton 72150
Hall
Ring terminals
Motor Hall
HallGreen
HallBlue
HallYellow
5V (red)
Temperature (grey or white)
Sabvoton terminals
PhaseGreen
PhaseBlue
PhaseYellow
V (red)
Hall cable
Reterminated to 6p Julet
motor huge cable
Julet 6 pinout to colors
green
red
white
yellow
black
blue
viewed from open end of female conn
AITRIP 6PCS 2A USB 18650 Lithium Li-Ion Battery Charger Module Boost 3.7V to 5
CT-22 Display
regen throttle
A?
Adafruit_Feather_Generic
5V (red)
regen throttle 0-5V (b
GND (black)
throttle (gray)
boost (pink)
low speed (transparent
reverse (white)
low brake (yellow)
h-brake connect 12V (
Ignition (orange)
temperature (white)
HallGreen (green)
HallBlue (blue)
HallYellow (yellow)
TX (?)
RX (?)
hall speedo (dark blue