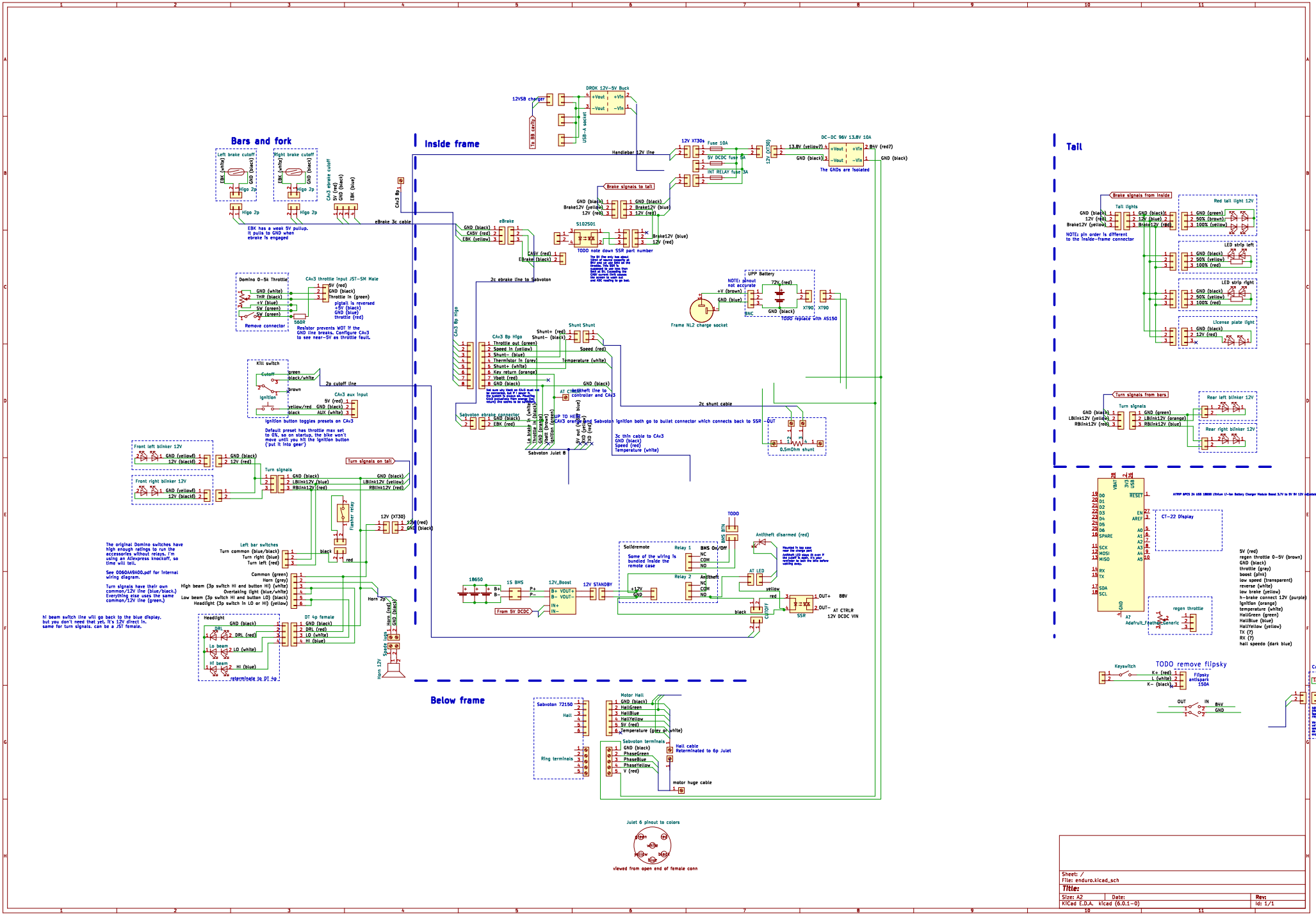
Bars and fork
Inside frame
Tail
Below frame
Left brake cutoff
Right brake cutoff
EBK (white)
GND (black)
Higo 2p
CAv3 ebrake cutoff
5V (red)
GND (black)
EBK (blue)
CAv3 8p
eBrake 3c cable
EBK has a weak 5V pullup.
It pulls to GND when
ebrake is engaged
Domino 0-5k Throttle
GND (white)
THR (black)
+V (blue)
5V (green)
5V (green)
Remove connector
CAv3 throttle input JST-SM Male
5V (red)
GND (black)
Throttle in (green)
pigtail is reversed
+5V (black)
GND (blue)
throttle (red)
560R
Resistor prevents WOT if the
GND line breaks. Configure CAv3
to see near-5V as throttle fault.
Kill switch
Cutoff
Ignition
green
black/white
brown
2p cutoff line
CAv3 aux input
5V (red)
GND (black)
yellow/red
black
AUX (white)
ignition button toggles presets on CAv3
Default preset has throttle max set
to 0%, so on startup, the bike won't
move until you hit the ignition button
('put it into gear')
Front left blinker 12V
GND (yellow)
12V (black)
GND (black)
12V (red)
Front right blinker 12V
GND (yellow)
12V (black)
Turn signals
GND (black)
LBlink12V (blue)
RBlink12V (red)
Turn signals on tail
GND (black)
LBlink12V (yellow)
RBlink12V (red)
Flasher relay
12V (XT30)
12V (red)
GND (black)
The original Domino switches have
high enough ratings to run the
accessories without relays. I'm
using an Aliexpress knockoff, so
time will tell.
See 0060A49A00.pdf for internal
wiring diagram.
Turn signals have their own
common/12V line (blue/black.)
Everything else uses the same
common/12V line (green.)
Hi beam switch line will go back to the blue display,
but you don't need that yet. It's 12V direct in.
same for turn signals. can be a JST female.
Left bar switches
Turn common (blue/black)
Turn right (blue)
Turn left (red)
Common (green)
Horn (grey)
High beam (3p switch HI and button HI) (white)
Overtaking light (blue/white)
Low beam (3p switch HI and button LO) (black)
Headlight (3p switch in LO or HI) (yellow)
black
red
Horn 2p
Horn (red)
GND (black)
Horn 12V
Headlight
GND (black)
DRL
DRL (red)
Lo beam
LO (white)
HI beam
HI (blue)
DT 4p female
GND (black)
DRL (red)
LO (white)
HI (blue)
terminate to DT 4p
12V5A charger
To BB cells
DROK 12V-5V Buck
+Vout
-Vout
+Vin
-Vin
USB-A socket
Handlebar 12V line
12V XT30s
Fuse 10A
5V DCDC fuse 5A
INT RELAY fuse 5A
12V (XT30)
DC-DC 96V 13.8V 10A
13.8V (yellow?)
GND (black)
84V (red?)
GND (black)
The GNDs are isolated
Brake signals to tail
GND (black)
Brake12V (yellow)
12V (red)
GND (black)
Brake12V (blue)
12V (red)
S102S01
TODO note down SSR part number
The 5V Pin only has about
10mA of source capacity at
most, so don't try to use it
for much. The SSR is
supposed to use some kind
of 5V input, but I think
CAN current from the pin
the output is wired out
and VDC reading is go bad.
Brake12V (blue)
12V (red)
eBrake
GND (black)
CA6V (red)
EBK (yellow)
CA5V (red)
EBrake (black)
2c ebrake line to Sabvoton
UPP Battery
NOTE: pinout
not accurate
+V (brown)
GND (blue)
BNC
72V (red)
GND (black)
XT90
XT90
TODO replace with AS150
Frame NL2 charge socket
CAv3 8p Higo
Throttle out (green)
Speed In (yellow)
Shunt- (blue)
Thermistor In (grey)
Shunt+ (white)
Key return (orange)
Vbatt (red)
GND (black)
Shunt Shunt
Shunt+ (red)
Shunt- (black)
Speed (red)
Temperature (white)
GND (black)
AT CTRLR
Antitheft line to
controller and CAv3
2c shunt cable
Sabvoton ebrake connector
GND (black)
EBK (red)
Sabvoton Juiet 8
UP TO HERE
CAv3 orange and Sabvoton ignition both go to bullet connector which connects back to SSR
3c thin cable to CAv3
GND (black)
Speed (red)
Temperature (white)
-OUT
0.5mOhm shunt
Solldremote
Some of the wiring is
bundled inside the
remote case
Relay 1
NC
COM
NO
BMS On/Off
Relay 2
Antitheft
NC
COM
NO
TODO
BMS BTN
Antitheft disarmed (red)
Mounted in bag case
near the charge port.
Antitheft LED wires to run
to the back of the bike and
resistor to sub the bike before
walking away.
AT LED
yellow
red
black
CUTOFF
SSR
OUT+
OUT-
84V
AT CTRLR
12V DCDC VIN
18650
1S BMS
B+
B-
P+
P-
From 5V DCDC
12V_Boost
B+ VOUT+
B- VOUT-
IN+
IN-
12V STANDBY
+12V
GND
Motor Hall
GND (black)
HallGreen
HallBlue
HallYellow
5V (red)
Temperature (grey or white)
Sabvoton 72150
Hall
Ring terminals
Sabvoton terminals
GND (black)
PhaseGreen
PhaseBlue
PhaseYellow
V (red)
Hall cable
Reterminated to 6p Juiet
motor huge cable
Juiet 6 pinout to colors
viewed from open end of female conn
Brake signals from inside
Tail lights
GND (black)
12V (red)
Brake12V (yellow)
NOTE: pin order is different
to the inside-frame connector
GND (black)
12V (blue)
Brake12V (red)
Red tail light 12V
GND (green)
50% (brown)
100% (yellow)
LED strip left
GND (black)
50% (yellow)
100% (red)
LED strip right
GND (black)
50% (yellow)
100% (red)
License plate light
GND (black)
12V (red)
Turn signals from bars
Turn signals
GND (black)
LBlink12V (yellow)
RBlink12V (red)
GND (green)
LBlink12V (orange)
RBlink12V (blue)
Rear left blinker 12V
Rear right blinker 12V
ESP32 DEV
3V3
VBAT
USB
D0
D1
D2
D3
D4
D5
D6
SPARE
SCK
MOSI
MISO
RX
TX
SDA
SCL
RESET
EN
AREF
A0
A1
A2
A3
A4
A5
GND
A7
Adafruit_Feather_Generic
CT-22 Display
regen throttle
Generic
5V (red)
regen throttle 0-5V (brown)
GND (black)
throttle (grey)
boost (pink)
low speed (transparent)
reverse (white)
low brake (yellow)
h-brake connect 12V (purple)
Ignition (orange)
temperature (white)
HallGreen (green)
HallBlue (blue)
HallYellow (yellow)
TX (?)
RX (?)
hall speedo (dark blue)
Keyswitch
K+ (red)
L (white)
K- (black)
TODO remove flipsky
Flipsky
antispark
150A
OUT
IN
84V
GND
Cutoff/Ki
PW
GND
Sheet: /
File: enduro.kicad_sch
Title:
Size: A2
Date:
Rev:
KiCad E.D.A. kicad (6.0.1-0)
Id: 1/1