EM3566 Block Diagram

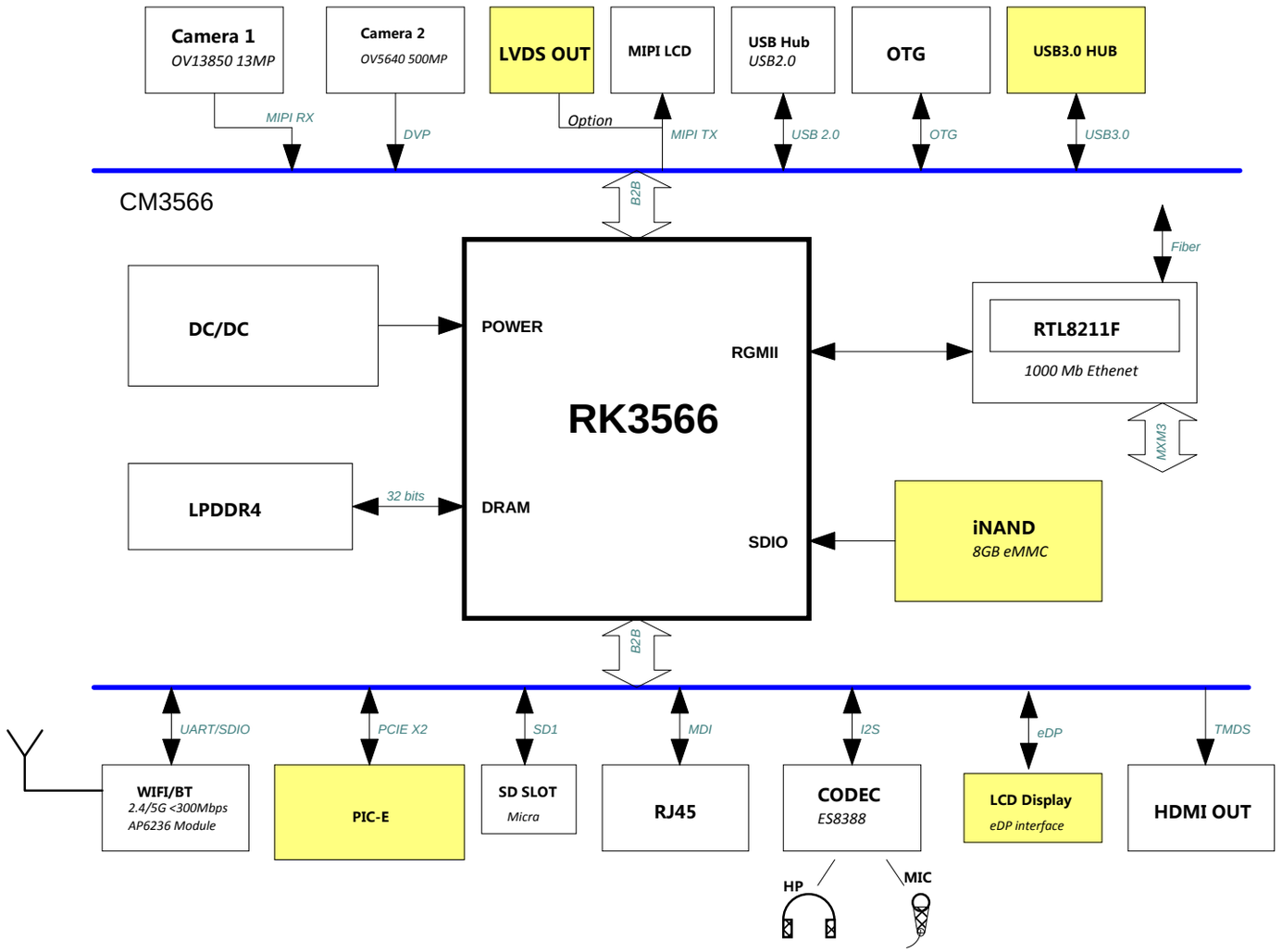

Boardcon Confidential

Boardcon Inc Room702-710, XinAn Business Building, 45Zone, BaoAn District,Shenzhen China +86-755-27571591

Title: block diagram			
Size: C	Document Number: EM3566	Drawn: Yhg	Rev: 3
Date: Friday, November 03, 2023		Sheet 1 of 14	

RK3566I2C MAP

Port	Pin name	Domain	Bus name	Pull-up voltage	Slave Device	Slave Addr (MS 7Bits)	Note	Slave Bus Capability
			I2C_SDA_HDMI I2C_SCL_HDMI				HDMI	
I2C2				VCC1V8_DVP			Camera	
I2C1				3V3			Touch	

Boardcon Confidential

Boardcon Inc. Room702-710, XinAn Business Building, 45Zone, BaoAn District,Shenzhen China +86-755-27571591

Title: I2C Map

Size: A4 | Document Number: EM3566 | Drawn: Yhg | Rev: 3

Date: Friday, November 03, 2023 | Sheet 2 of 14

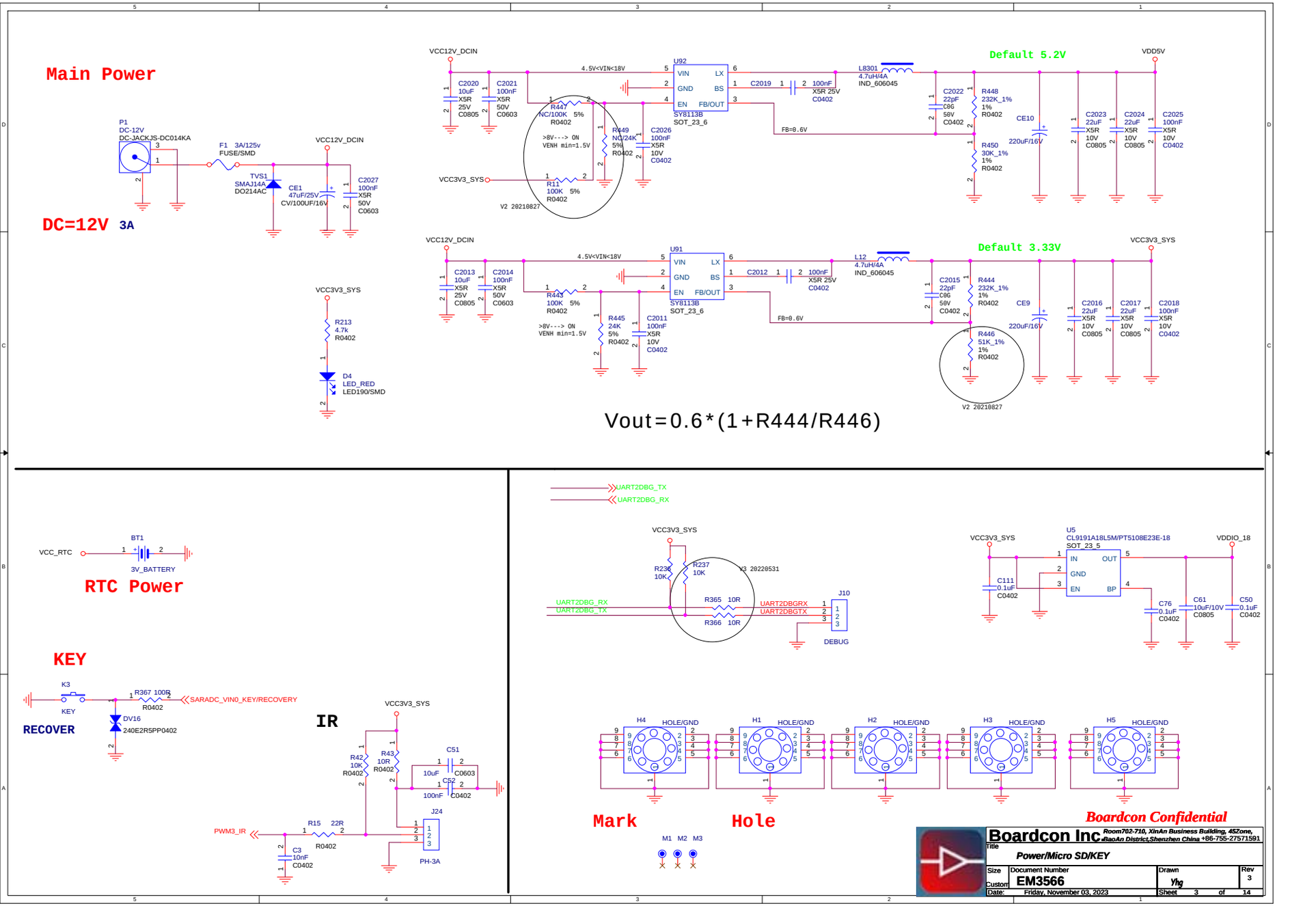
Main Power
P1
DC-12V
DC-JACKJS-DC014KA
F1 3A/125v
FUSE/SMD
VCC12V_DCIN
TVS1
SMAJ14A
DO214AC
CE1
47uF/25V
CV/100UF/16V
C2027
100nF
X5R
50V
C0603
DC=12V 3A
VCC3V3_SYS
R213
4.7k
R0402
D4
LED_RED
LED190/SMD
VCC12V_DCIN
C2020
10uF
X5R
25V
C0805
C2021
100nF
X5R
50V
C0603
4.5V<VIN<18V
U92
VIN
GND
EN
LX
BS
FB/OUT
SY8113B
SOT_23_6
R447
NC/100K 5%
R0402
>8V---> ON
VENH min=1.5V
R449
NC/24K
5%
R0402
C2026
100nF
X5R
10V
C0402
VCC3V3_SYS
R11
100K 5%
R0402
V2 20210827
C2019
100nF
X5R 25V
C0402
FB=0.6V
L8301
4.7uH/4A
IND_606045
Default 5.2V
VDD5V
C2022
22pF
C0G
50V
C0402
R448
232K_1%
1%
R0402
R450
30K_1%
1%
R0402
CE10
220uF/16V
C2023
22uF
X5R
10V
C0805
C2024
22uF
X5R
10V
C0805
C2025
100nF
X5R
10V
C0402
VCC12V_DCIN
C2013
10uF
X5R
25V
C0805
C2014
100nF
X5R
50V
C0603
4.5V<VIN<18V
U91
VIN
GND
EN
LX
BS
FB/OUT
SY8113B
SOT_23_6
R443
100K 5%
R0402
>8V---> ON
VENH min=1.5V
R445
24K
5%
R0402
C2011
100nF
X5R
10V
C0402
C2012
100nF
X5R 25V
C0402
FB=0.6V
L12
4.7uH/4A
IND_606045
Default 3.33V
VCC3V3_SYS
C2015
22pF
C0G
50V
C0402
R444
232K_1%
1%
R0402
R446
51K_1%
1%
R0402
V2 20210827
CE9
220uF/16V
C2016
22uF
X5R
10V
C0805
C2017
22uF
X5R
10V
C0805
C2018
100nF
X5R
10V
C0402
Vout=0.6*(1+R444/R446)
VCC_RTC
BT1
3V_BATTERY
RTC Power
KEY
K3
KEY
R367 100R
R0402
SARADC_VIN0_KEY/RECOVERY
RECOVER
DV16
240E2R5PP0402
IR
VCC3V3_SYS
R42
10K
R0402
R43
10R
R0402
C51
10uF
C0603
C52
100nF
C0402
J24
PWM3_IR
R15
22R
R0402
C3
10nF
C0402
PH-3A
UART2DBG_TX
UART2DBG_RX
VCC3V3_SYS
R236
10K
R237
10K
V3 20220531
UART2DBG_RX
UART2DBG_TX
R365 10R
R366 10R
UART2DBGRX
UART2DBGTX
J10
DEBUG
VCC3V3_SYS
U5
CL9191A18L5M/PT5108E23E-18
SOT_23_5
IN
GND
EN
OUT
BP
VDDIO_18
C111
0.1uF
C0402
C76
0.1uF
C0402
C61
10uF/10V
C0805
C50
0.1uF
C0402
H4
HOLE/GND
H1
HOLE/GND
H2
HOLE/GND
H3
HOLE/GND
H5
HOLE/GND
Mark
Hole
M1 M2 M3
Boardcon Confidential
Boardcon Inc
Room702-710, XinAn Business Building, 45Zone, BaoAn District,Shenzhen China +86-755-27571591
Title
Power/Micro SD/KEY
Size
Document Number
EM3566
Drawn
Yhg
Rev
3
Custom
Date:
Friday, November 03, 2023
Sheet 3 of 14

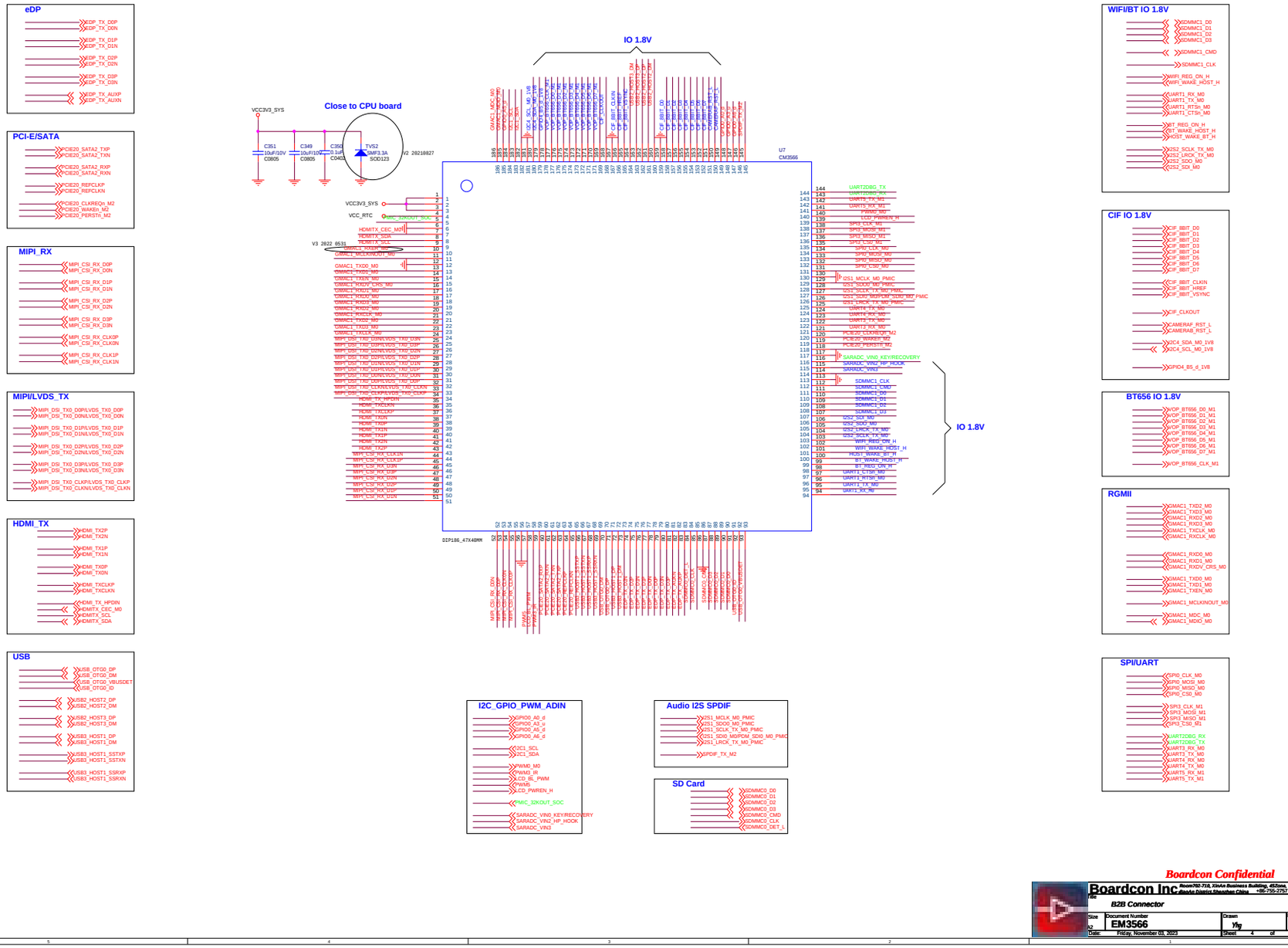
eDP
EDP_TX_D0P
EDP_TX_D0N
EDP_TX_D1P
EDP_TX_D1N
EDP_TX_D2P
EDP_TX_D2N
EDP_TX_D3P
EDP_TX_D3N
EDP_TX_AUXP
EDP_TX_AUXN
PCI-E/SATA
PCIE20_SATA2_TXP
PCIE20_SATA2_TXN
PCIE20_SATA2_RXP
PCIE20_SATA2_RXN
PCIE20_REFCLKP
PCIE20_REFCLKN
PCIE20_CLKREQn_M2
PCIE20_WAKEn_M2
PCIE20_PERSTn_M2
MIPI_RX
MIPI_CSI_RX_D0P
MIPI_CSI_RX_D0N
MIPI_CSI_RX_D1P
MIPI_CSI_RX_D1N
MIPI_CSI_RX_D2P
MIPI_CSI_RX_D2N
MIPI_CSI_RX_D3P
MIPI_CSI_RX_D3N
MIPI_CSI_RX_CLK0P
MIPI_CSI_RX_CLK0N
MIPI_CSI_RX_CLK1P
MIPI_CSI_RX_CLK1N
MIPI/LVDS_TX
MIPI_DSI_TX0_D0P/LVDS_TX0_D0P
MIPI_DSI_TX0_D0N/LVDS_TX0_D0N
MIPI_DSI_TX0_D1P/LVDS_TX0_D1P
MIPI_DSI_TX0_D1N/LVDS_TX0_D1N
MIPI_DSI_TX0_D2P/LVDS_TX0_D2P
MIPI_DSI_TX0_D2N/LVDS_TX0_D2N
MIPI_DSI_TX0_D3P/LVDS_TX0_D3P
MIPI_DSI_TX0_D3N/LVDS_TX0_D3N
MIPI_DSI_TX0_CLKP/LVDS_TX0_CLKP
MIPI_DSI_TX0_CLKN/LVDS_TX0_CLKN
HDMI_TX
HDMI_TX2P
HDMI_TX2N
HDMI_TX1P
HDMI_TX1N
HDMI_TX0P
HDMI_TX0N
HDMI_TXCLKP
HDMI_TXCLKN
HDMI_TX_HPDIN
HDMITX_CEC_M0
HDMITX_SCL
HDMITX_SDA
USB
USB_OTG0_DP
USB_OTG0_DM
USB_OTG0_VBUSDET
USB_OTG0_ID
USB2_HOST2_DP
USB2_HOST2_DM
USB2_HOST3_DP
USB2_HOST3_DM
USB3_HOST1_DP
USB3_HOST1_DM
USB3_HOST1_SSTXP
USB3_HOST1_SSTXN
USB3_HOST1_SSRXP
USB3_HOST1_SSRXN
Close to CPU board
VCC3V3_SYS
C351
10uF/10V
C0805
C349
10uF/10V
C0805
C350
0.1uF
C0402
TVS2
SMF3.3A
SOD123
V2 20210827
V3 2022 0531
VCC3V3_SYS
VCC_RTC
PMIC_32KOUT_SOC
HDMITX_CEC_M0
HDMITX_SCL
HDMITX_SDA
GMAC1_MCLKINOUT_M0
GMAC1_TXD0_M0
GMAC1_TXD1_M0
GMAC1_RXDV_CRS_M0
GMAC1_RXD1_M0
GMAC1_RXD0_M0
GMAC1_RXCLK_M0
GMAC1_TXD2_M0
GMAC1_TXD3_M0
GMAC1_TXCLK_M0
MIPI_DSI_TX0_D0N/LVDS_TX0_D0N
MIPI_DSI_TX0_D0P/LVDS_TX0_D0P
MIPI_DSI_TX0_D1N/LVDS_TX0_D1N
MIPI_DSI_TX0_D1P/LVDS_TX0_D1P
MIPI_DSI_TX0_D2N/LVDS_TX0_D2N
MIPI_DSI_TX0_D2P/LVDS_TX0_D2P
MIPI_DSI_TX0_CLKN/LVDS_TX0_CLKN
MIPI_DSI_TX0_CLKP/LVDS_TX0_CLKP
HDMI_TX_HPDIN
HDMI_TXCLKN
HDMI_TXCLKP
HDMI_TX0N
HDMI_TX0P
HDMI_TX1N
HDMI_TX1P
HDMI_TX2N
HDMI_TX2P
MIPI_CSI_RX_CLK1N
MIPI_CSI_RX_CLK1P
MIPI_CSI_RX_D3N
MIPI_CSI_RX_D3P
MIPI_CSI_RX_D2N
MIPI_CSI_RX_D2P
MIPI_CSI_RX_D1N
MIPI_CSI_RX_D1P
MIPI_CSI_RX_CLK0N
MIPI_CSI_RX_CLK0P
DIP186_47X40MM
IO 1.8V
U7
CM3566
IO 1.8V
I2C_GPIO_PWM_ADIN
GPIO0_A0_d
GPIO0_A3_u
GPIO0_A5_d
GPIO0_A6_d
I2C3_SCL
I2C3_SDA
PWM0_M0
PWM3_IR
LCD_BL_PWM
PWM5
LCD_PWREN_H
PMIC_32KOUT_SOC
SARADC_VIN0_KEYRECOVERY
SARADC_VIN2_HP_HOOK
SARADC_VIN3
Audio I2S SPDIF
I2S1_MCLK_M0_PMIC
I2S1_SDO0_M0_PMIC
I2S1_SCLK_TX_M0_PMIC
I2S1_SDI0_M0/PDM_SDI0_M0_PMIC
I2S1_LRCK_TX_M0_PMIC
SPDIF_TX_M2
SD Card
SDMMC0_D0
SDMMC0_D1
SDMMC0_D2
SDMMC0_D3
SDMMC0_CMD
SDMMC0_CLK
SDMMC0_DET_L
WIFI/BT IO 1.8V
SDMMC1_D0
SDMMC1_D1
SDMMC1_D2
SDMMC1_D3
SDMMC1_CMD
SDMMC1_CLK
WIFI_REG_ON_H
WIFI_WAKE_HOST_H
UART1_RX_M0
UART1_TX_M0
UART1_RTSn_M0
UART1_CTSn_M0
BT_REG_ON_H
BT_WAKE_HOST_H
HOST_WAKE_BT_H
I2S2_SCLK_TX_M0
I2S2_LRCK_TX_M0
I2S2_SDO_M0
I2S2_SDI_M0
CIF IO 1.8V
CIF_BBIT_D0
CIF_BBIT_D1
CIF_BBIT_D2
CIF_BBIT_D3
CIF_BBIT_D4
CIF_BBIT_D5
CIF_BBIT_D6
CIF_BBIT_D7
CIF_BBIT_CLKIN
CIF_BBIT_HREF
CIF_BBIT_VSYNC
CIF_CLKOUT
CAMERAF_RST_L
CAMERAB_RST_L
I2C4_SDA_M0_1V8
I2C4_SCL_M0_1V8
GPIO4_B5_d_1V8
BT656 IO 1.8V
VOP_BT656_D0_M1
VOP_BT656_D1_M1
VOP_BT656_D2_M1
VOP_BT656_D3_M1
VOP_BT656_D4_M1
VOP_BT656_D5_M1
VOP_BT656_D6_M1
VOP_BT656_D7_M1
VOP_BT656_CLK_M1
RGMII
GMAC1_TXD2_M0
GMAC1_TXD3_M0
GMAC1_RXD2_M0
GMAC1_RXD3_M0
GMAC1_TXCLK_M0
GMAC1_RXCLK_M0
GMAC1_RXD0_M0
GMAC1_RXD1_M0
GMAC1_RXDV_CRS_M0
GMAC1_TXD0_M0
GMAC1_TXD1_M0
GMAC1_TXEN_M0
GMAC1_MCLKINOUT_M0
GMAC1_MDC_M0
GMAC1_MDIO_M0
SPI/UART
SPI0_CLK_M0
SPI0_MOSI_M0
SPI0_MISO_M0
SPI0_CS0_M0
SPI3_CLK_M1
SPI3_MOSI_M1
SPI3_MISO_M1
SPI3_CS0_M1
UART2DBG_RX
UART2DBG_TX
UART3_RX_M0
UART3_TX_M0
UART4_RX_M0
UART4_TX_M0
UART5_RX_M1
UART5_TX_M1
Boardcon Confidential
Boardcon Inc
Room702-710, XinAn Business Building, 45Zone, BaoAn District,Shenzhen,China
+86-755-27571581
Title
B2B Connector
Size
A2
Document Number
EM3566
Drawn
Yhg
Rev
3
Date:
Friday, November 03, 2023
Sheet
4
of
14

HDMI

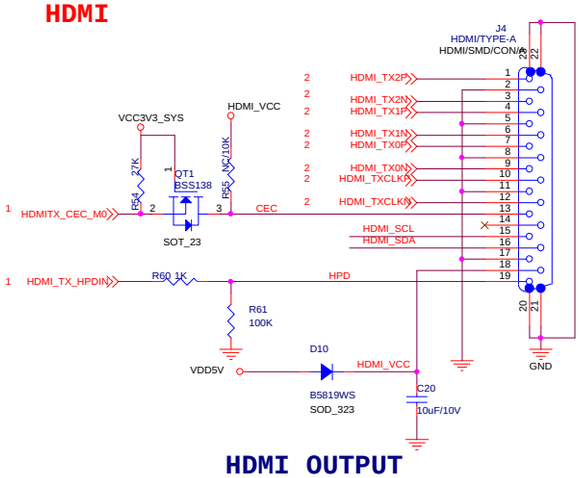

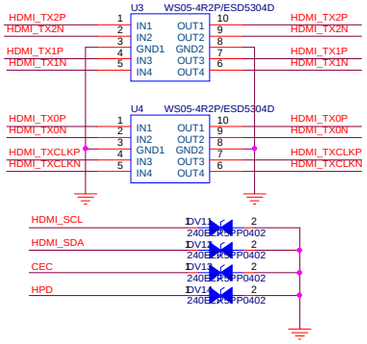

HDMI OUTPUT

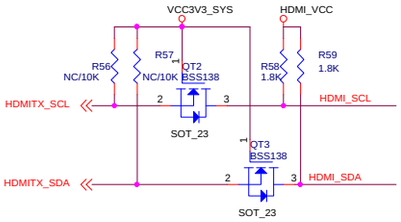

I2C Level Shift

Micro SD

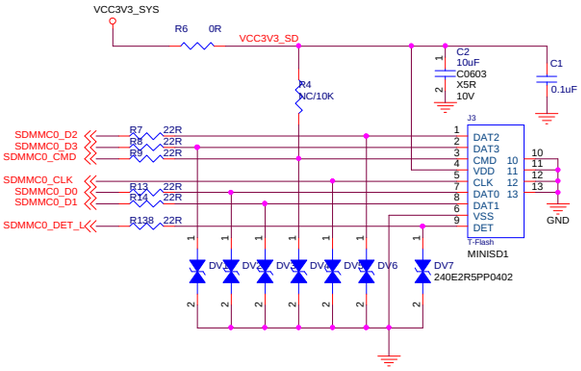

Boardcon Confidential

Boardcon Inc Room702-710, XinAn Business Building, 45Zone, BaoAn District,Shenzhen China +86-755-27571591

Title: HDMI/Ethernet			
Size: A3	Document Number: EM3566	Drawn: Yhg	Rev: 3
Date: Friday, November 03, 2023		Sheet 5 of 14	

WIFI/BT MODULE

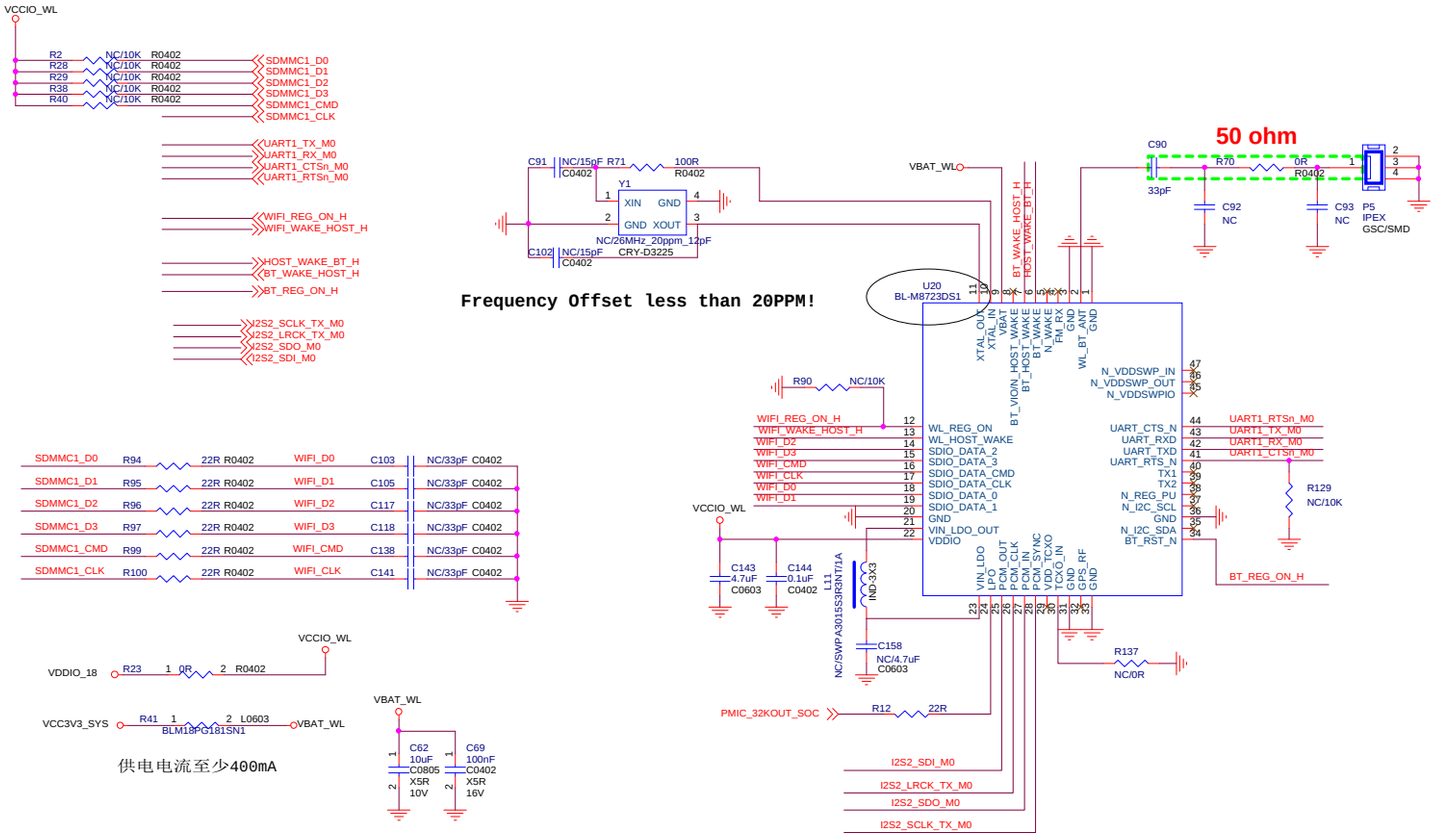

Boardcon Confidential

Boardcon Inc Room702-710, XinAn Business Building, 45Zone, BaoAn District,Shenzhen China +86-755-27571591

Title: WIFI/BT			
Size: A3	Document Number: EM3566	Drawn: Yhg	Rev: 3
Date: Friday, November 03, 2023		Sheet 6 of 14	

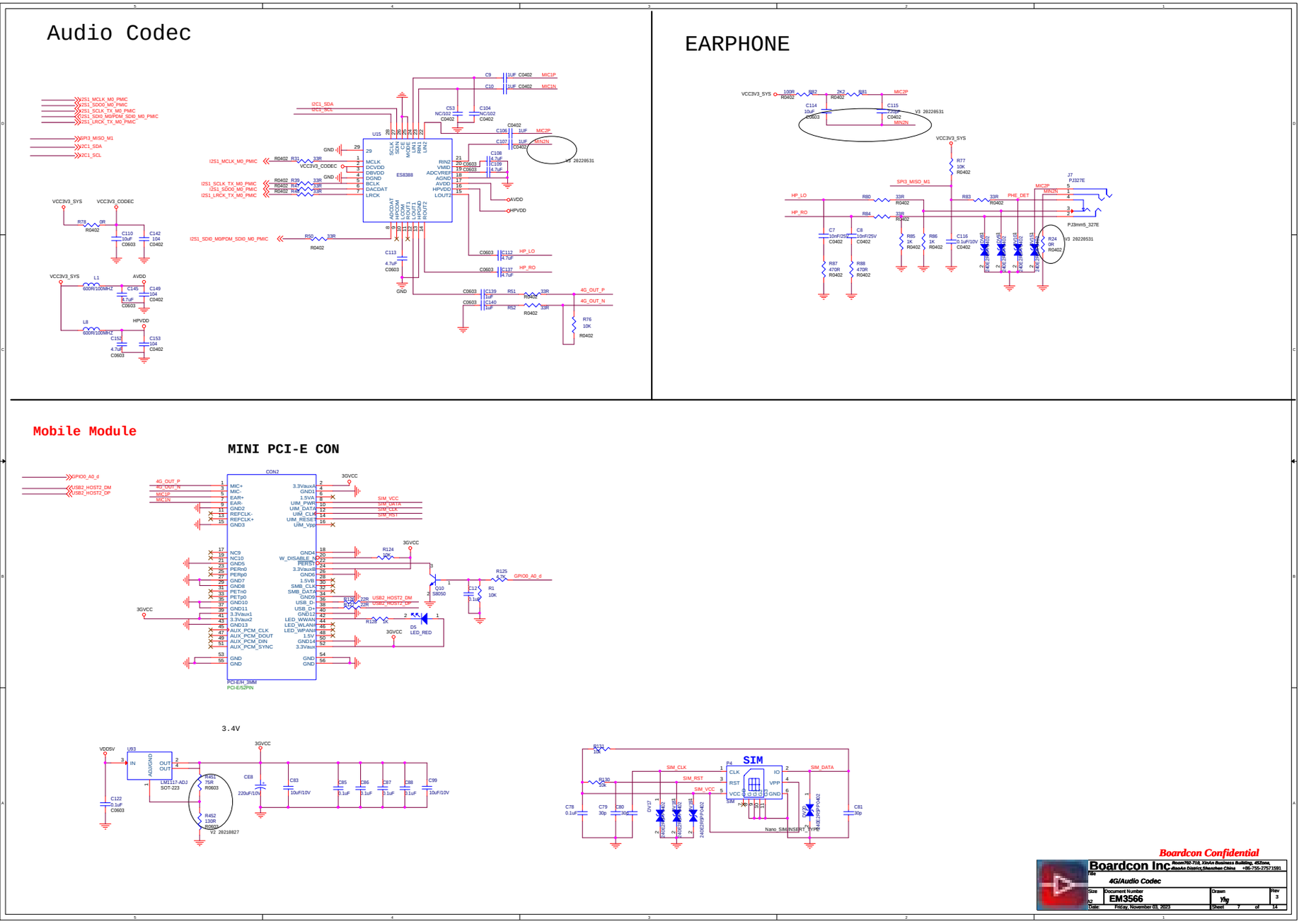
Audio Codec
EARPHONE
Mobile Module
MINI PCI-E CON
3.4V
SIM
Boardcon Confidential
Boardcon Inc
Room702-710, XinAn Business Building, 45Zone, BaoAn District,Shenzhen China +86-755-27571591
Title
4G/Audio Codec
Size
A2
Document Number
EM3566
Drawn
Yhg
Rev
3
Date: Friday, November 03, 2023
Sheet 7 of 14

PCI.Express

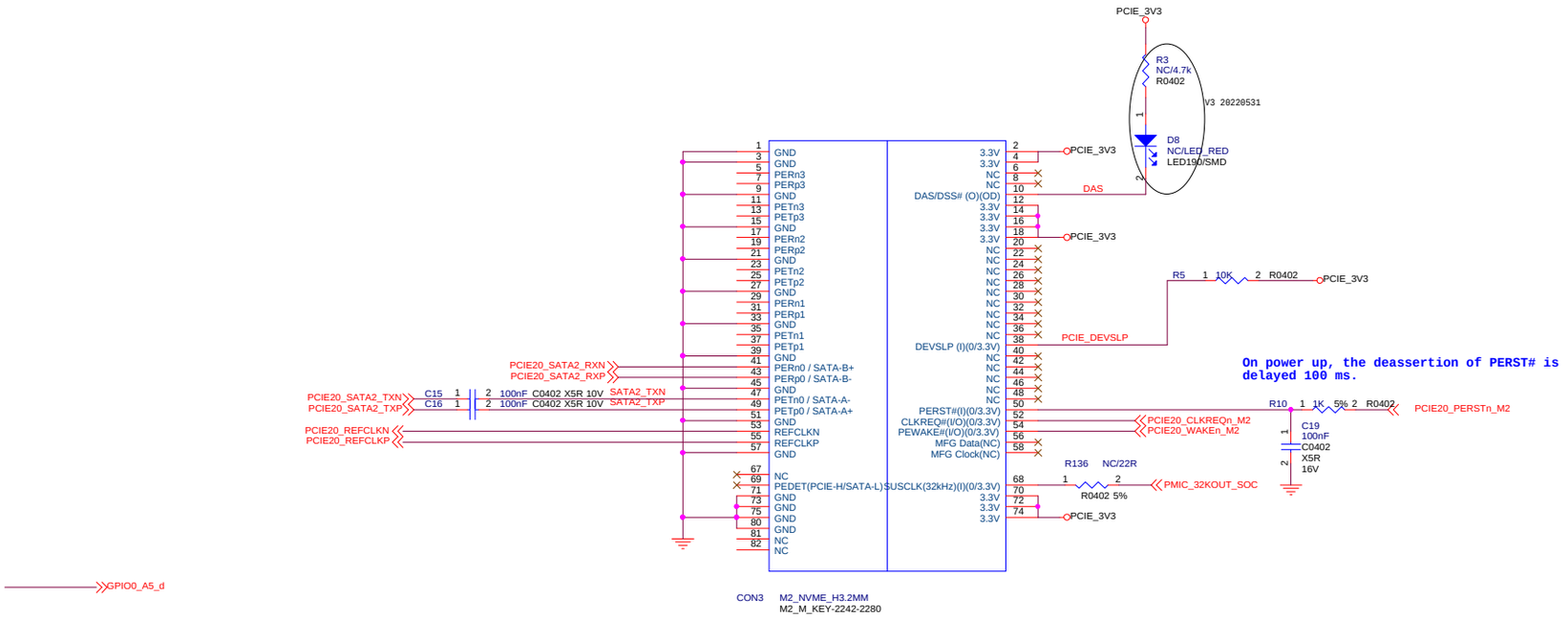

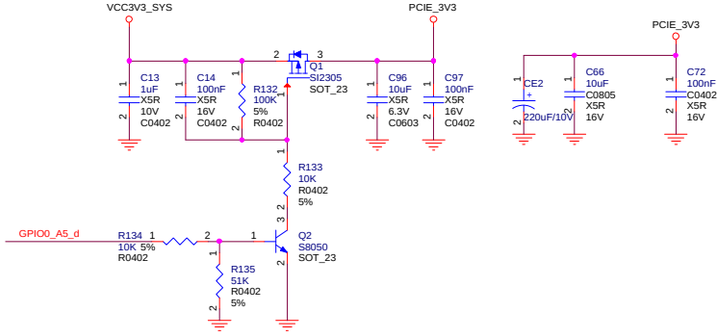

Boardcon Confidential

Boardcon Inc Room702-710, XinAn Business Building, 452one, BaoAn District,Shenzhen China +86-755-27571591

Title: PCI-E NVME			
Size: A3	Document Number: EM3566	Drawn: Yhg	Rev: 3
Date: Friday, November 03, 2023		Sheet 8 of 14	

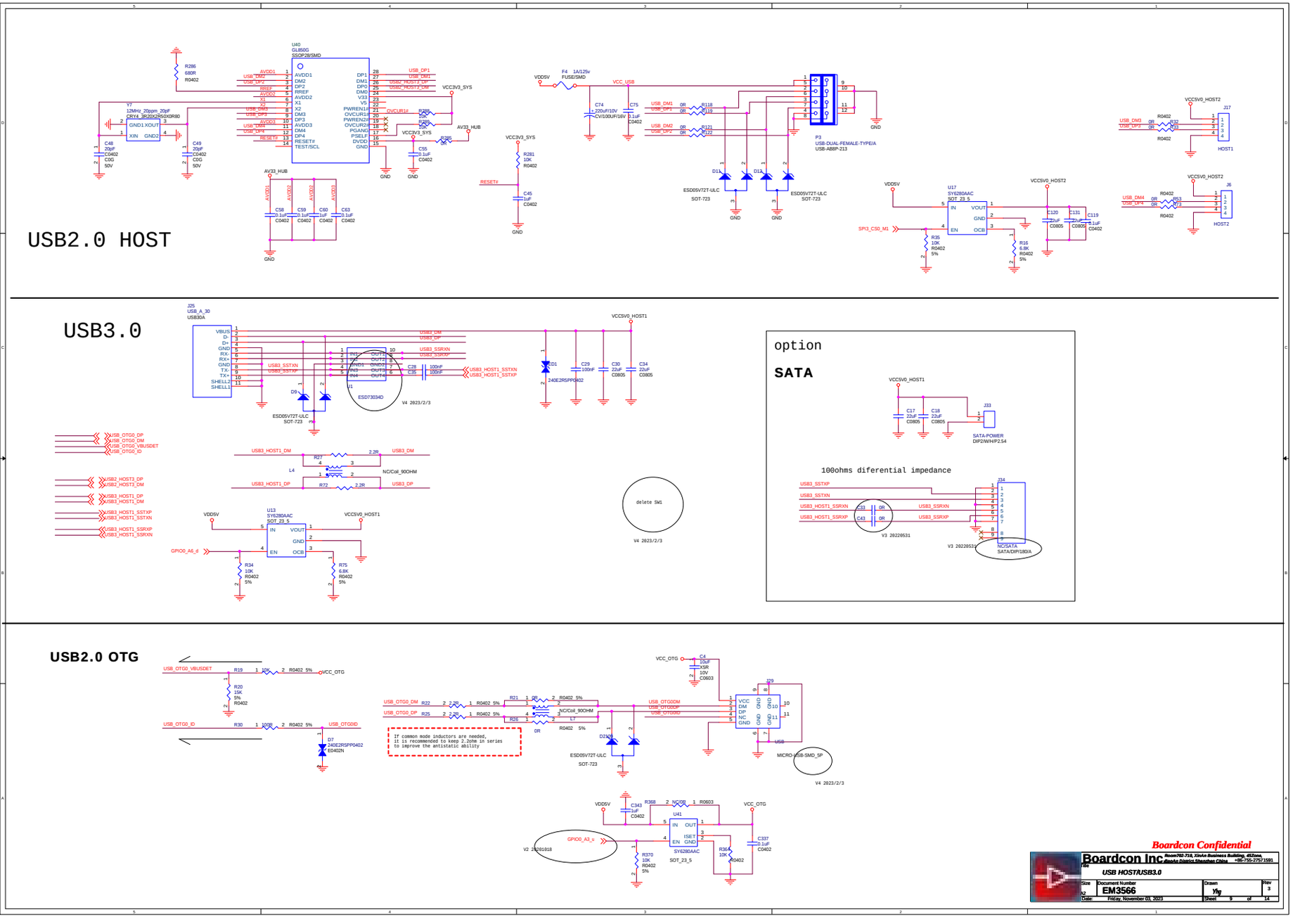
USB2.0 HOST
USB3.0
option
SATA
100ohms diferential impedance
USB2.0 OTG
Boardcon Confidential
Boardcon Inc
USB HOST/USB3.0
EM3566
Friday, November 03, 2023

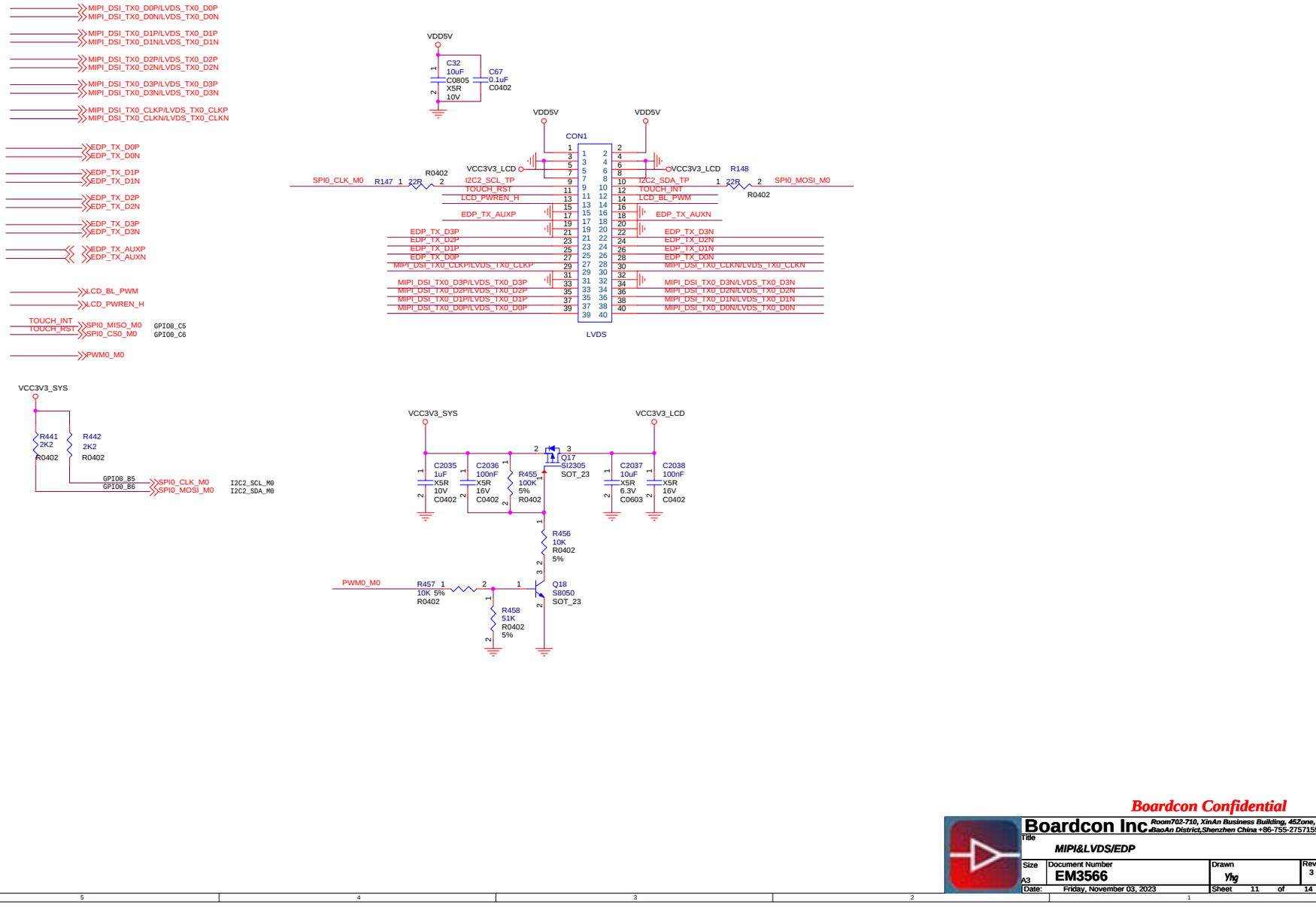

Boardcon Confidential

Boardcon Inc Room702-710, XinAn Business Building, 452one, BaoAn District,Shenzhen China +86-755-27571591			
Title: MIPI&LVDS/EDP			
Size: A3	Document Number: EM3566	Drawn: Yhg	Rev: 3
Date: Friday, November 03, 2023		Sheet 11 of 14	

ADC

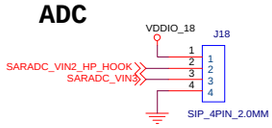

1V8 GPIO

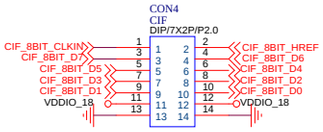

GPS

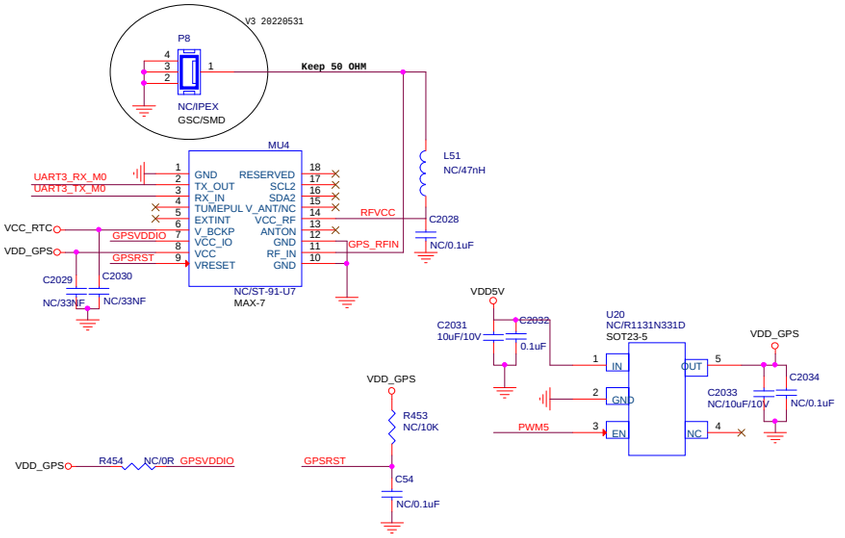

UART

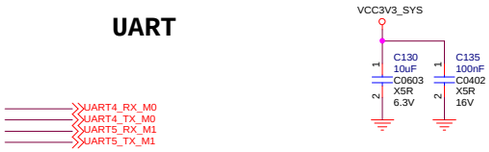

UART1

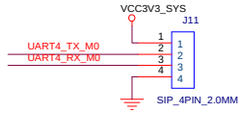

UART2

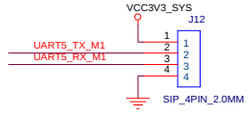

RS485

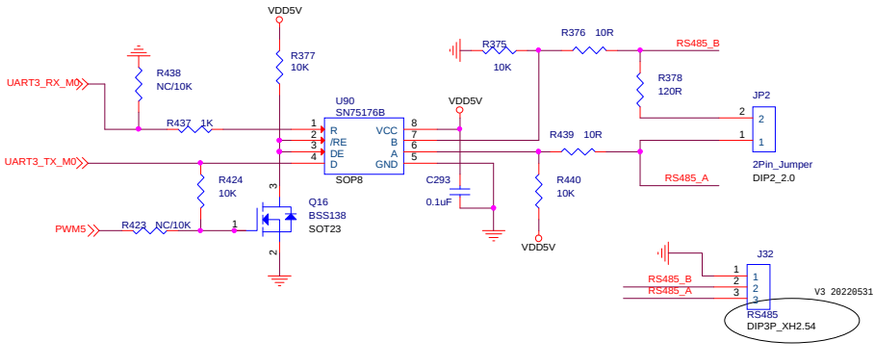

Boardcon Confidential

Boardcon Inc Room702-710, XinAn Business Building, 452one, BaoAn District,Shenzhen China +86-755-27571591

Title	GPIO/UART		
Size A3	Document Number EM3566	Drawn Yhg	Rev 3
Date: Friday, November 03, 2023		Sheet 12 of 14	

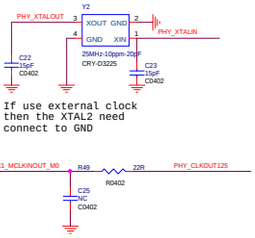

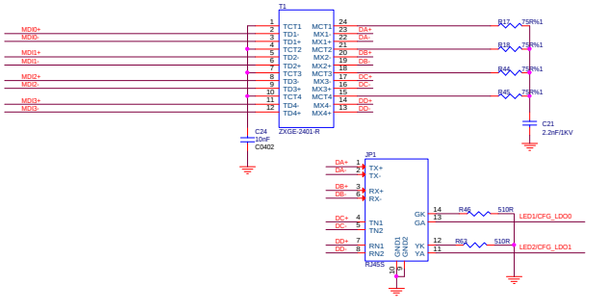

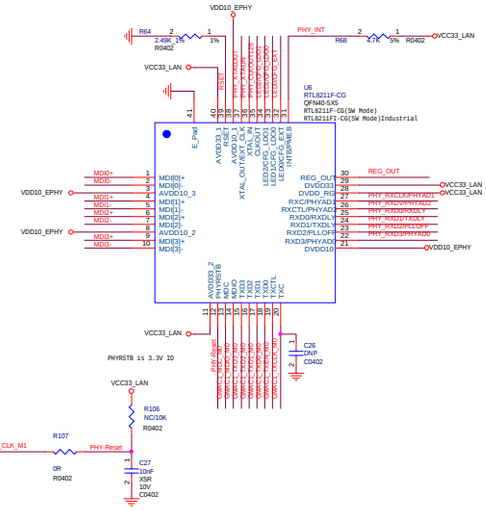

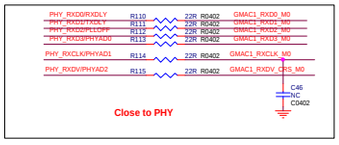

CFG_EXT=1:Use the external power source for the IO pad.
CFG_LDO1=1, CFG_LDO0=0: IO pad 1.8V **Default: IO pad=3.3V**
CFG_LDO1=0,CFG_LDO0=0: IO pad 3.3V

RGMII Power Source	CFG_EXT	CFG_LDO[1:0]	
External 3.3V(default)	1'b1	2'b00	
External 1.8V	1'b1	2'b10	
Internal 1.8V	1'b0	2'b10	

VCCIO_PHY Voltage Config

PHY Address Config

PHY Address	PHYAD[2:0]
1 (default)	3'b001

Pull-up for additional 2ns delay to RXC for data latching

Pull-up for additional 2ns delay to TXC for data latching

Pull-up to disable PLL @ ALDPS mode

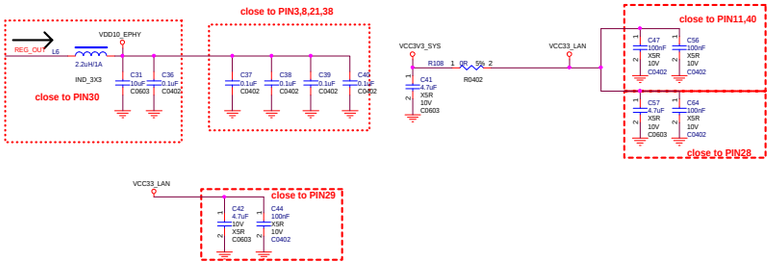

Boardcon Confidential

Boardcon Inc Room702-710, XinAn Business Building, 452ma, BaoAn District,Shenzhen China +86-755-27571591

File: Ethernet

Size	Document Number	Drawn	Rev
A3	EM3566	ylg	3
Date:	Friday, November 03, 2023	Sheet 13 of 14	

SPDIF-OUT

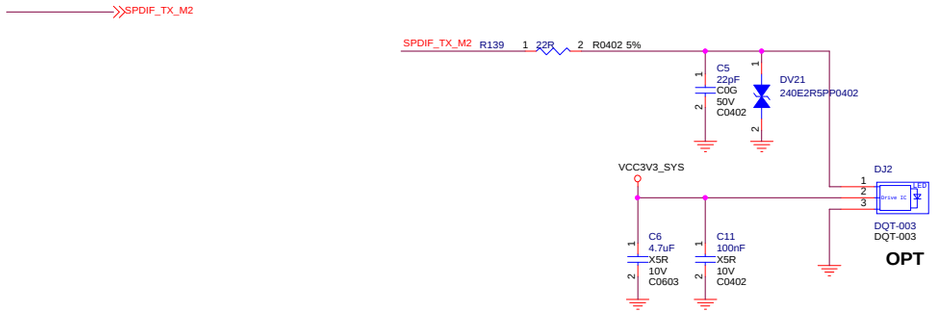

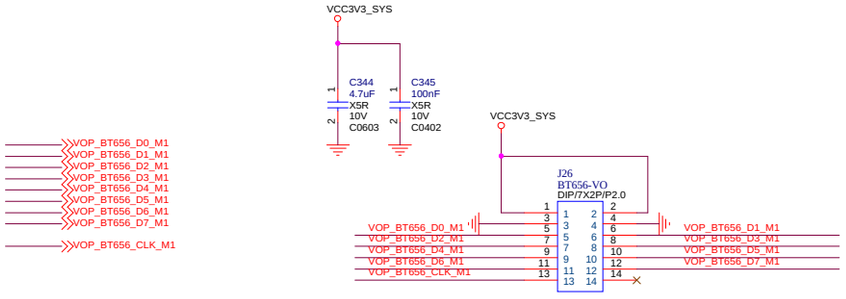

Boardcon Confidential

Boardcon Inc Room702-710, XinAn Business Building, 452one, BaoAn District,Shenzhen China +86-755-27571591

Title	SPDIF		
Size A3	Document Number EM3566	Drawn Yhg	Rev 3
Date: Friday, November 03, 2023		Sheet 14 of 14	

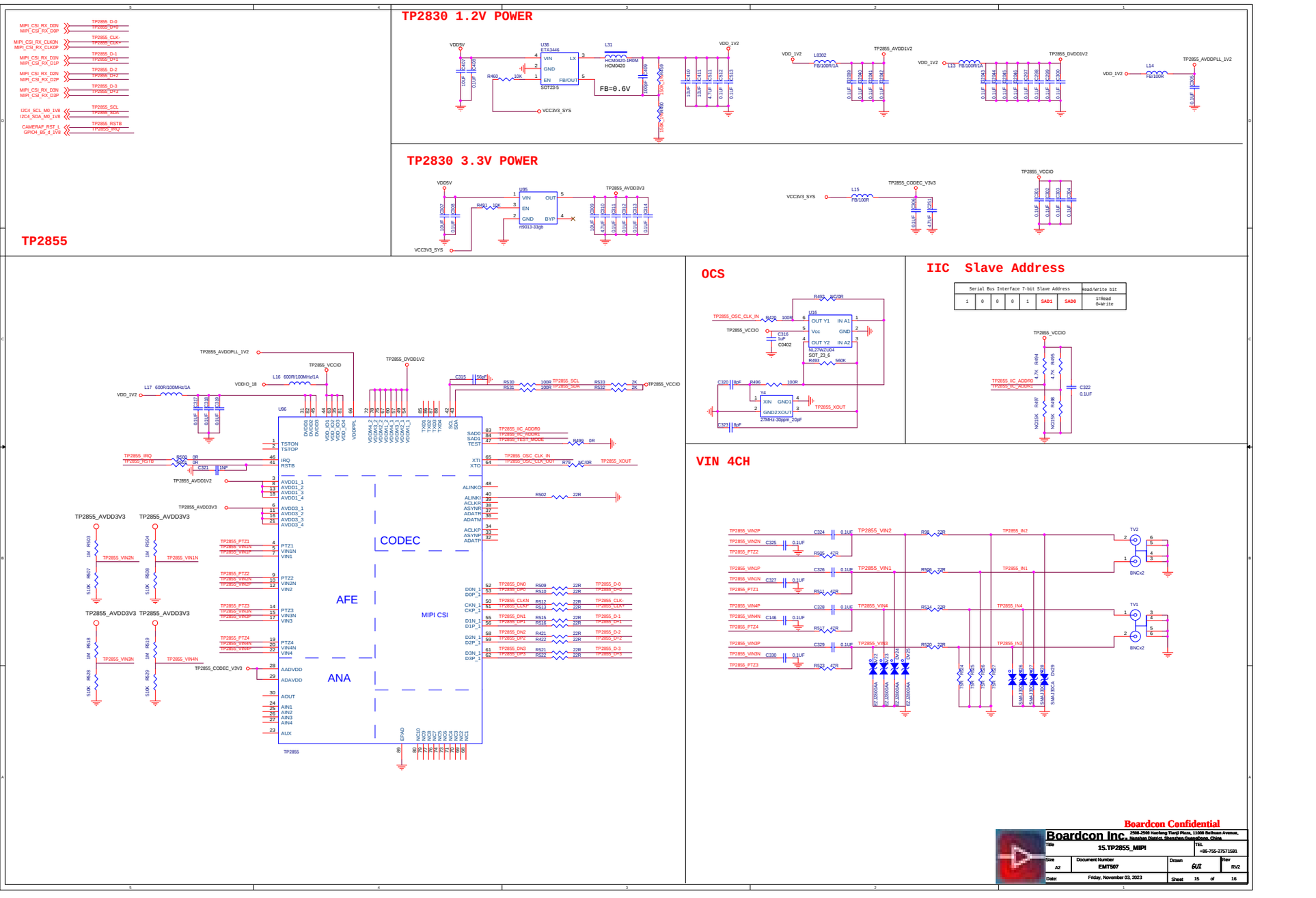
TP2830 1.2V POWER
TP2830 3.3V POWER
TP2855
OCS
IIC Slave Address
VIN 4CH
CODEC
AFE
ANA
MIPI CSI
Boardcon Confidential
Boardcon Inc.
Title
15.TP2855_MIPI
Size
A2
Document Number
EMT507
Drawn
GUI
Rev
RV2
Date:
Friday, November 03, 2023
Sheet
15
of
16