JOHANNES KEPLER
UNIVERSITÄT LINZ

# TinyWhisper – SKY130

Institute for
Integrated Circuits and
Quantum Computing

Simon Dorrer, Harald Pretl

**Tiny Tapeout, November 2025**

**JOHANNES KEPLER**
**UNIVERSITÄT LINZ**
Altenberger Straße 69
4040 Linz, Österreich
jku.at

# Top-Level Schematic

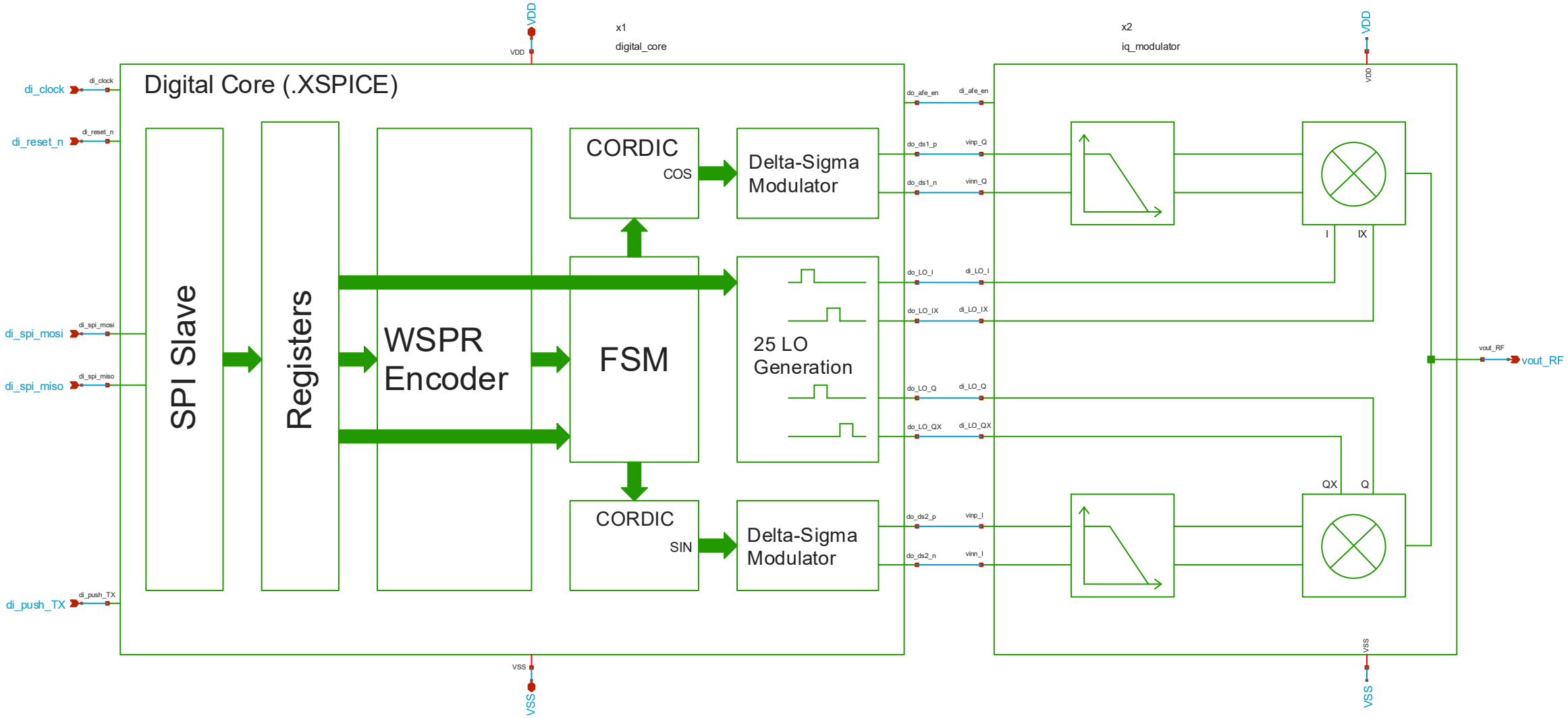

# Inverter-Based OTA

# Schematic – Inverter

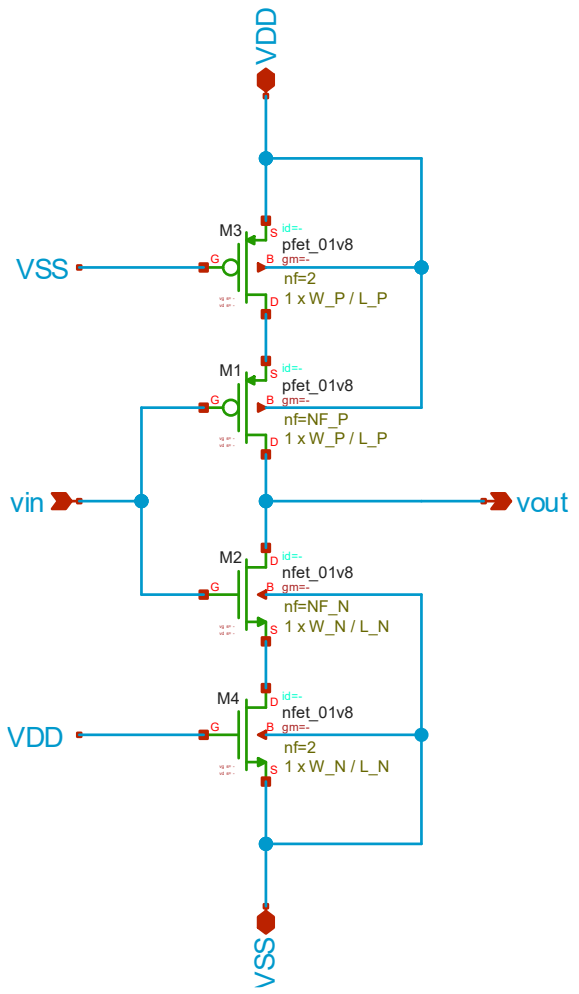


- Wp = 54um (36um)
- Wn = 18um (12um)
- W_NF = 3um
- L = 1.0um

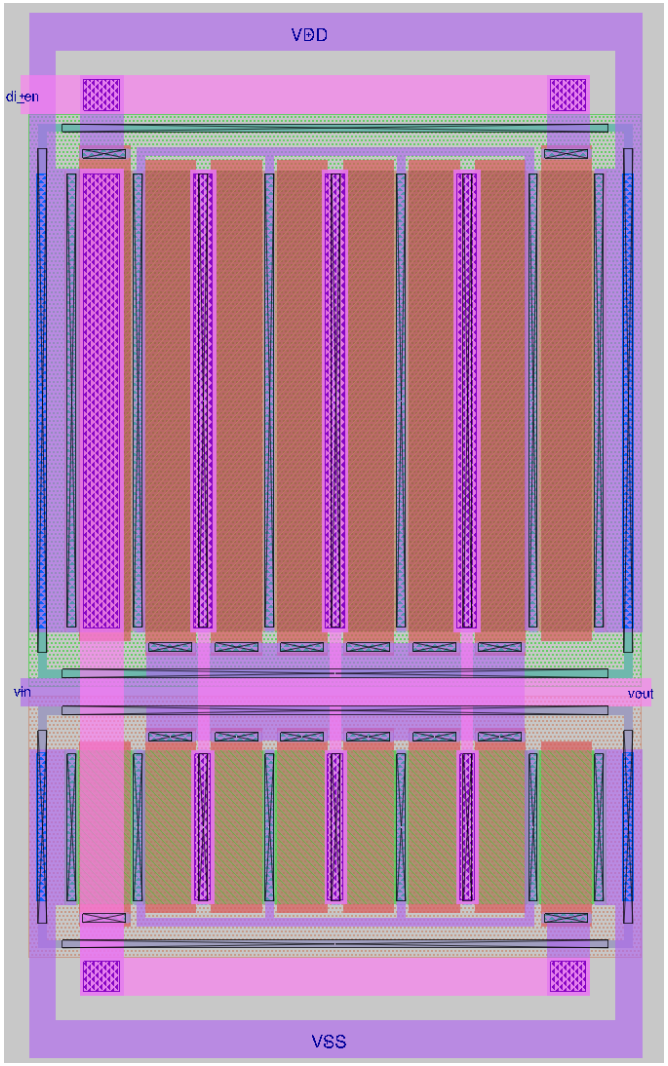

# Schematic

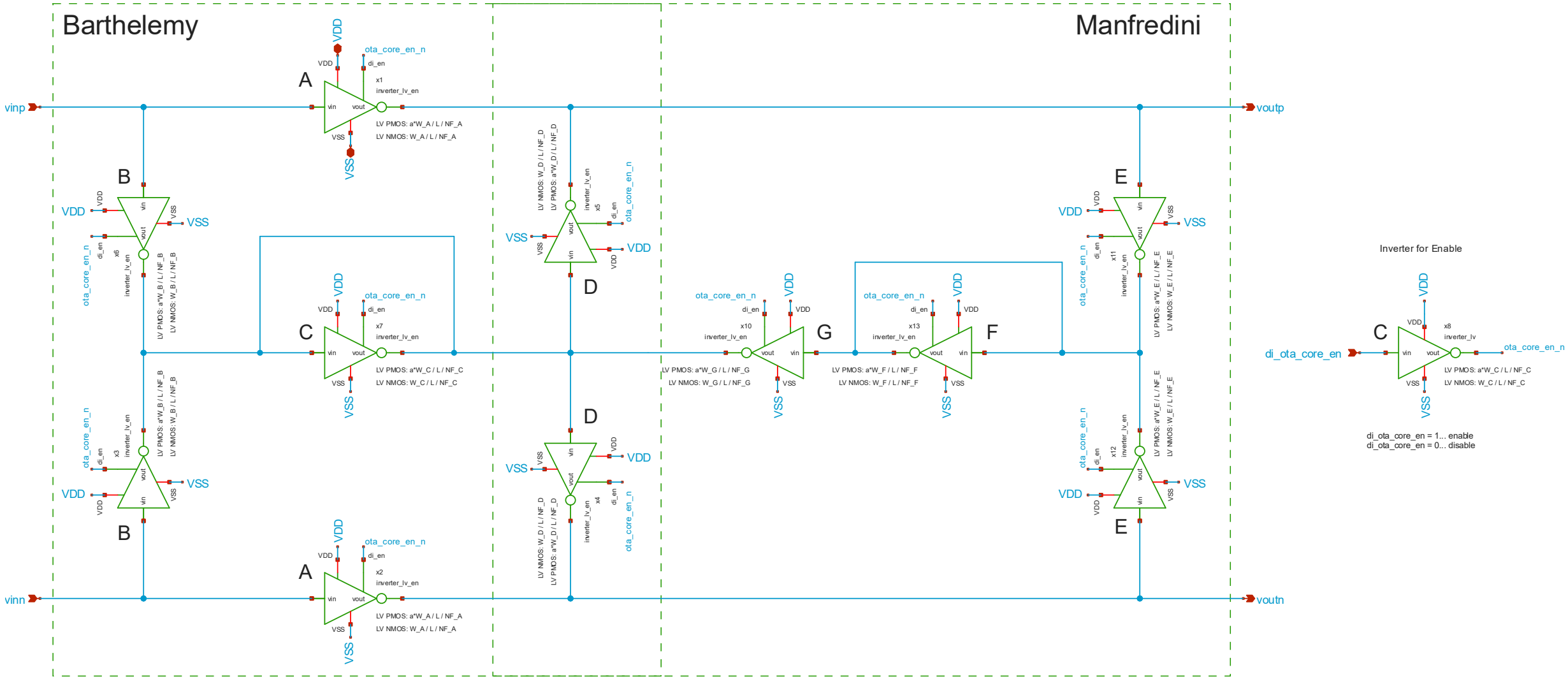
Barthelemy
Manfredini
vinp
vinn
voutp
voutn
A
B
C
D
E
F
G
VDD
VSS
ota_core_en_n
di_en
inverter_lv_en
LV PMOS: a*W_A / L / NF_A
LV NMOS: W_A / L / NF_A
LV PMOS: a*W_B / L / NF_B
LV NMOS: W_B / L / NF_B
LV PMOS: a*W_C / L / NF_C
LV NMOS: W_C / L / NF_C
LV NMOS: W_D / L / NF_D
LV PMOS: a*W_D / L / NF_D
LV PMOS: a*W_G / L / NF_G
LV NMOS: W_G / L / NF_G
LV PMOS: a*W_F / L / NF_F
LV NMOS: W_F / L / NF_F
LV PMOS: a*W_E / L / NF_E
LV NMOS: W_E / L / NF_E
Inverter for Enable
di_ota_core_en
di_ota_core_en = 1... enable
di_ota_core_en = 0... disable

# Layout

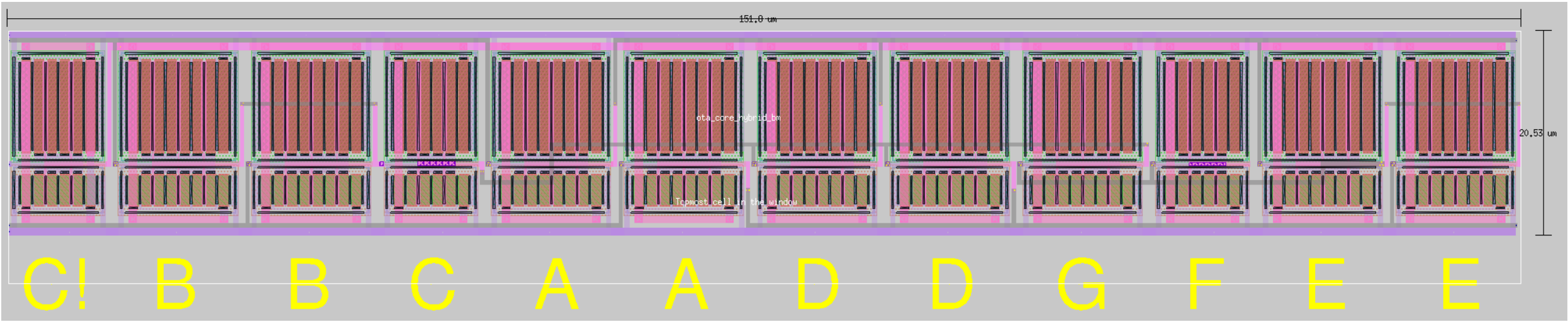
151.8 um
20.53 um
ota_core_hybrid_bm
Topmost cell in the window
C! B B C A A D D G F E E

# DC Testbench – Output Voltage Swing

- Vout,max = 1.3V (linear)
- Vout,min = 0.3V (linear)
- Vout,max = 1.72V (saturation)
- Vout,min = 0.09V (saturation)

Testbench for Output Voltage Swing analysis - OTA Core

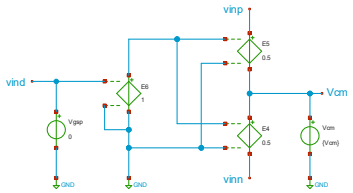


NGSPICE

```
.param VDD=1.8
.csparam VDD=VDD
.param Vcm=VDD/2
.param temp=27
.param Cload=10p
.param W_long=18.0
.param W_short=12.0
.param a=3
.param L=1.0
.param NF_long=6
.param NF_short=4
.options savecurrents klu method=gear reltol=1e-4 abstol=1e-15 gmin=1e-15
.control

save all

* Operating Point Analysis
op
remzerovec
write ota_core_tb_ICMR.raw
set appendwrite

* DC Sweep
dc Vgsp -$&VDD $&VDD 1m
remzerovec
write ota_core_tb_ICMR.raw
set appendwrite

* Plotting
plot vinp voutp voutn

* Measurement
meas dc Vgsp_at_Vcm when voutp=voutn
print Vgsp_at_Vcm

meas dc vout_pp_max MAX v(voutp)
meas dc vout_pp_min MIN v(voutp)
let vout_pp = vout_pp_max - vout_pp_min
print vout_pp

* Write Data
unset appendwrite
set wr_vecnames
set wr_singlescale
wrdata /foss/designs/TinyWhisper/python/plot_simulations/data/ota_core_tb_ICMR.txt v(vinp) v(voutp) v(voutn)

*quit
.endc
```

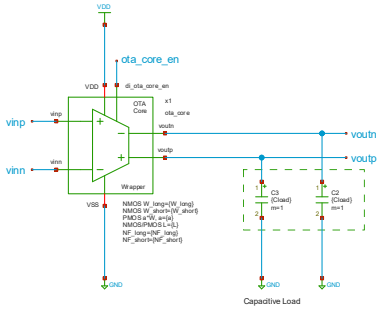


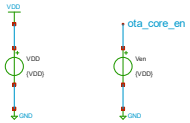


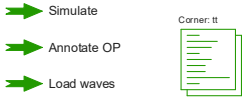


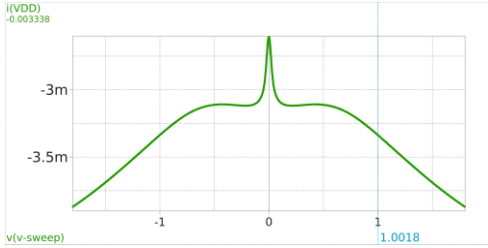


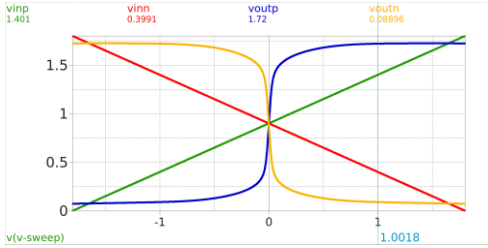


| | | |
|---|---|---|
| Simon Dorrer | | |
| Page of | Rev. 1.0 | 2025-10-28 09:53:45 |

XSCHEM

# AC Testbench – Open-Loop Gain

- OL(@1Hz) = 30.69dB
- fc = 926kHz @ 10pF
- Rin ~ ???k
- Rout ~ 20k

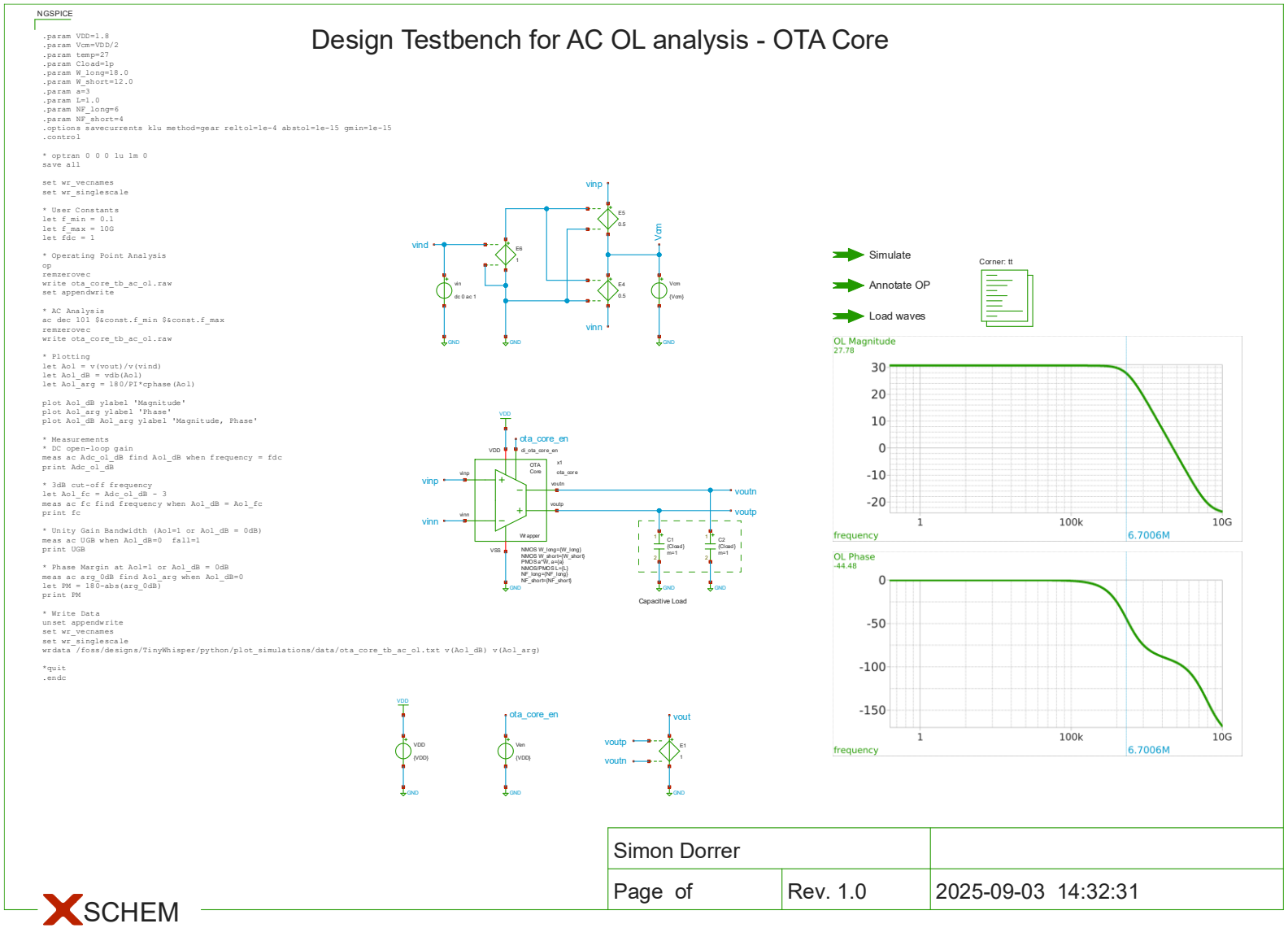

# CACE – Open-Loop Gain

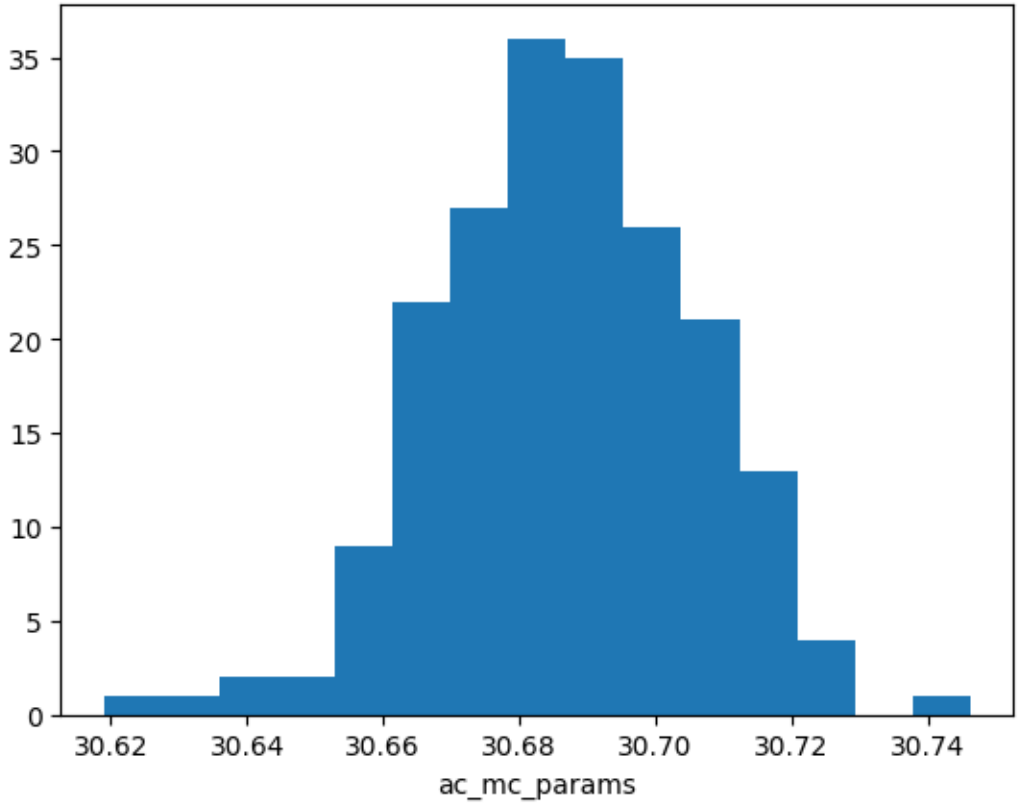


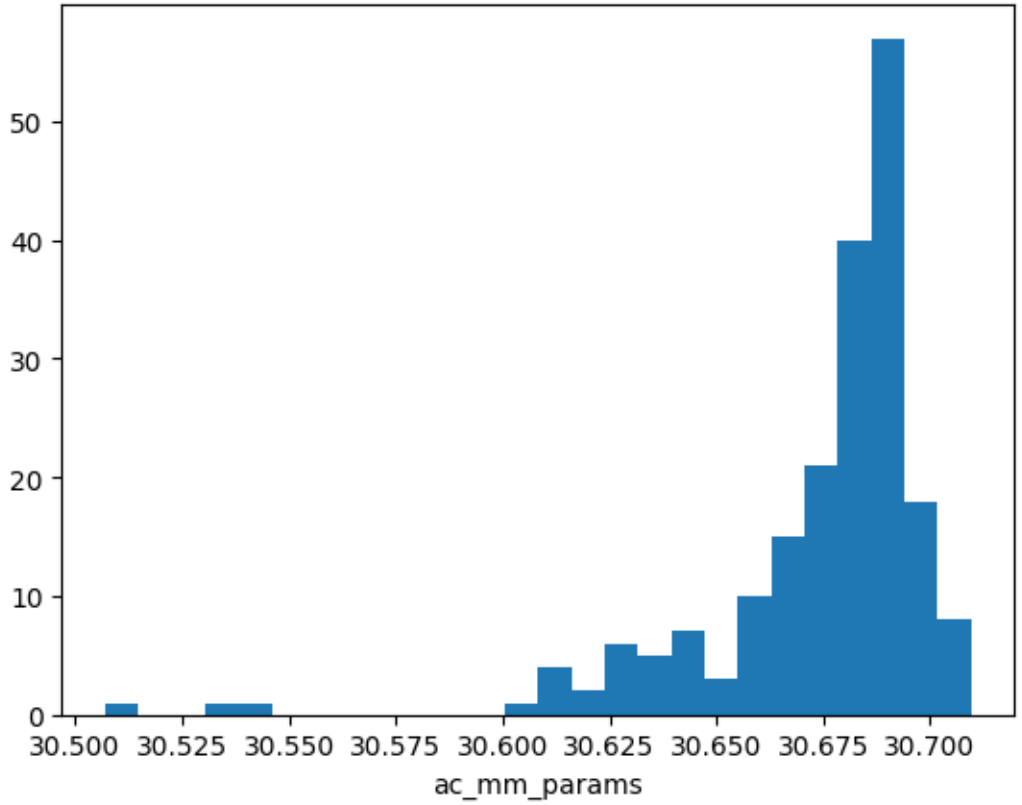

# CACE – Corner Frequency

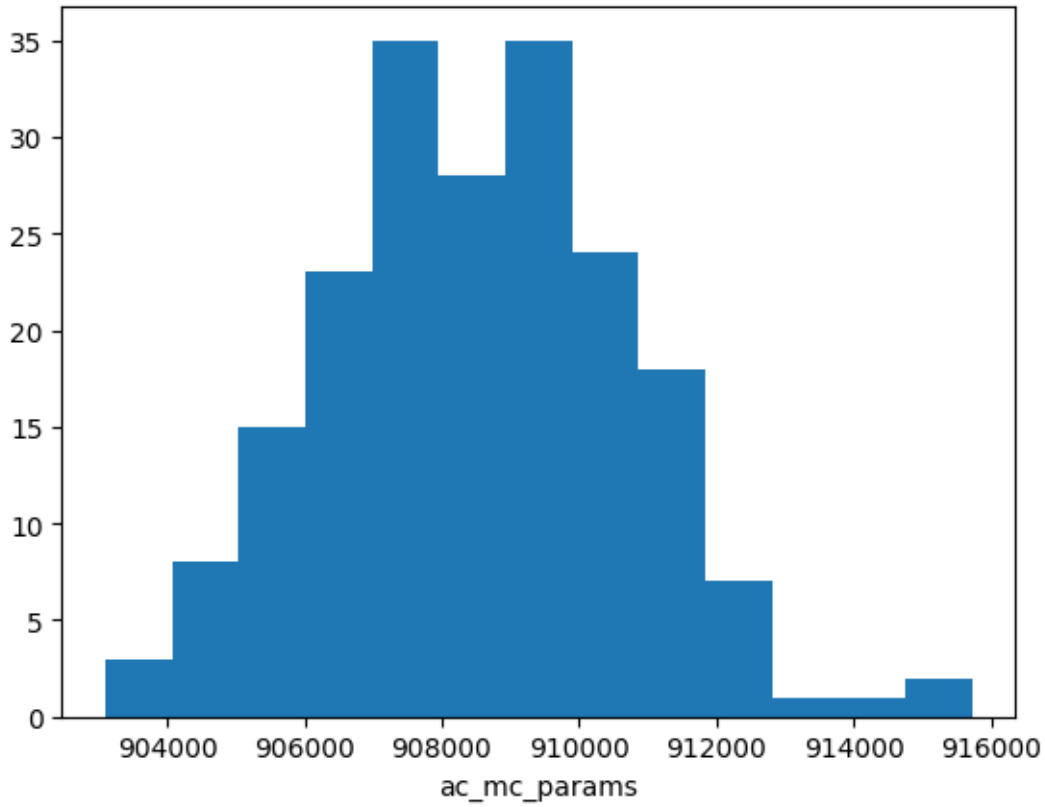


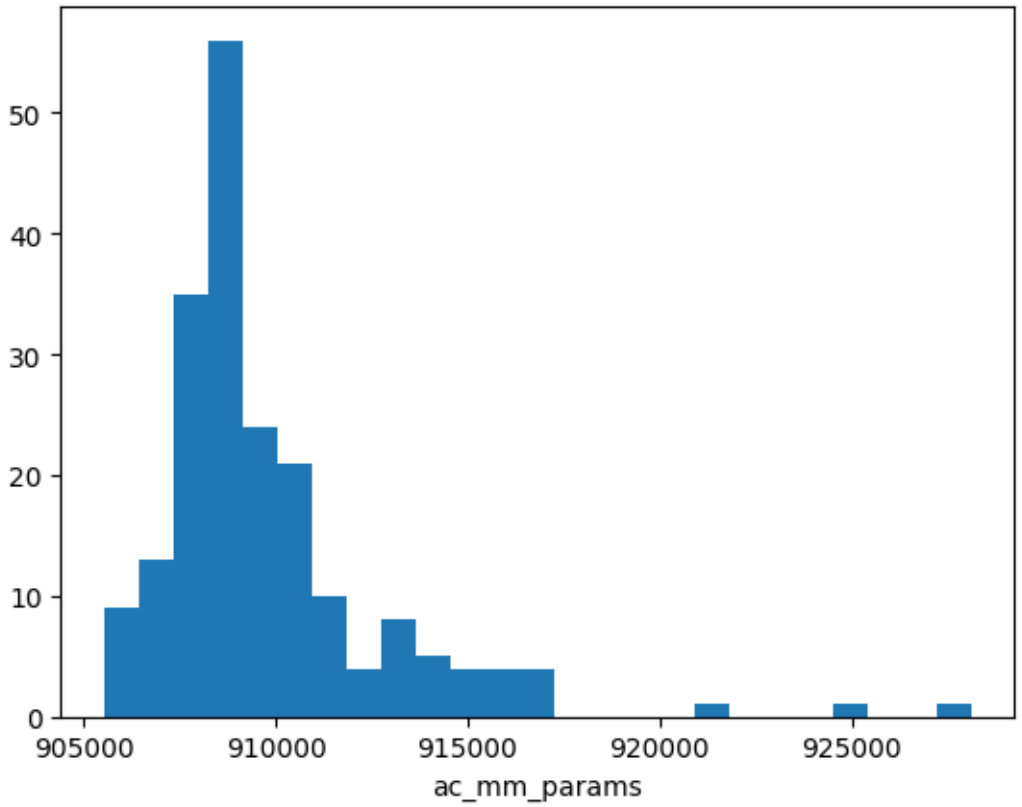

# Multiple Feedback Filter

# Schematic

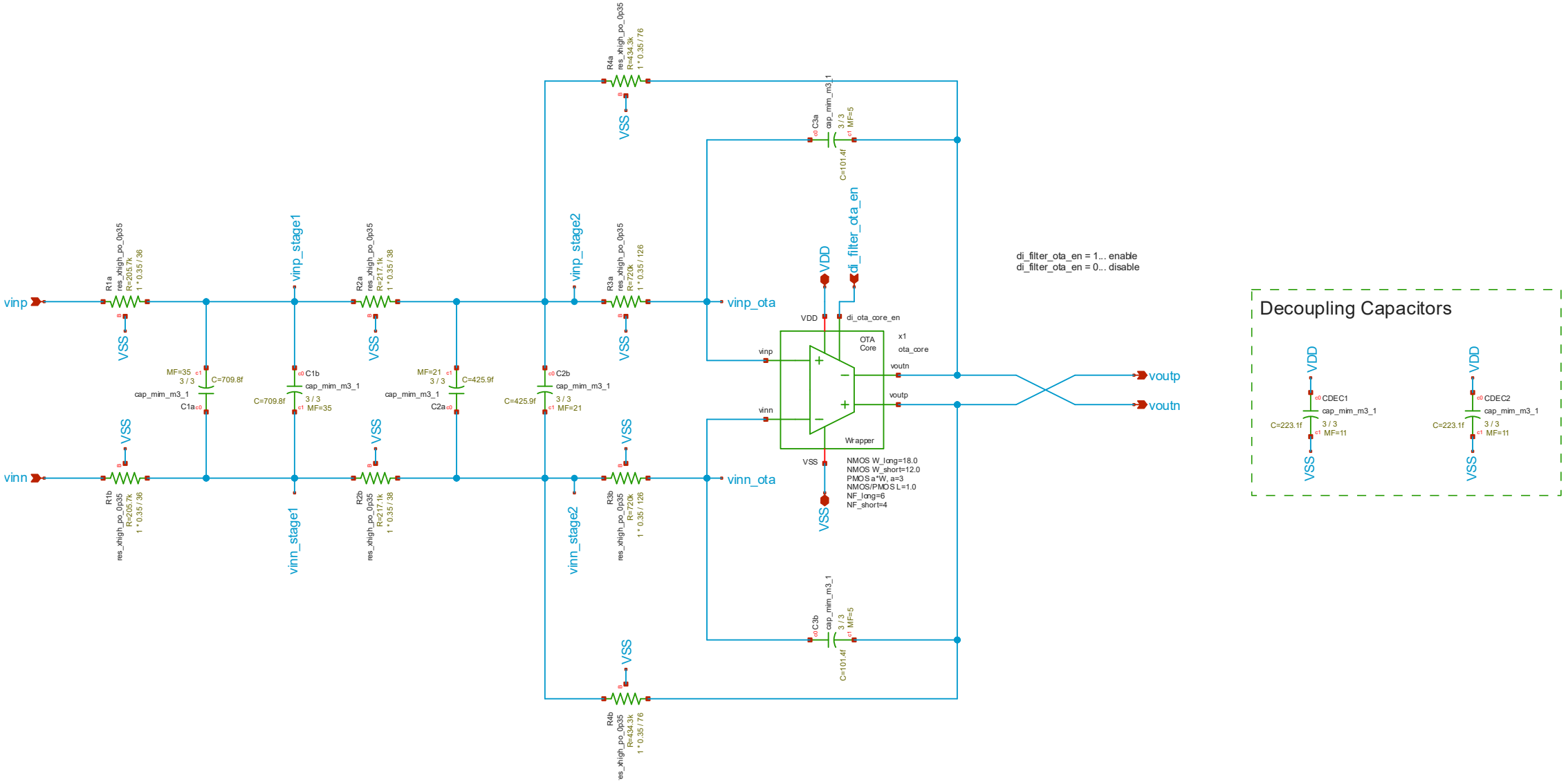
vinp
vinn
R1a
R1b
res_xhigh_po_0p35
R=205.7k
1 * 0.35 / 36
VSS
MF=35
3 / 3
C=709.8f
cap_mim_m3_1
C1a
C1b
C=709.8f
MF=35
vinp_stage1
vinn_stage1
R2a
R2b
R=217.1k
1 * 0.35 / 38
MF=21
C=425.9f
C2a
C2b
C=425.9f
MF=21
vinp_stage2
vinn_stage2
R3a
R3b
R=720k
1 * 0.35 / 126
R4a
R4b
R=434.3k
1 * 0.35 / 76
C3a
C3b
C=101.4f
MF=5
VDD
di_filter_ota_en
di_filter_ota_en = 1... enable
di_filter_ota_en = 0... disable
vinp_ota
vinn_ota
di_ota_core_en
OTA
Core
x1
ota_core
vinp
vinn
voutn
voutp
Wrapper
NMOS W_long=18.0
NMOS W_short=12.0
PMOS a*W, a=3
NMOS/PMOS L=1.0
NF_long=6
NF_short=4
Decoupling Capacitors
CDEC1
CDEC2
C=223.1f
MF=11

# Layout

- ToDo

# AC Testbench – Closed-Loop Gain

```
third_order_mfb_lp_filter_tb_ac_cl.spice" -a || sh
adc_cl_db          =  -2.774888e-01
adc_cl_db = -2.77489e-01
fcu                =  4.273043e+05
fcu = 4.273043e+05
ngspice 1 -> []
```

- CL(@1Hz) = -0.28dB
- fc = 427kHz @ 10pF
- Rin ~ 520k
- Rout ~ 1k

$$R_{\text{out}} \approx 2\frac{R_{\text{in}}}{1+A_{\text{ol}}/A_{\text{cl}}}$$

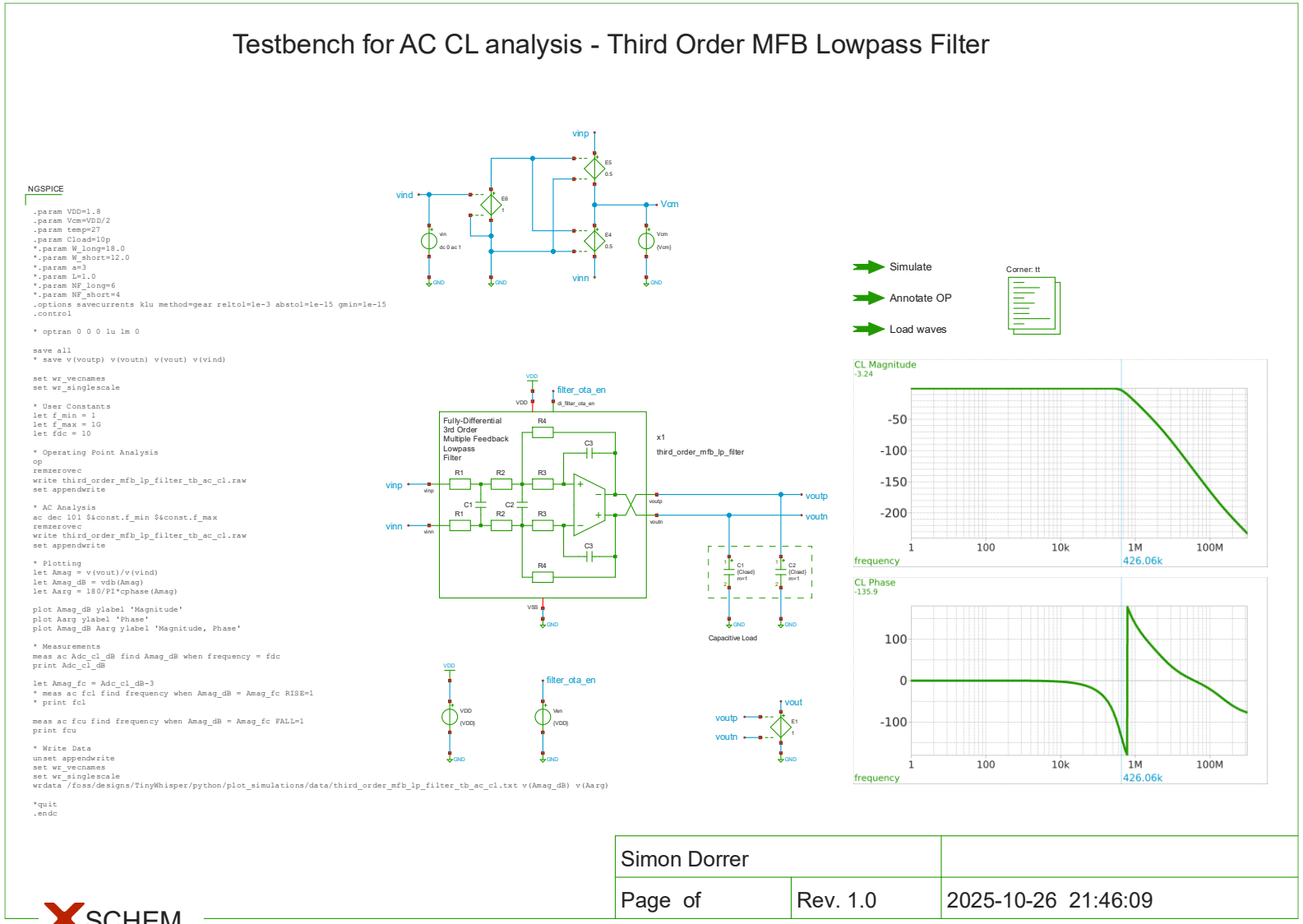

# CACE – Closed-Loop Gain

- CL = 10pF

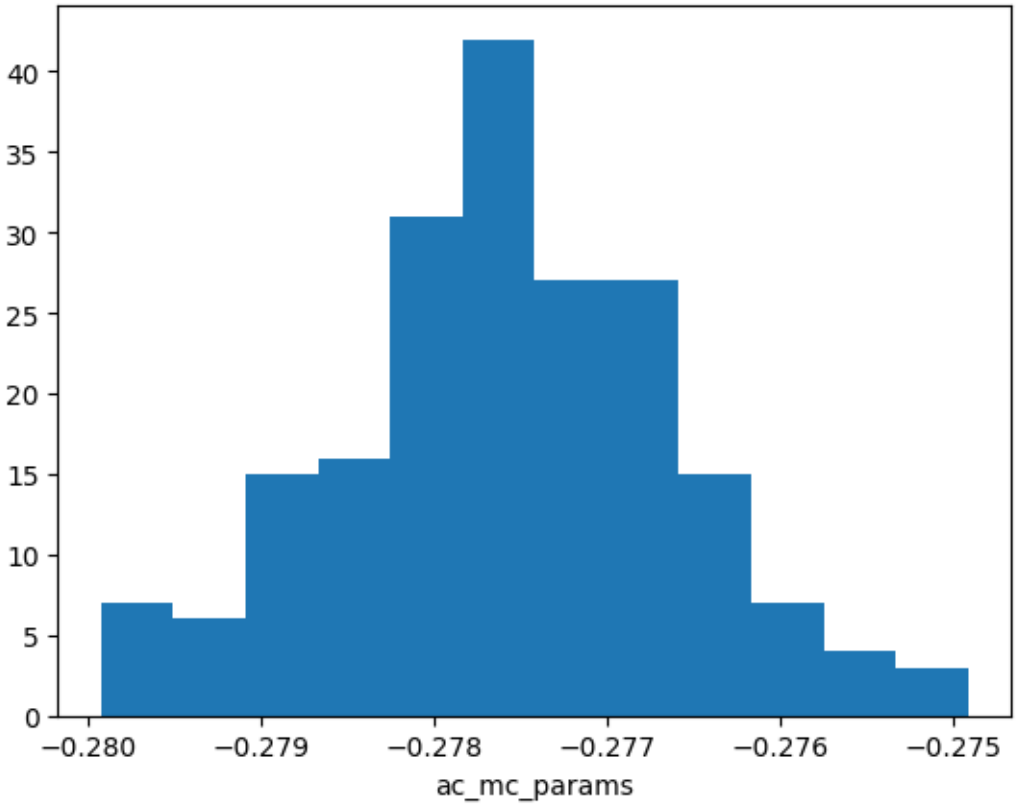


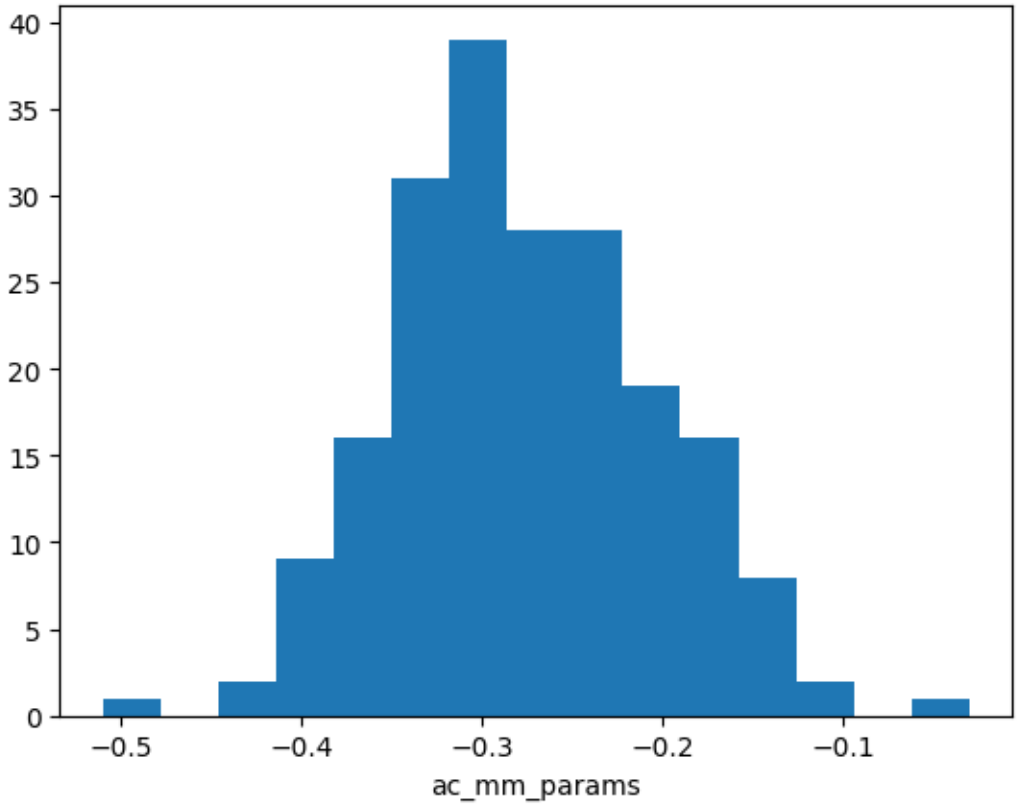

# CACE – CMRR

- CL = 10pF

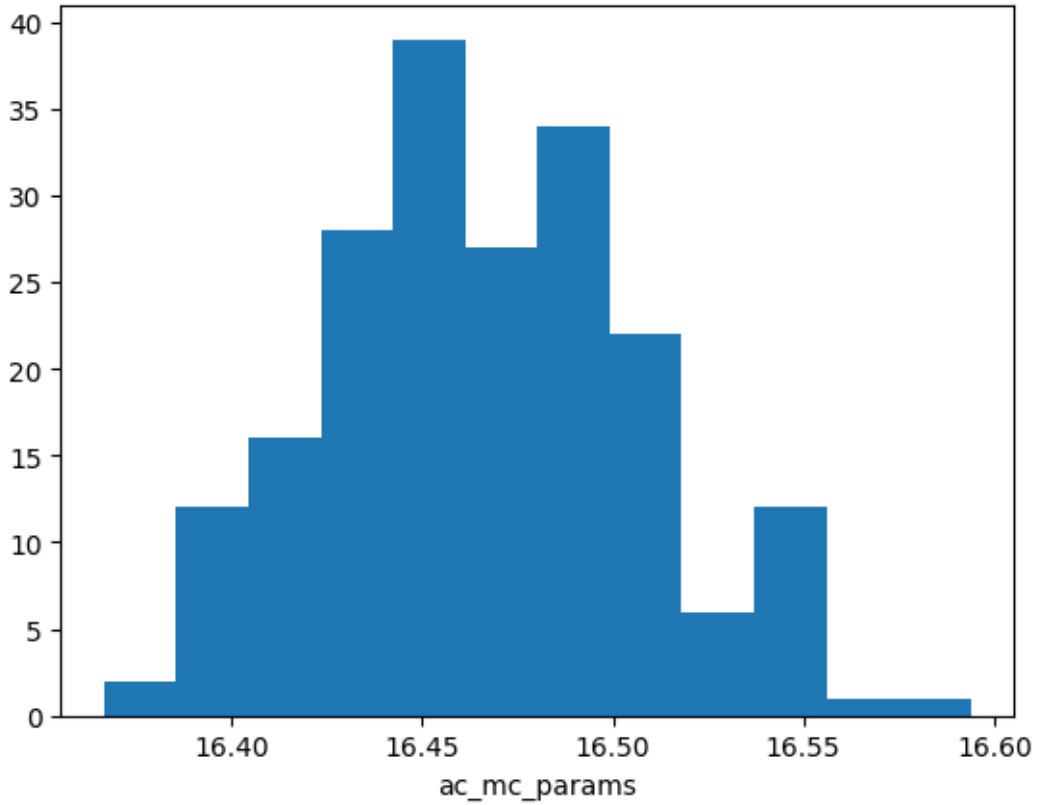


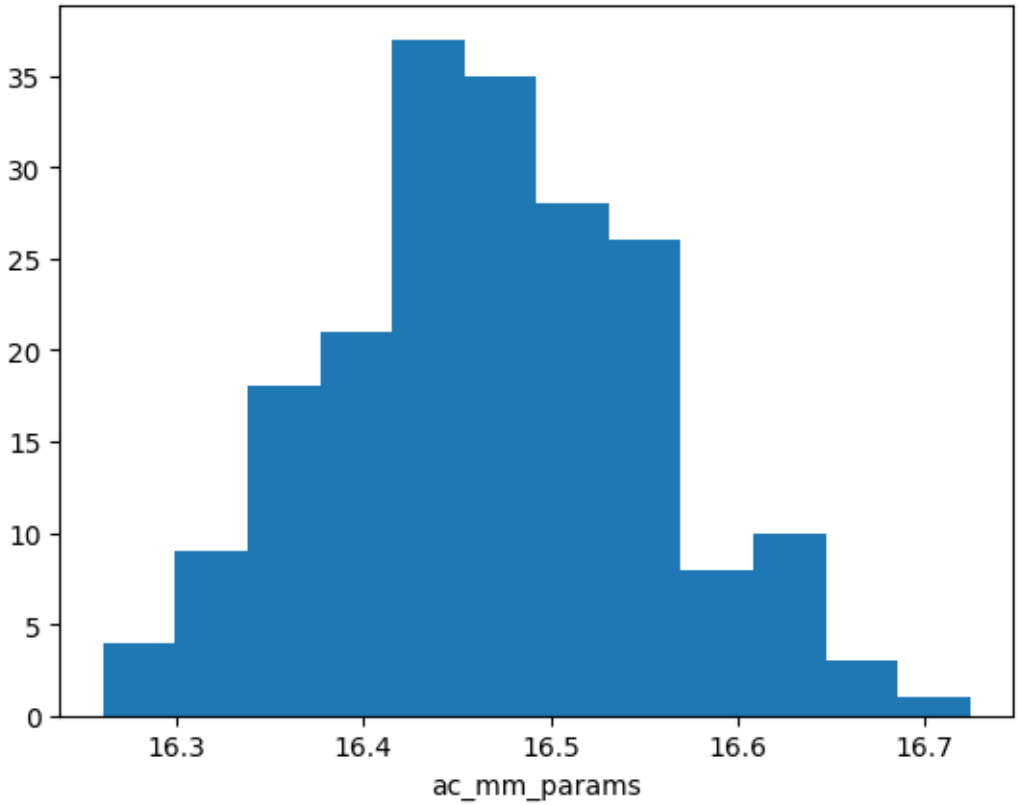

# CACE – Corner Frequency

- CL = 10pF

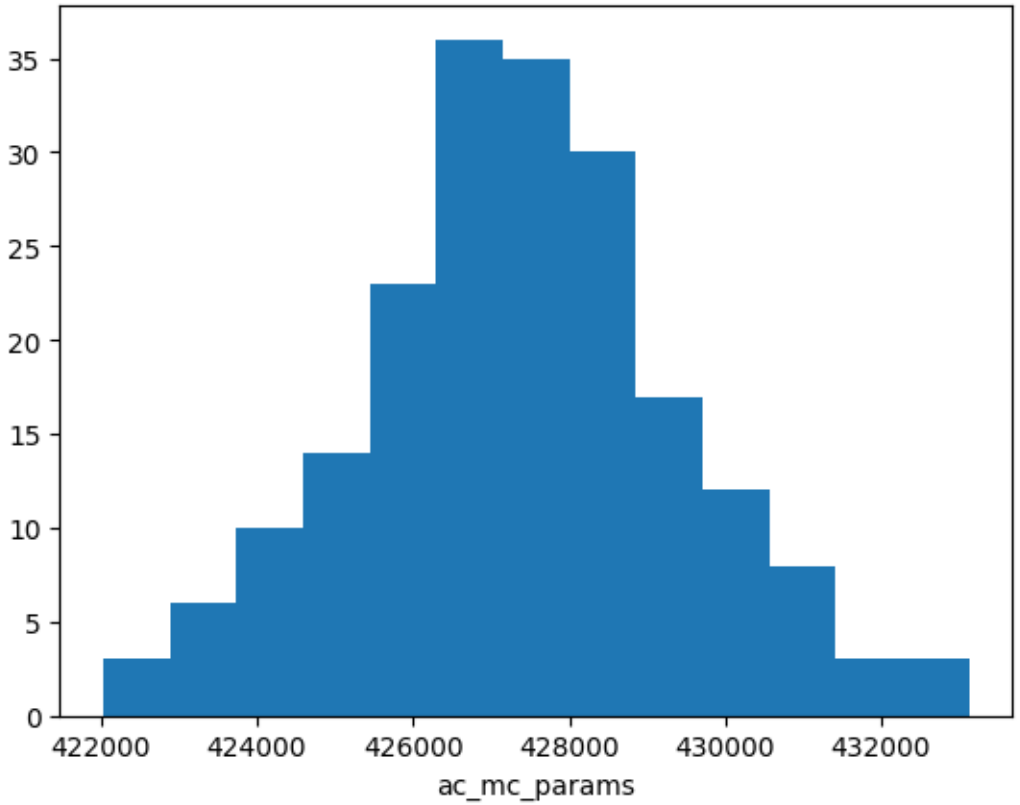


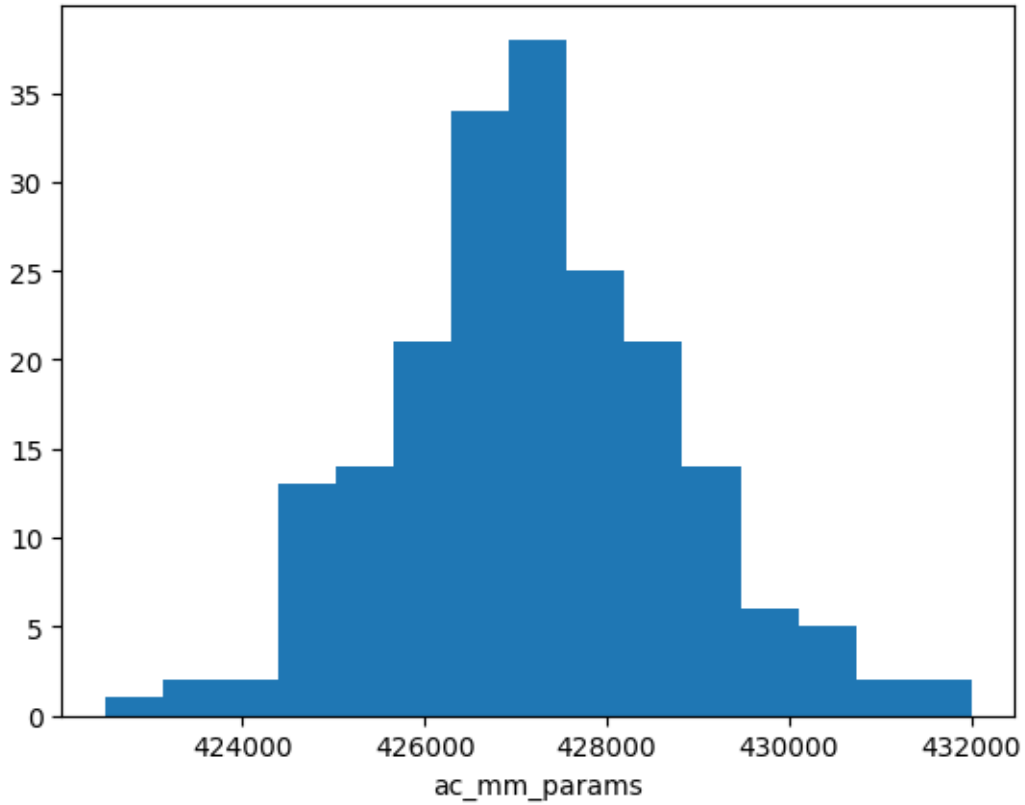

# AC Testbench – Loop Gain

- CL = 10pF

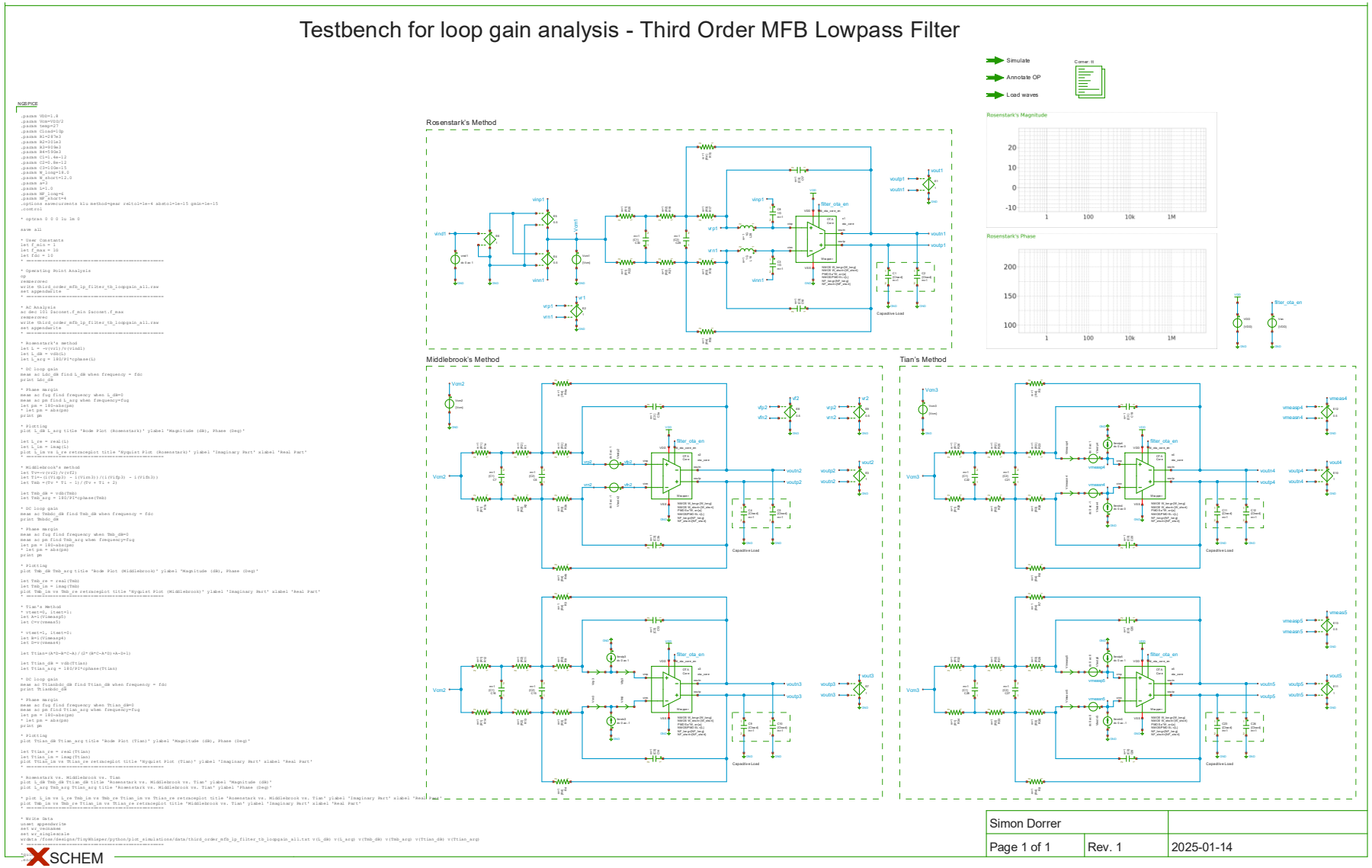

# AC Testbench – Loop Gain

- PM = 111°

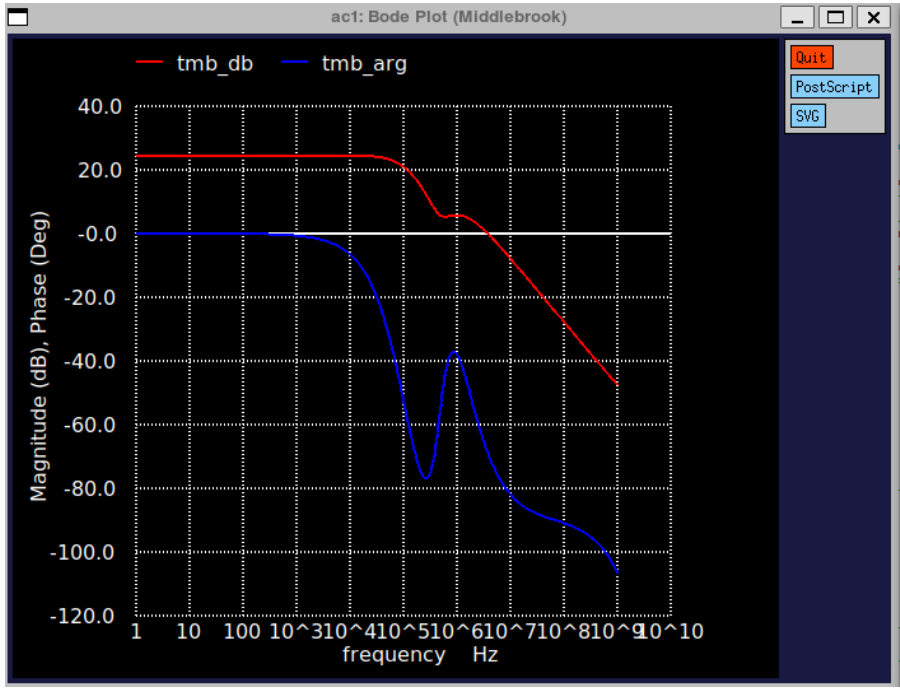


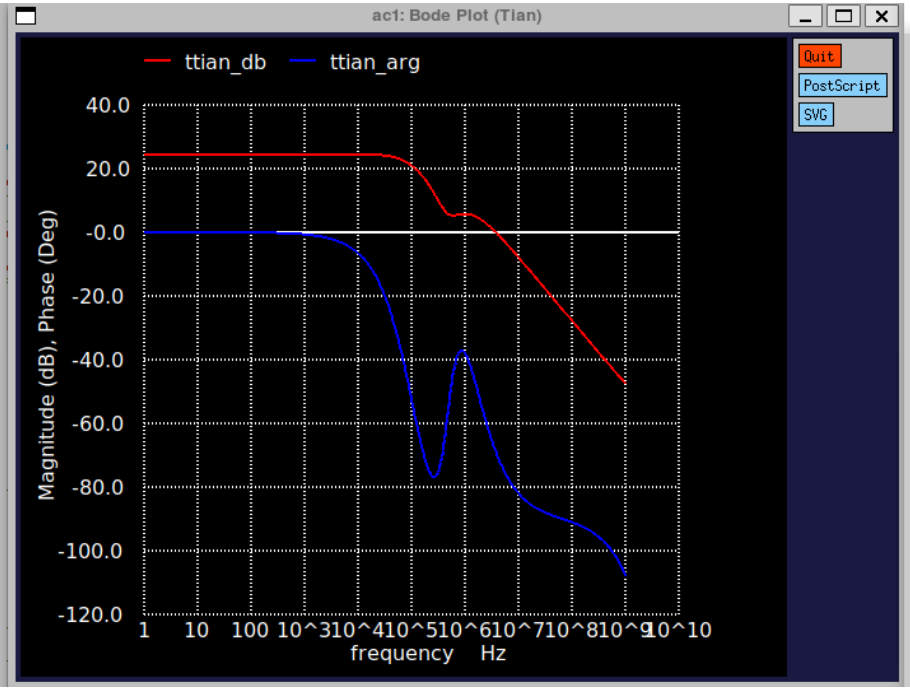

# Transient Testbench

- CL = 10pF

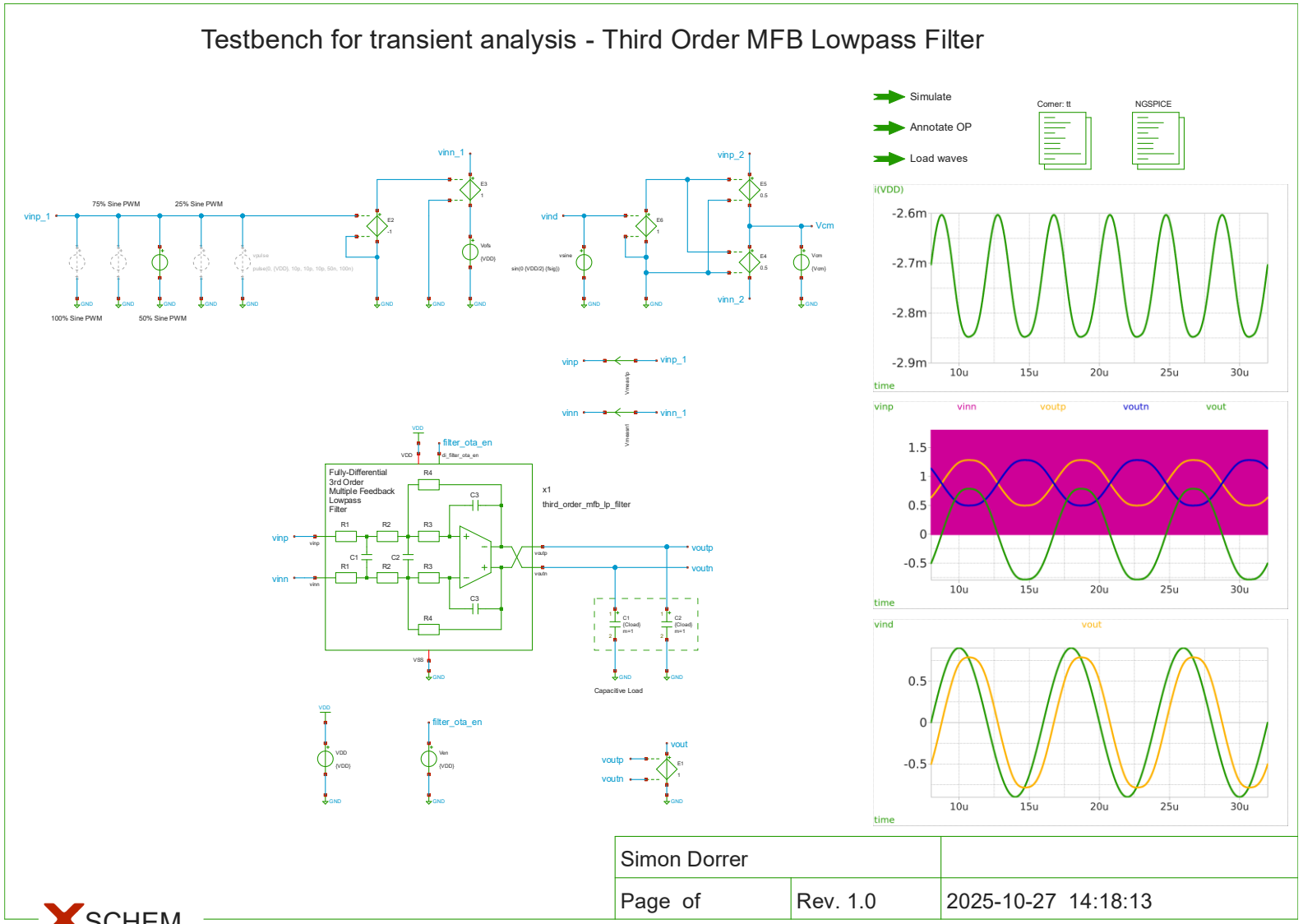

# Fourier-Reihe einer PWM Schwingung

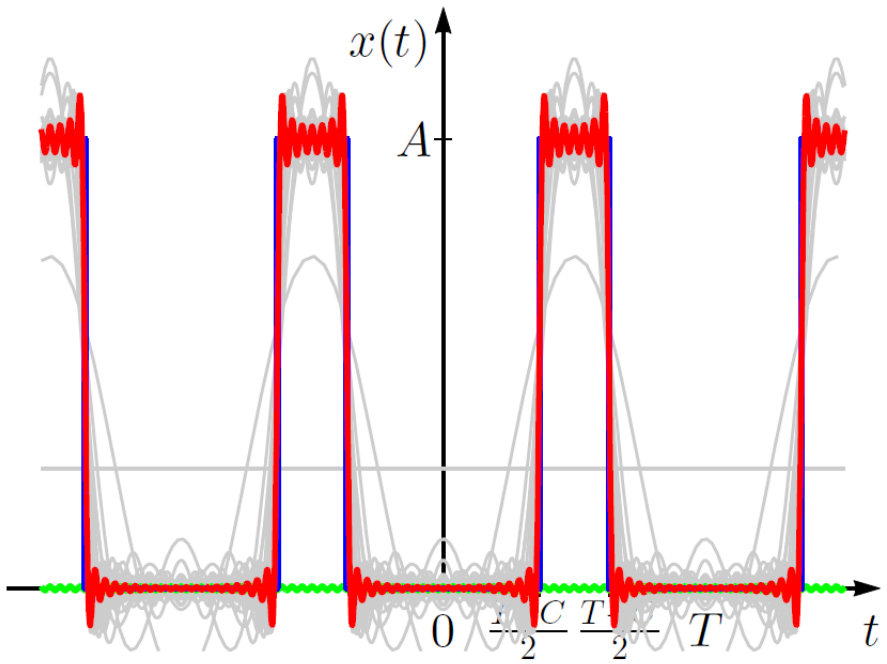


Zeitbereichssignal

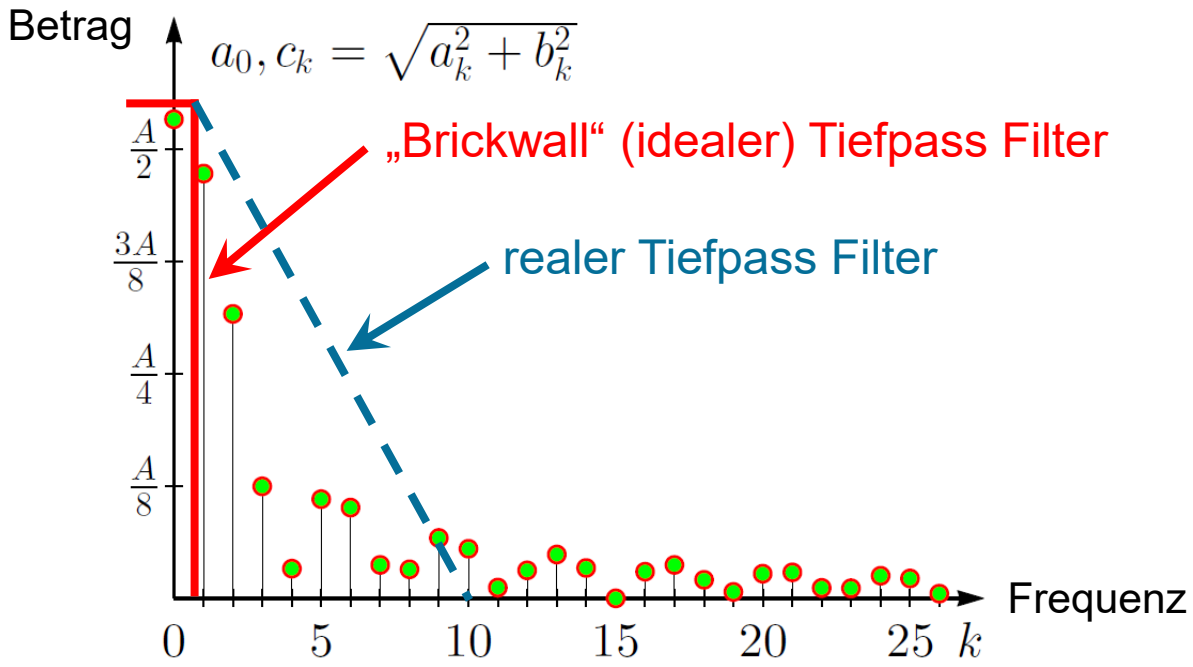


Harmonische

$$x(t) = \frac{AC}{T} + \frac{2A}{\pi} \sum_{k=1}^{\infty} \frac{(-1)^k}{k} \sin\left(k\pi \frac{C}{T}\right) \cos\left(k\omega_0 t\right)$$

Amplitude A, Pulsdauer C und Periodendauer T

# Simulation Results

- fsig = 125kHz (worst-case), fpwm = 56MHz, CL = 10pF

- Sine, 50% full-scale:

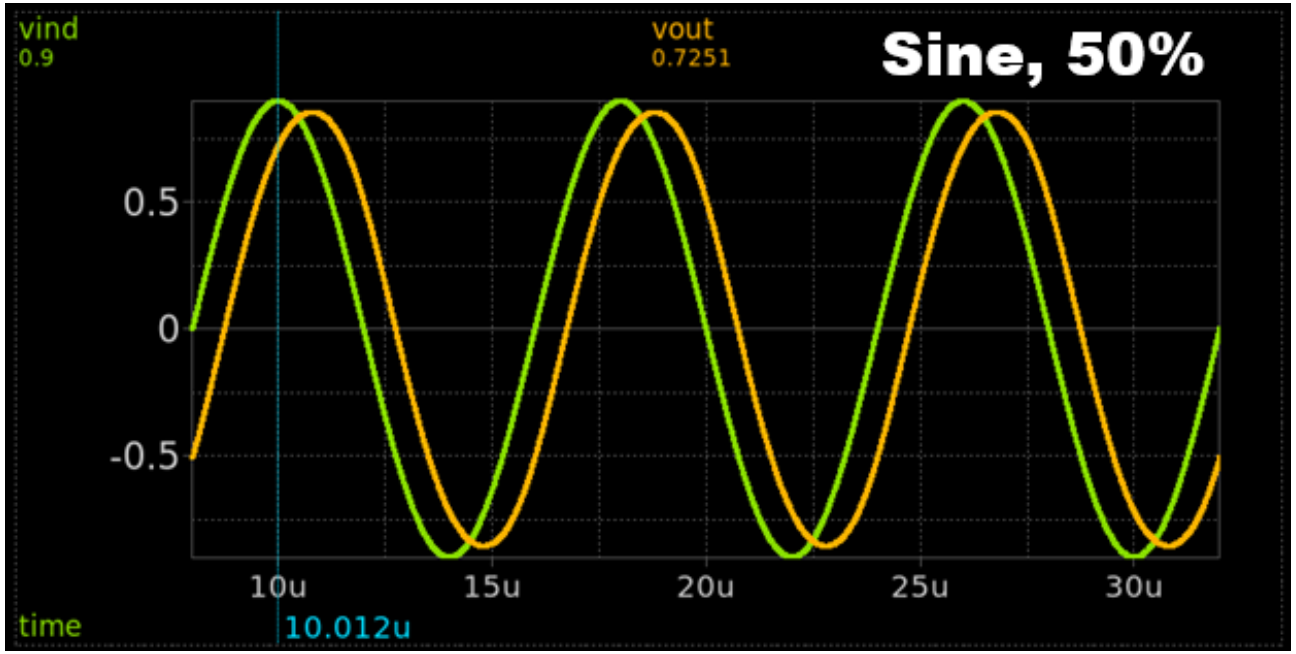


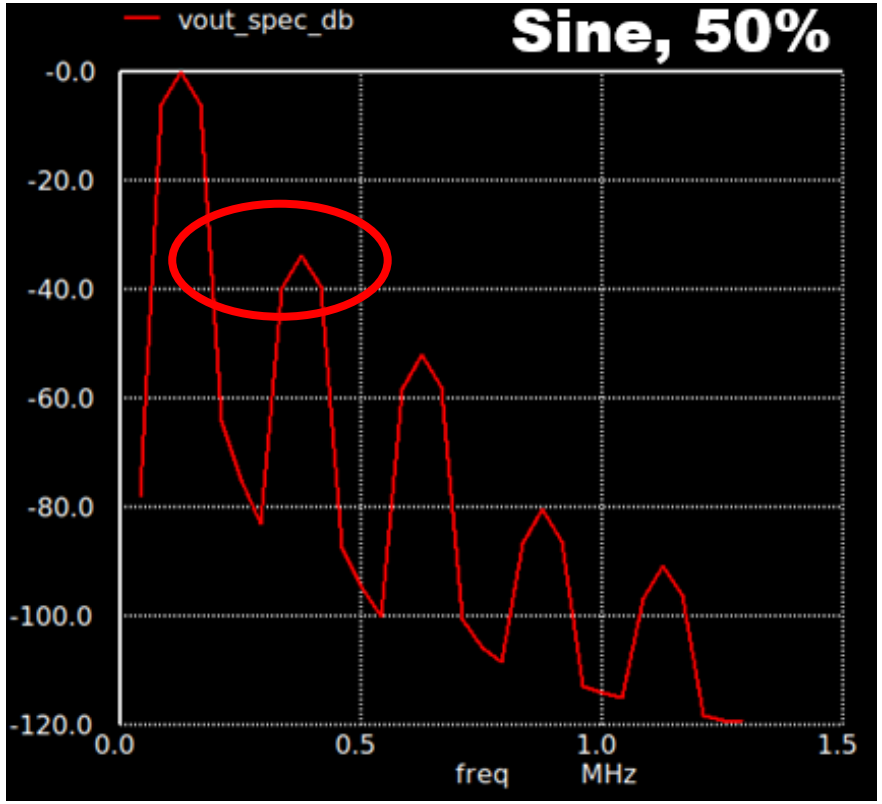

# Simulation Results

- fsig = 125kHz (worst-case), fpwm = 56MHz, CL = 10pF

- PWM, 100% full-scale:

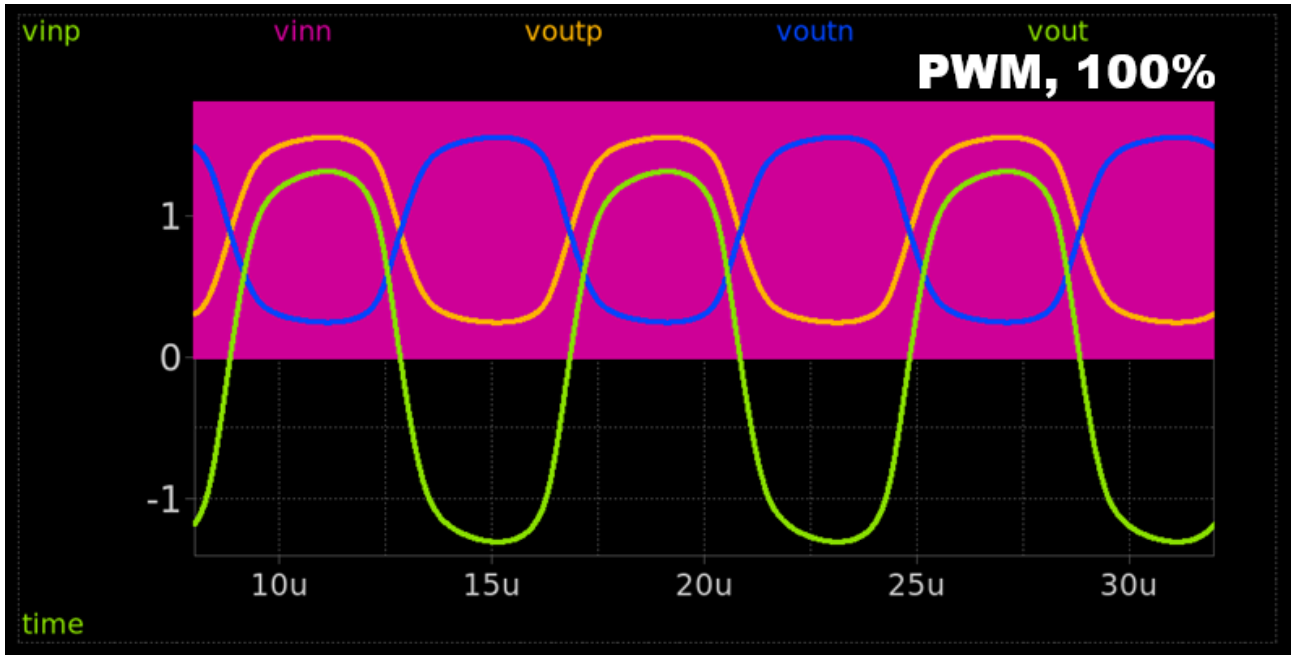


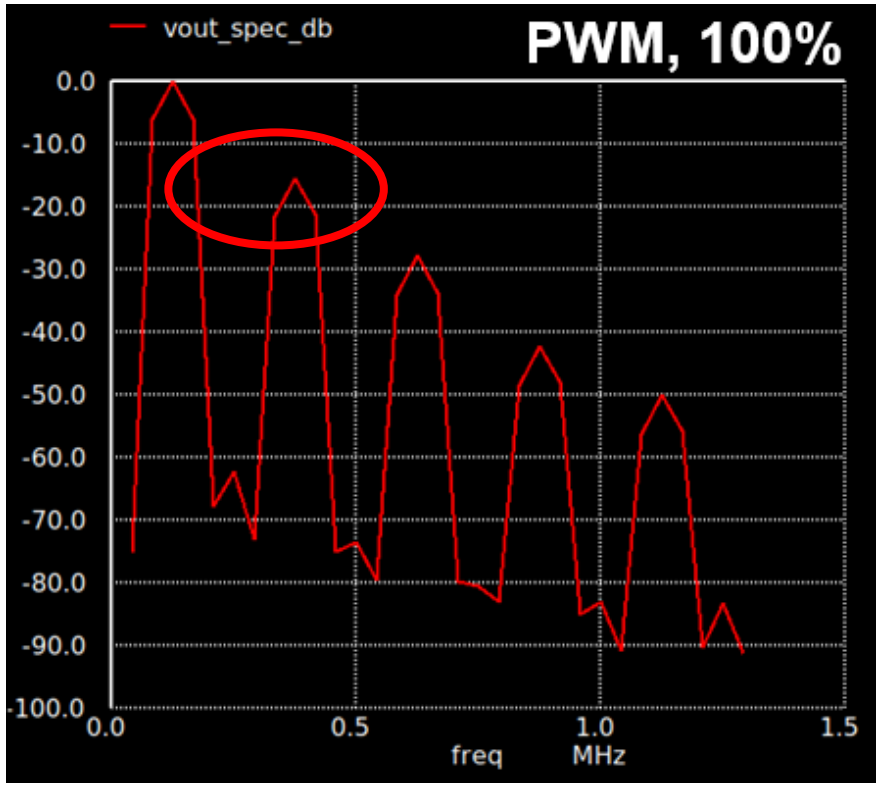

# Simulation Results

- fsig = 125kHz (worst-case), fpwm = 56MHz, CL = 10pF

- PWM, 75% full-scale:

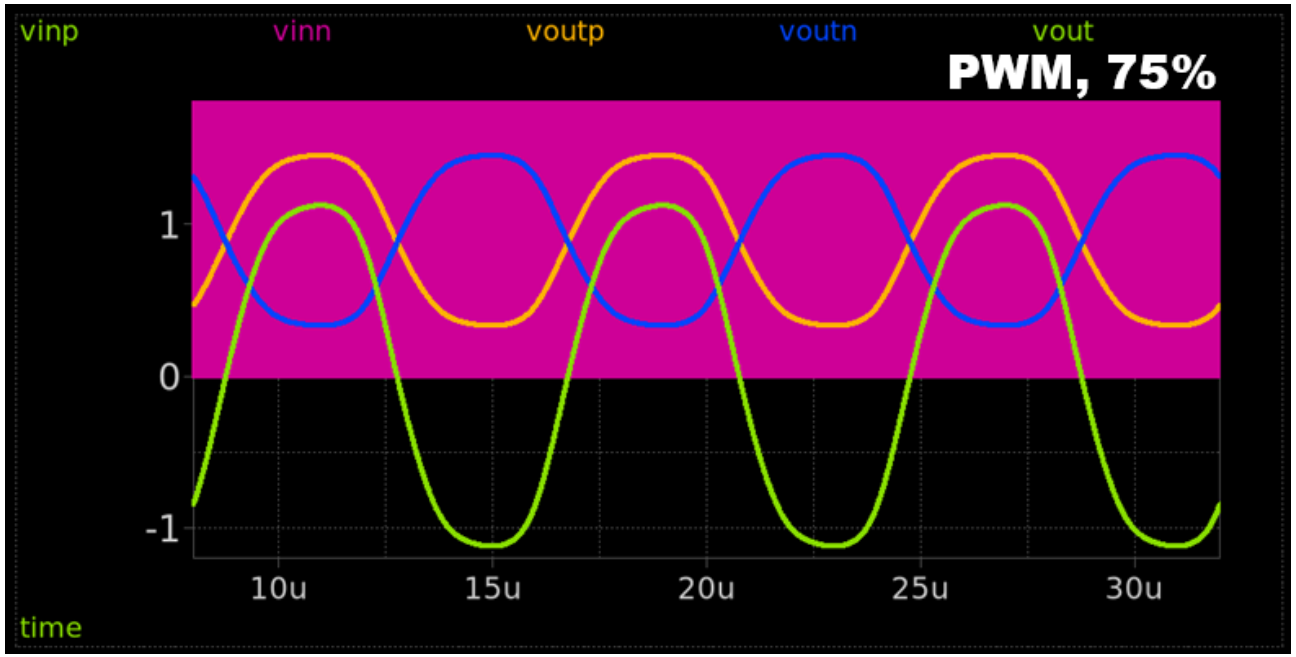


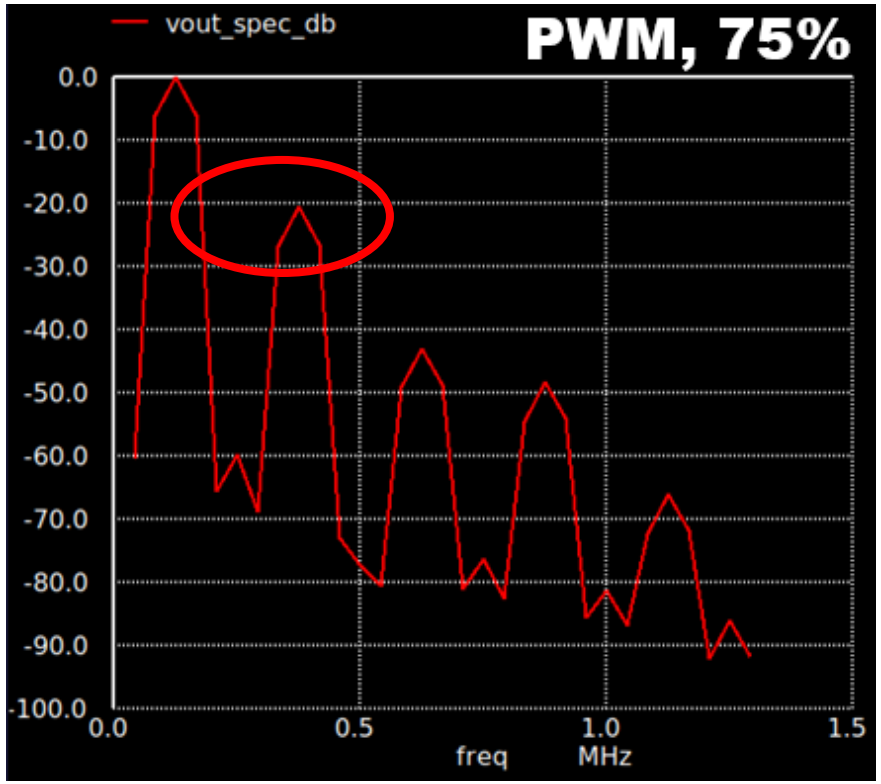

# Simulation Results

- fsig = 125kHz (worst-case), fpwm = 56MHz, CL = 10pF

- PWM, 50% full-scale:

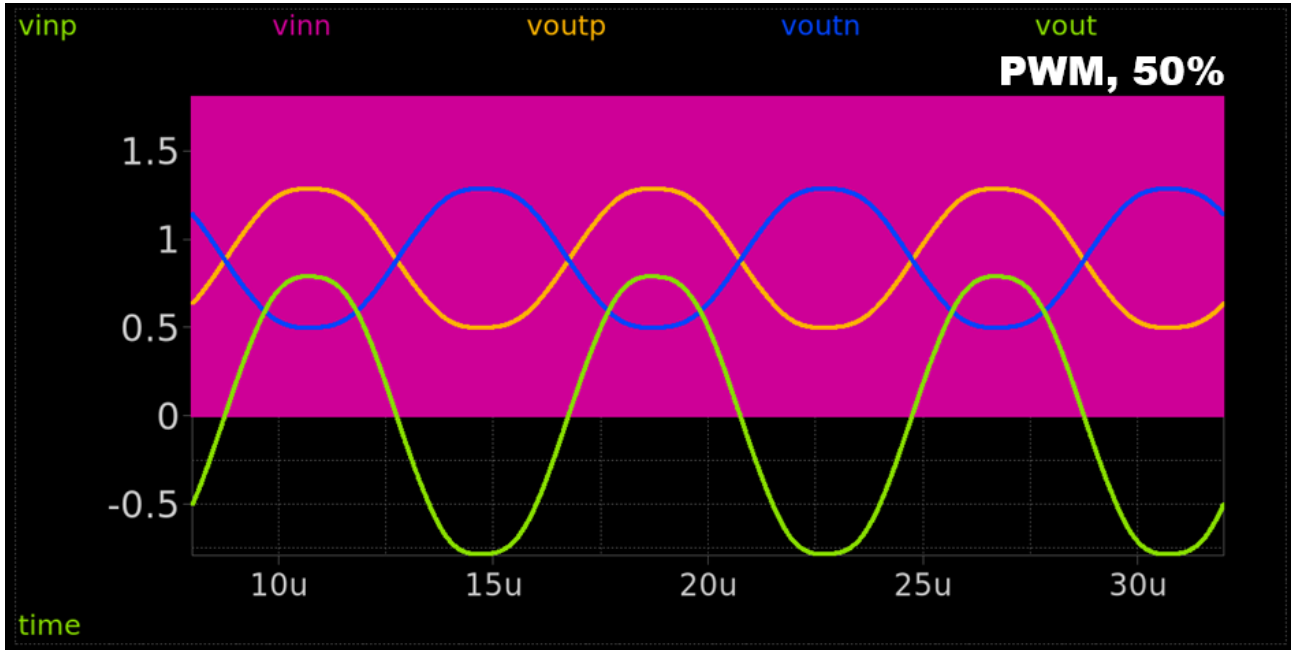


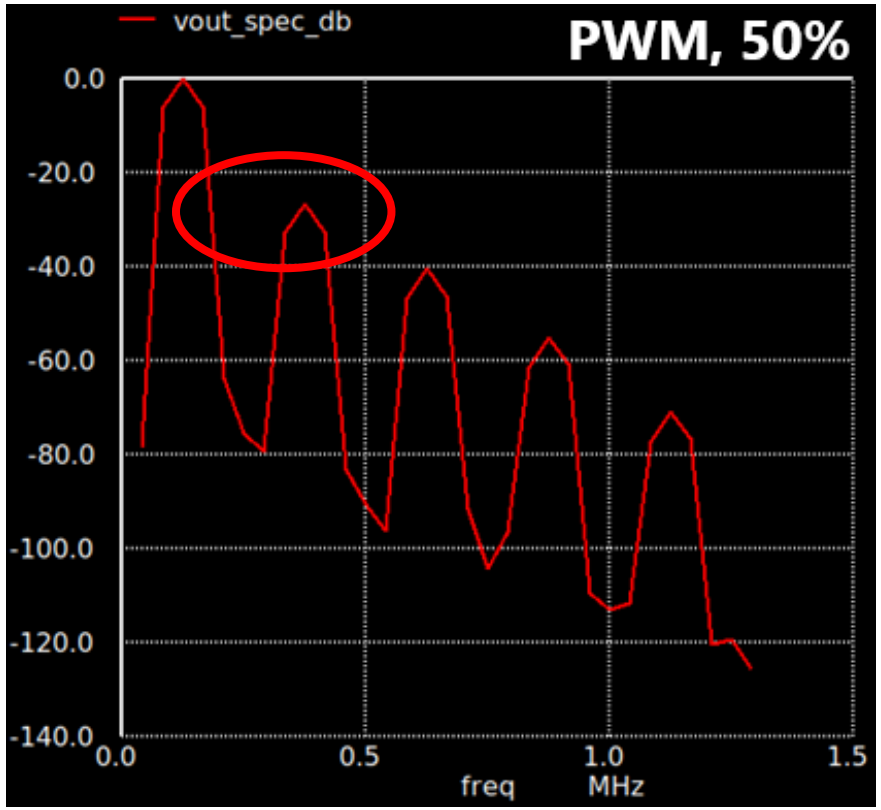

# Simulation Results

- fsig = 125kHz (worst-case), fpwm = 56MHz, CL = 10pF

- PWM, 25% full-scale:

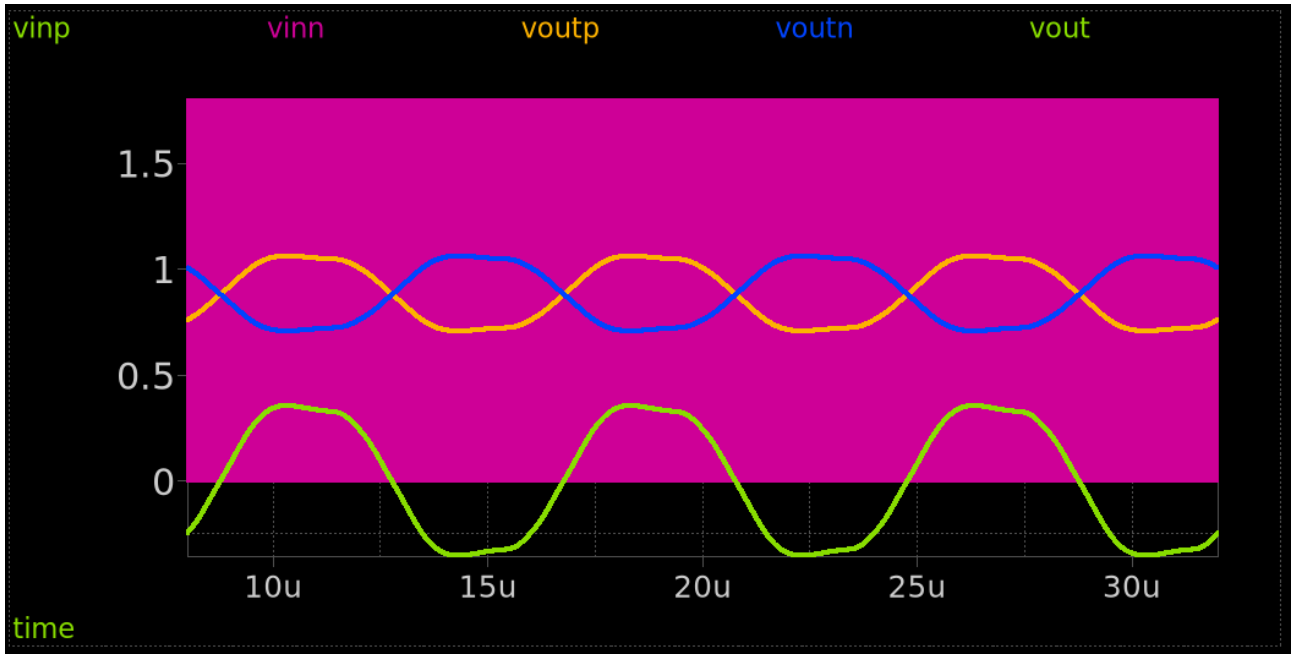


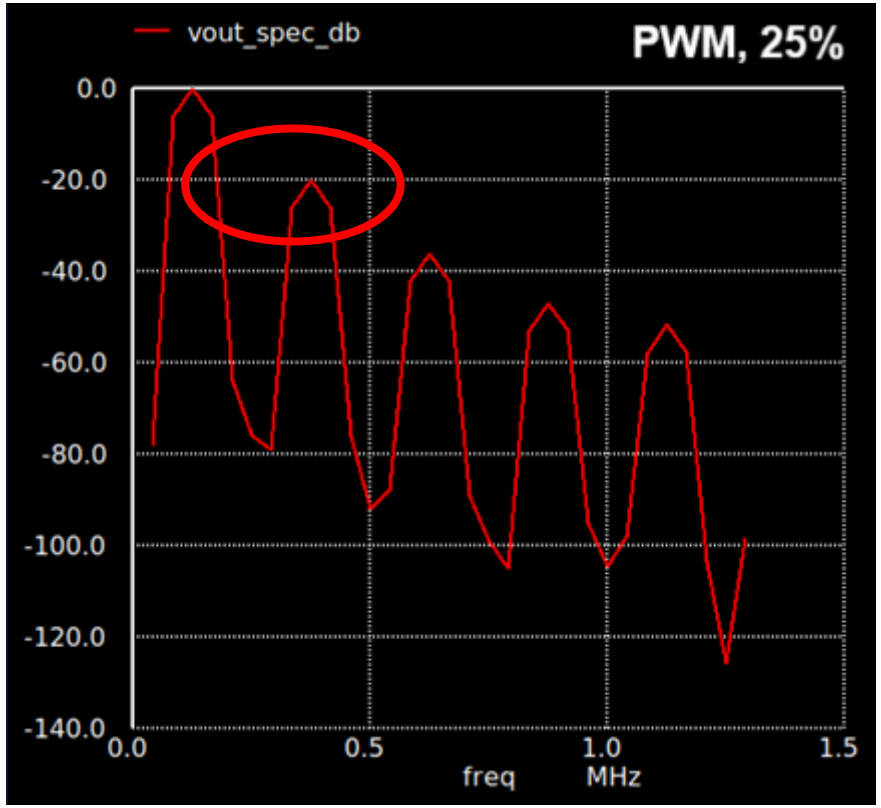


→ Why is 25% so bad?

# Voltage-Mode Passive Mixer

# Schematic – LO Logic

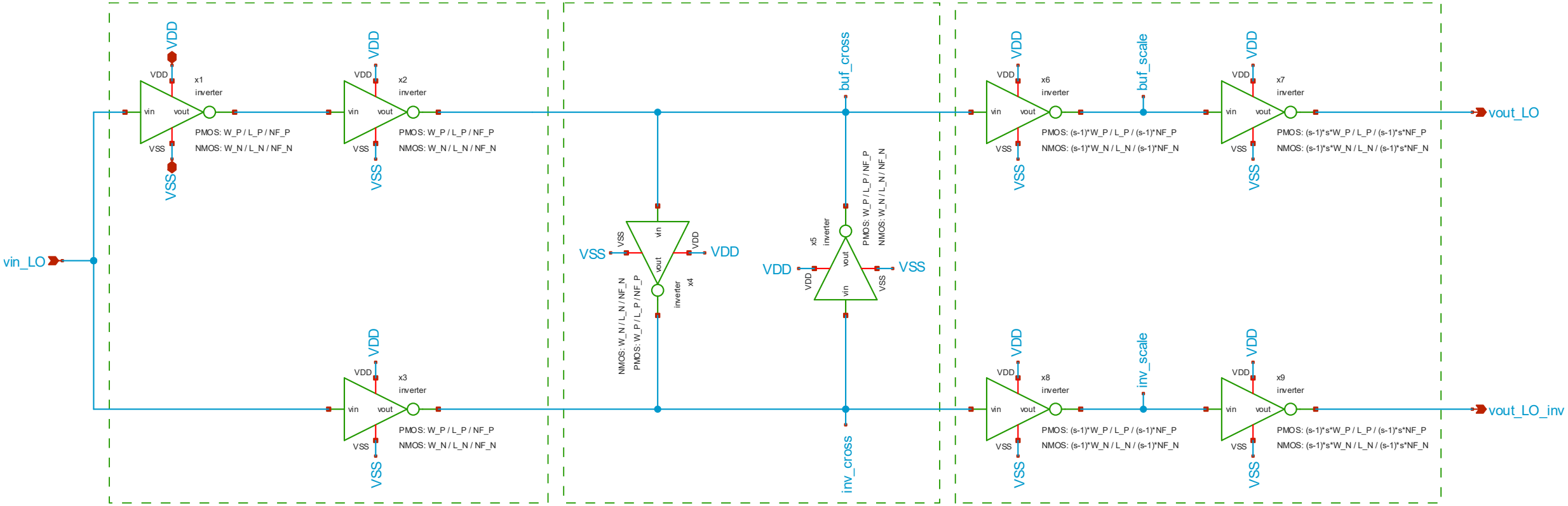

# Layout – LO Logic

- ToDo

# Schematic – Transmission Gate /w Dummy

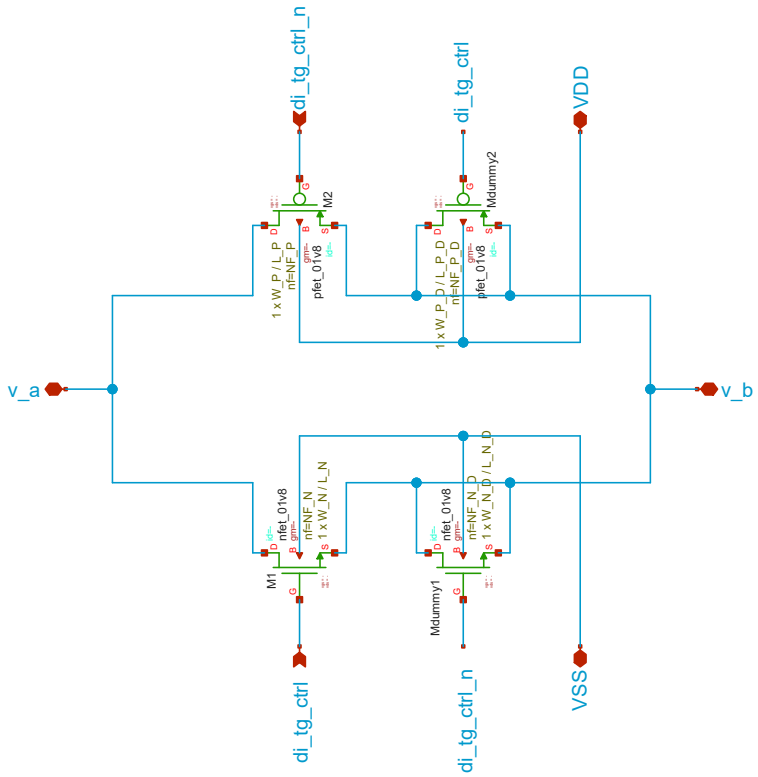


- ToDo

di_tg_ctrl = 1, di_tg_ctrl_n = 0: v_a connected to v_b
di_tg_ctrl = 0, di_tg_ctrl_n = 1: v_a = X, v_b = HIGH-Z

# Rdson – Transmission Gate /w Dummy

- Wp = 54um
- Wn = 18um
- W_NF = 3um
- L = 0.15um

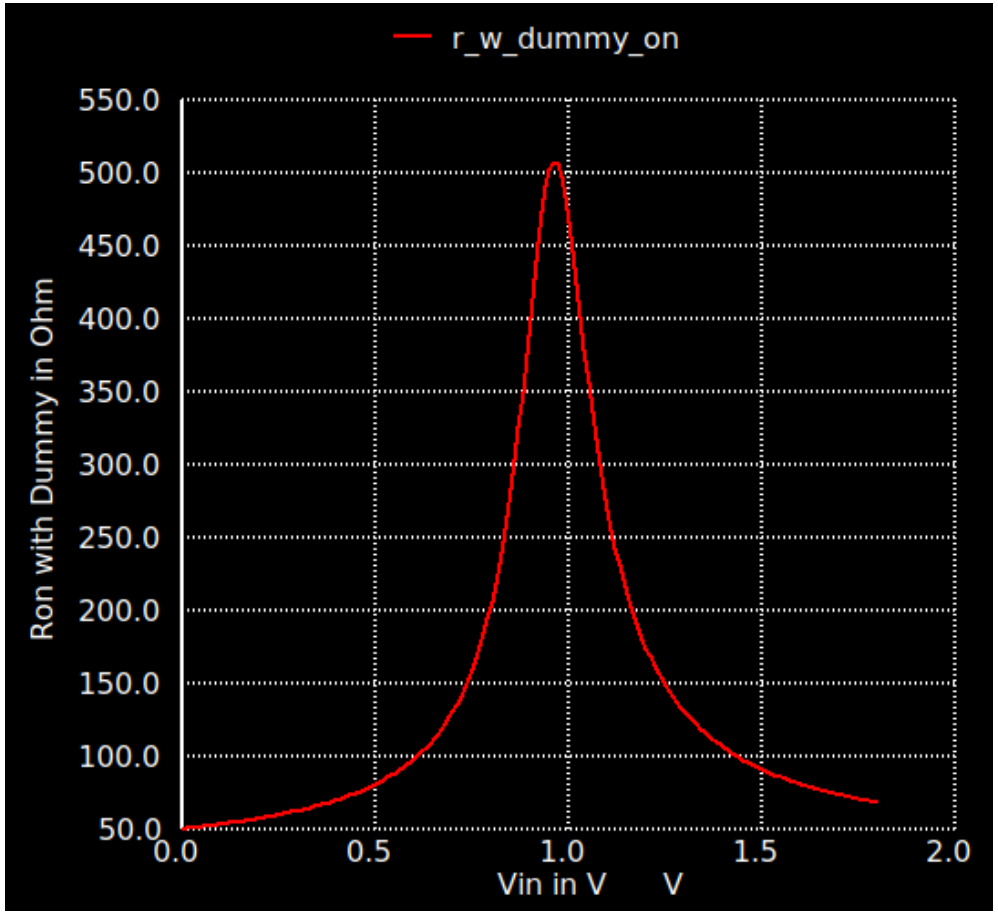

# Schematic

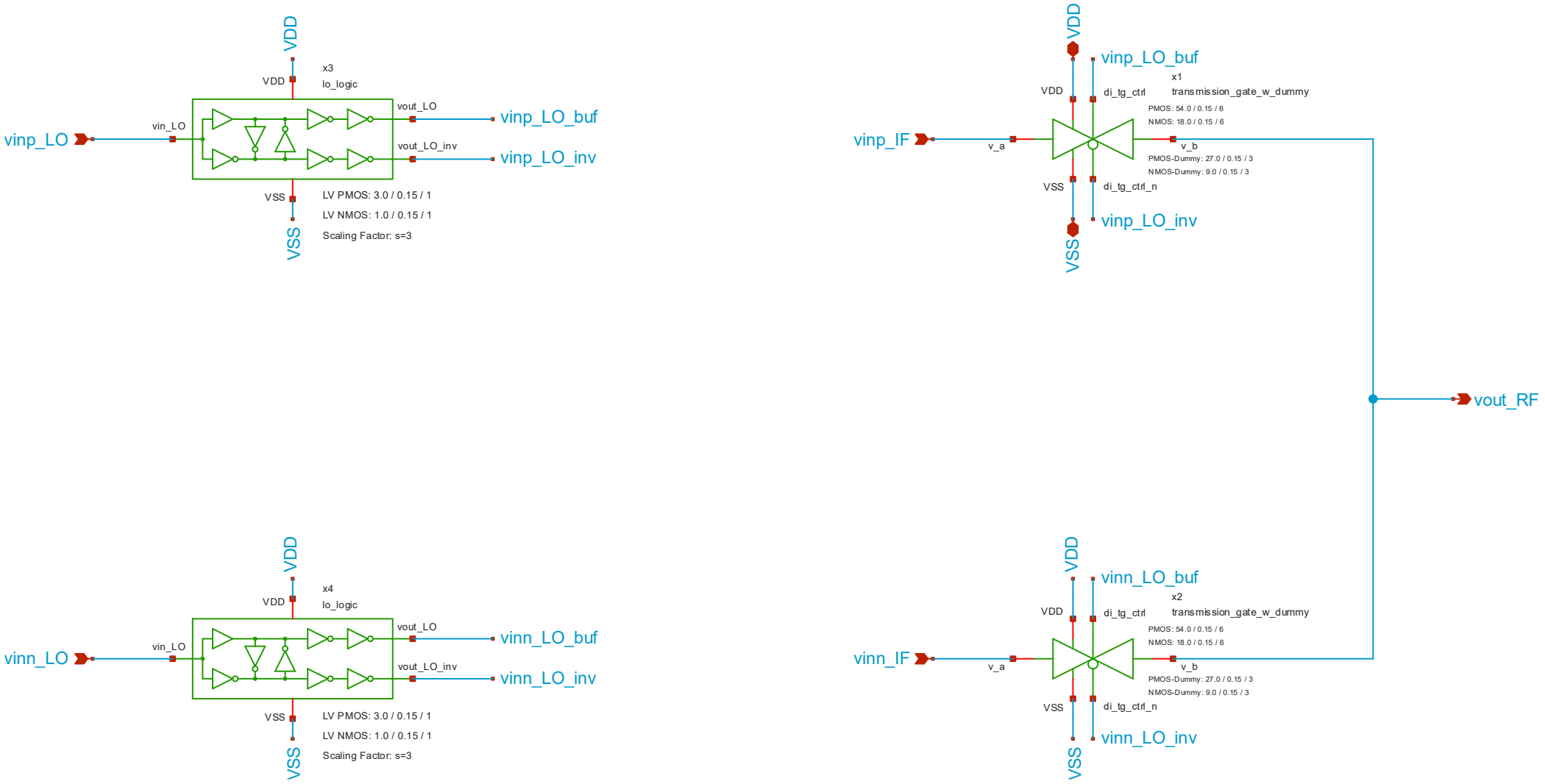
VDD
x3
lo_logic
VDD
vin_LO
vinp_LO
vout_LO
vinp_LO_buf
vout_LO_inv
vinp_LO_inv
VSS
LV PMOS: 3.0 / 0.15 / 1
LV NMOS: 1.0 / 0.15 / 1
Scaling Factor: s=3
VSS
VDD
vinp_LO_buf
x1
VDD
di_tg_ctrl
transmission_gate_w_dummy
PMOS: 54.0 / 0.15 / 6
NMOS: 18.0 / 0.15 / 6
vinp_IF
v_a
v_b
PMOS-Dummy: 27.0 / 0.15 / 3
NMOS-Dummy: 9.0 / 0.15 / 3
VSS
di_tg_ctrl_n
vinp_LO_inv
VSS
vout_RF
VDD
x4
lo_logic
VDD
vin_LO
vinn_LO
vout_LO
vinn_LO_buf
vout_LO_inv
vinn_LO_inv
VSS
LV PMOS: 3.0 / 0.15 / 1
LV NMOS: 1.0 / 0.15 / 1
Scaling Factor: s=3
VSS
VDD
vinn_LO_buf
x2
VDD
di_tg_ctrl
transmission_gate_w_dummy
PMOS: 54.0 / 0.15 / 6
NMOS: 18.0 / 0.15 / 6
vinn_IF
v_a
v_b
PMOS-Dummy: 27.0 / 0.15 / 3
NMOS-Dummy: 9.0 / 0.15 / 3
VSS
di_tg_ctrl_n
vinn_LO_inv
VSS

# Layout

- ToDo

# Transient Testbench

- Cin = 10pF
- RL = 1k
- CL = 1pF

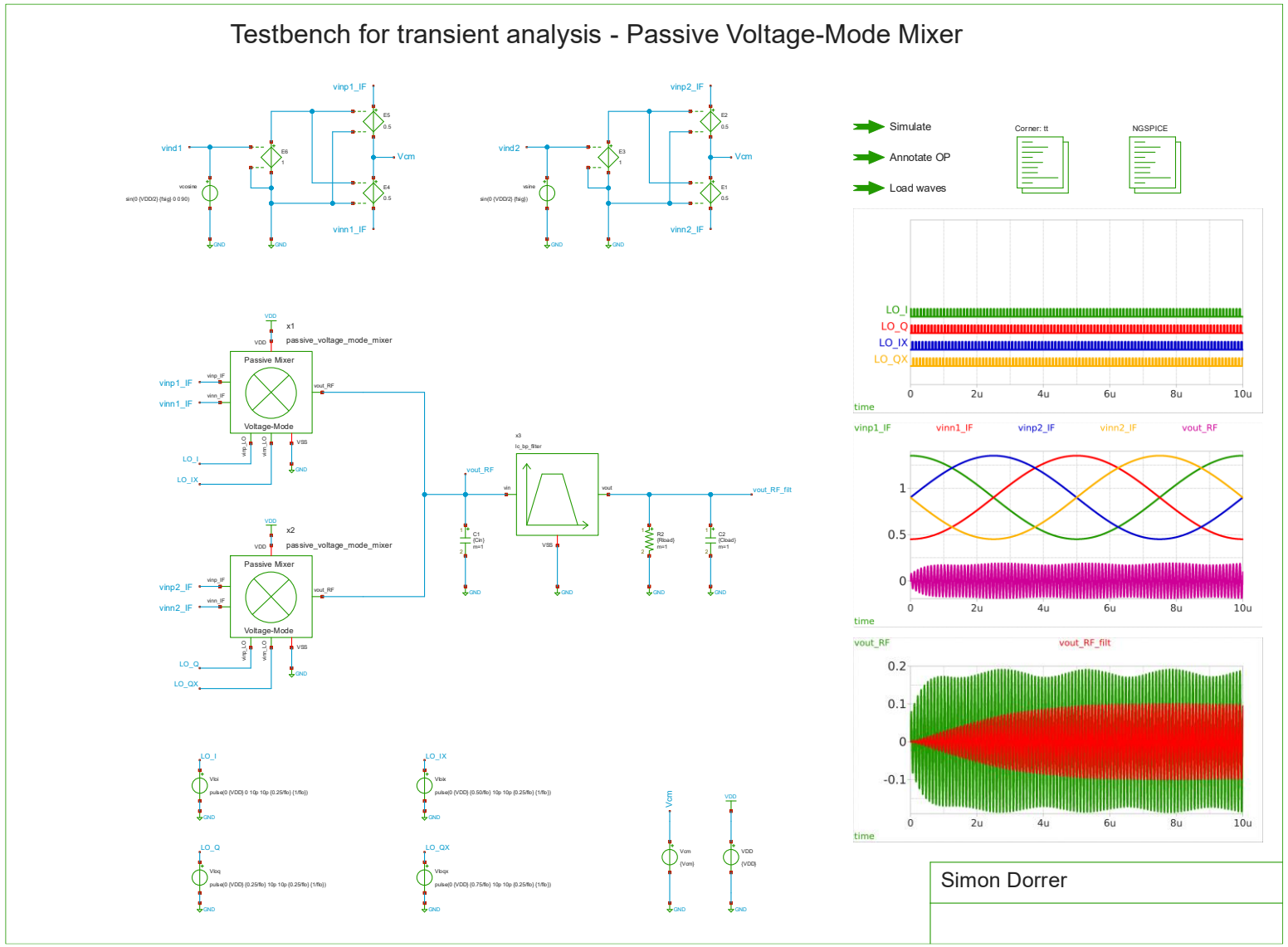


Simon Dorrer

# Simulation Results

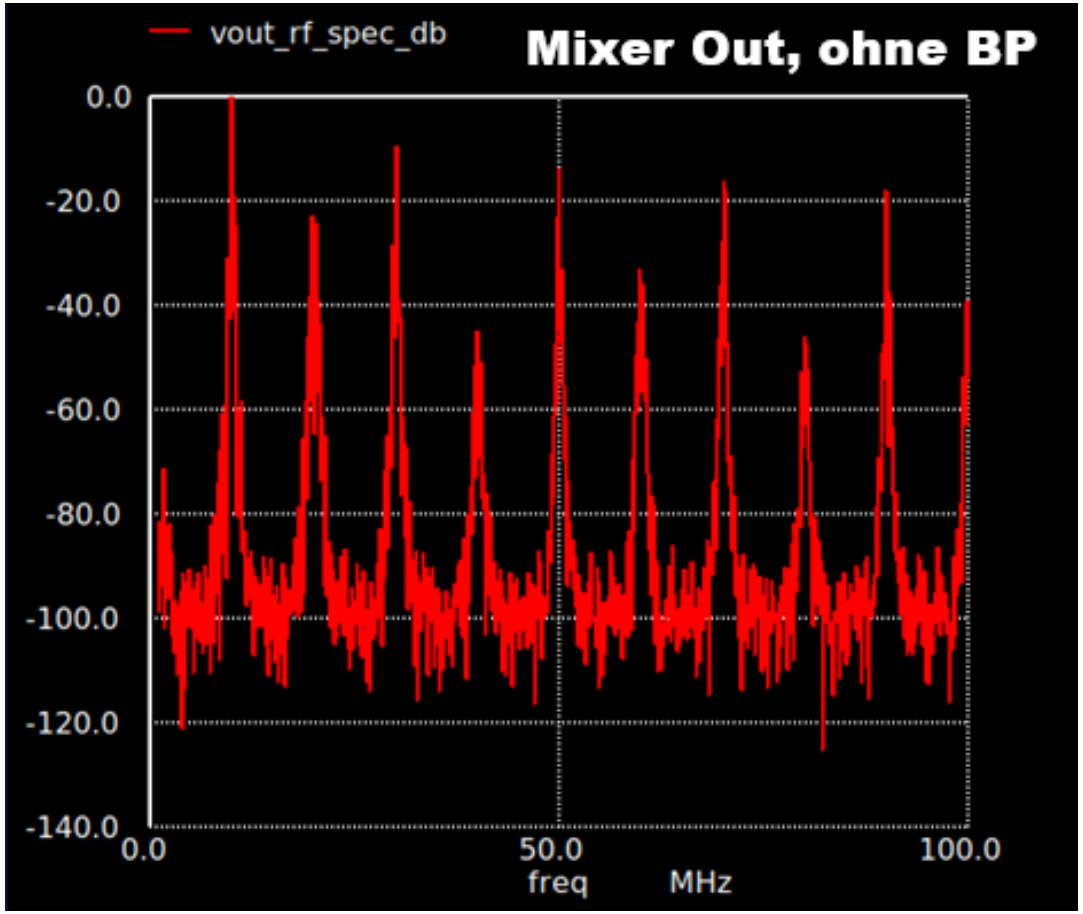


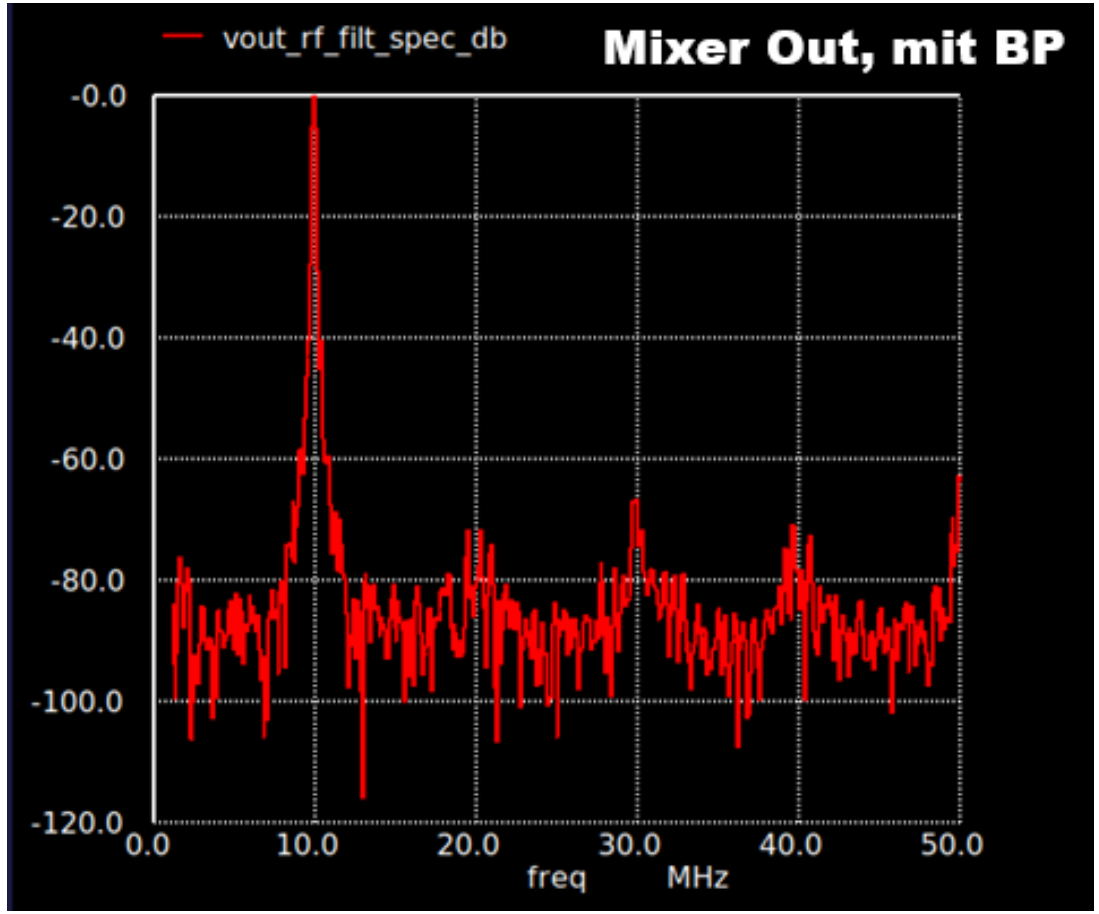

# External 3rd Order LC Bandpass Filter

# Design in „Elsie”

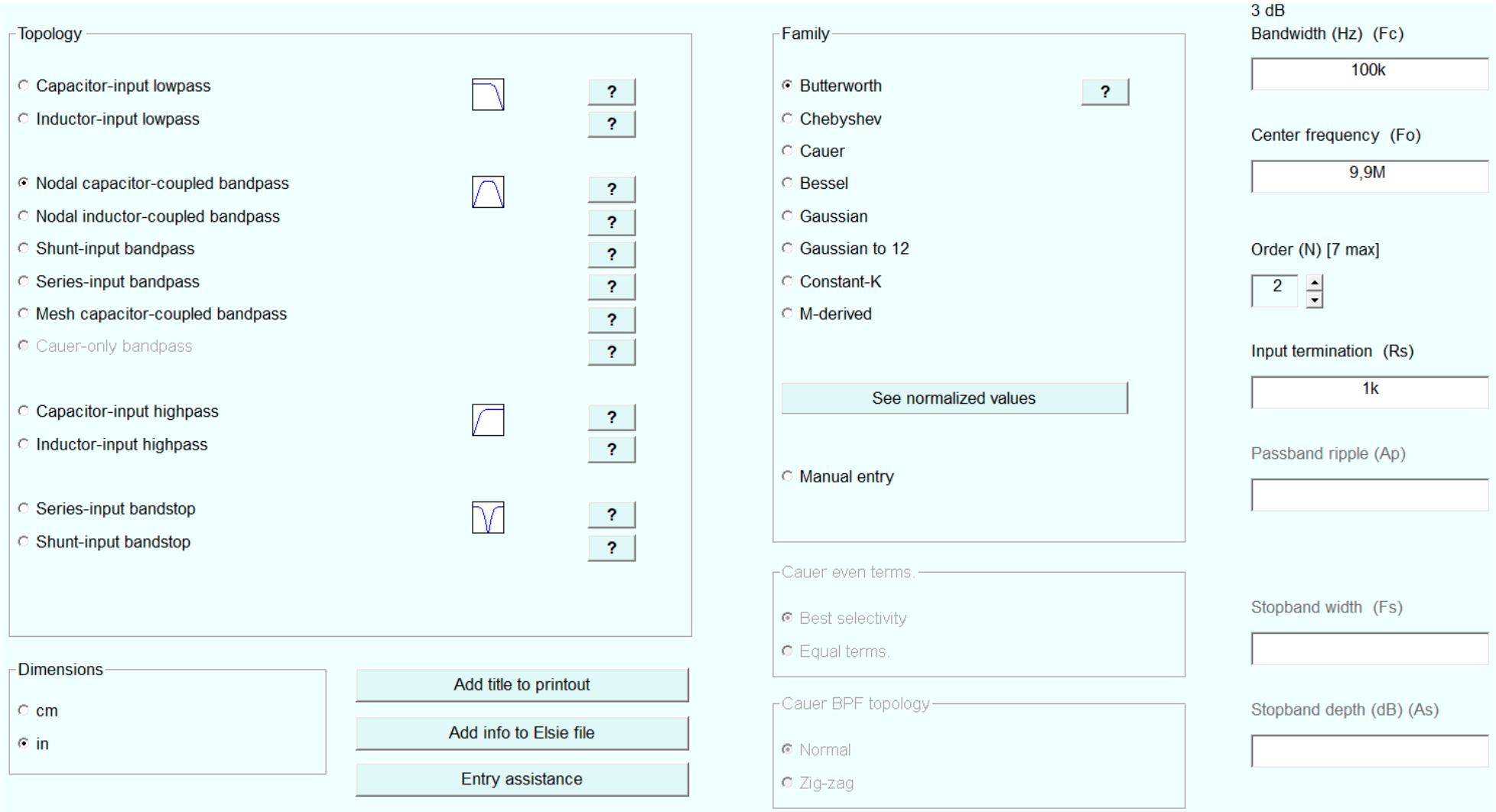

# Schematic

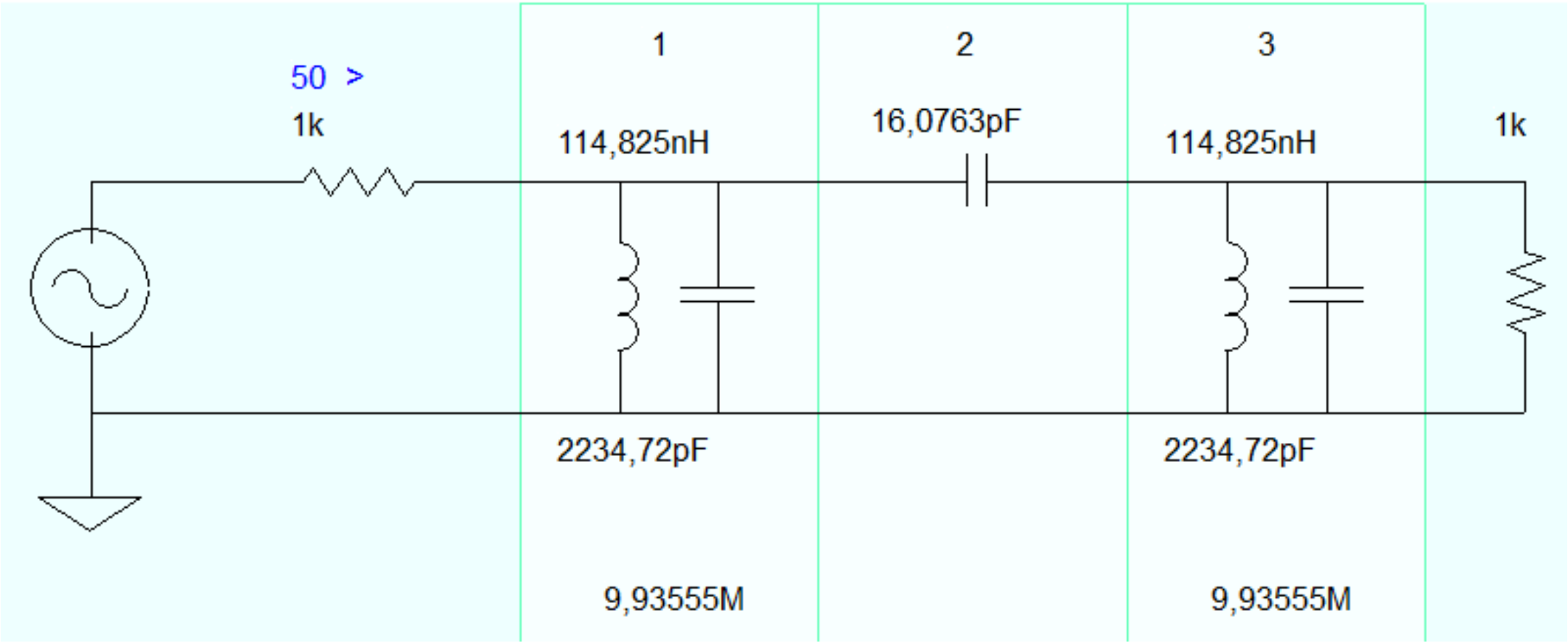
50 >
1k
1
114,825nH
2234,72pF
9,93555M
2
16,0763pF
3
114,825nH
2234,72pF
9,93555M
1k

# Simulation Results

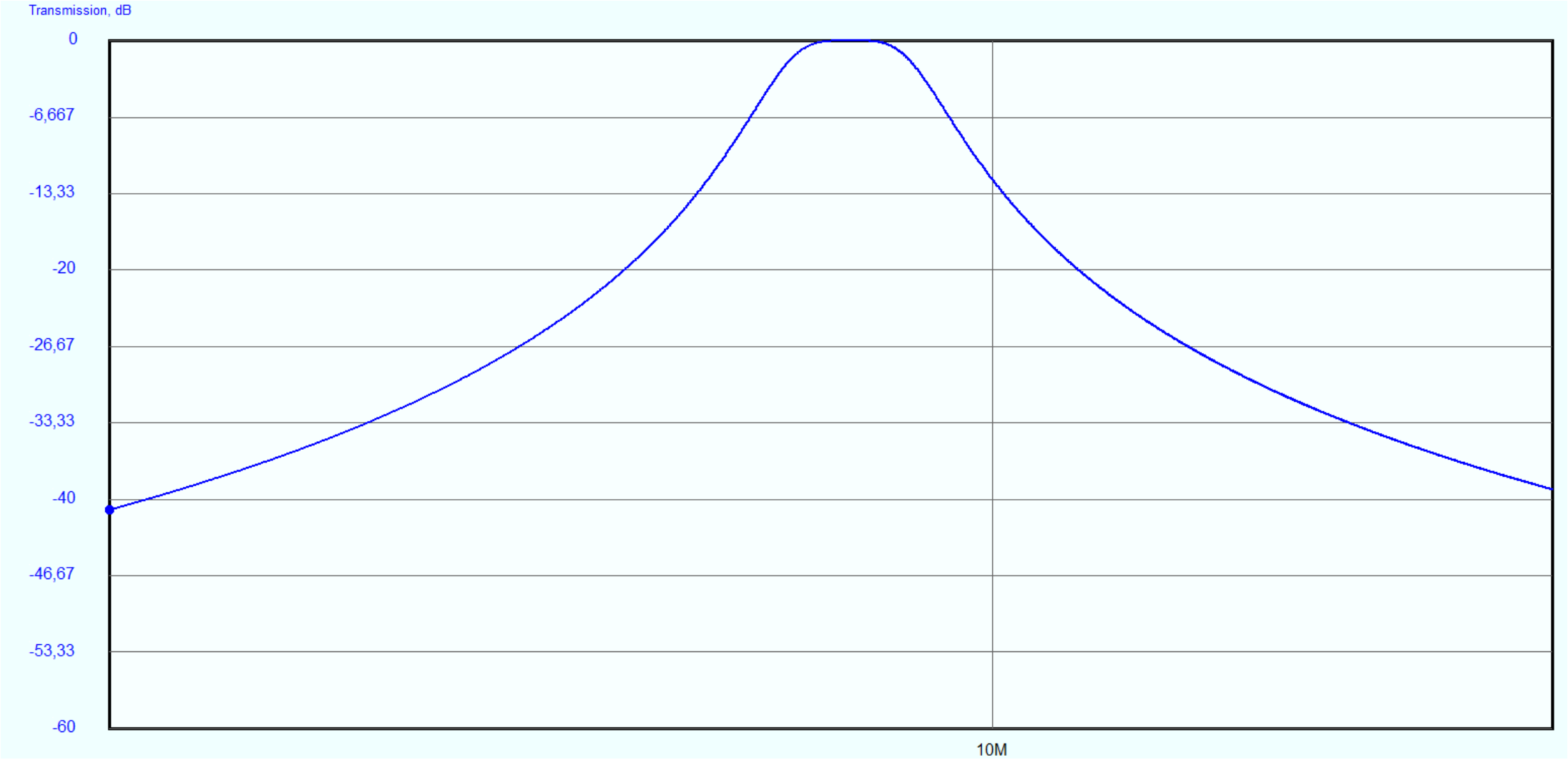

# Simulation Results

Testbench for AC analysis - LC Bandpass Filter

NGSPICE

```
.param temp=27
.param Rin=1k
.param Cin=10p
.param Rload=1k
.param Cload=1p
.options savecurrents klu method=gear reltol=1e-3 abstol=1e-15 gmin=1e-15
.control

save all

set wr_vecnames
set wr_singlescale

* User Constants
let f_min = 9.4e6
let f_max = 10.4e6
let fdc = 9.9e6

* Operating Point Analysis
op
remzerovec
write lc_bp_filter_tb_ac.raw
set appendwrite

* AC Analysis
ac dec 10001 $&const.f_min $&const.f_max
remzerovec
write lc_bp_filter_tb_ac.raw
set appendwrite

* Plotting
let Amag = v(vout)/v(vin)
let Amag_dB = vdb(Amag)
let Aarg = 180/PI*cphase(Amag)

plot Amag_dB ylabel 'Magnitude'
plot Aarg ylabel 'Phase'
plot Amag_dB Aarg ylabel 'Magnitude, Phase'

* Measurements
meas ac Adc_cl_dB find Amag_dB when frequency = fdc
print Adc_cl_dB

let Amag_fc = Adc_cl_dB-3
meas ac fcl find frequency when Amag_dB = Amag_fc RISE=1
print fcl

meas ac fcu find frequency when Amag_dB = Amag_fc FALL=1
print fcu

* Write Data
unset appendwrite
set wr_vecnames
set wr_singlescale
wrdata /foss/designs/TinyWhisper/python/plot_simulations/data/lc_bp_filter_tb_ac.txt v(Amag_dB) v(Aarg)

*quit
.end c
```

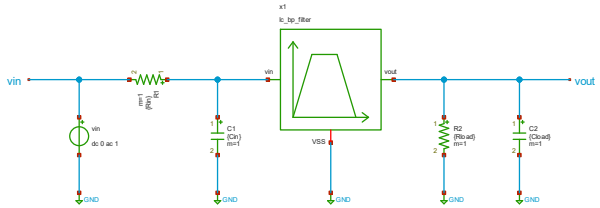


Simulate

Annotate OP

Load waves

Corner: tt

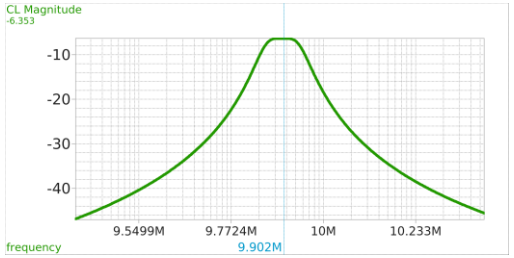


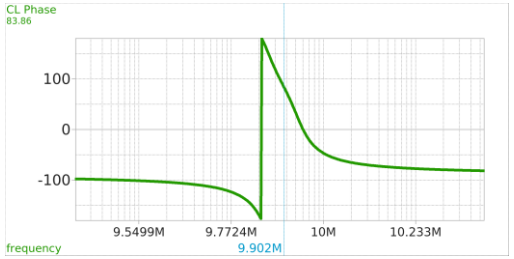


| | | |
|---|---|---|
| Simon Dorrer | | |
| Page of | Rev. 1.0 | 2025-10-25 15:58:54 |

XSCHEM

JOHANNES KEPLER UNIVERSITÄT LINZ

# IQ Modulator

# Schematic

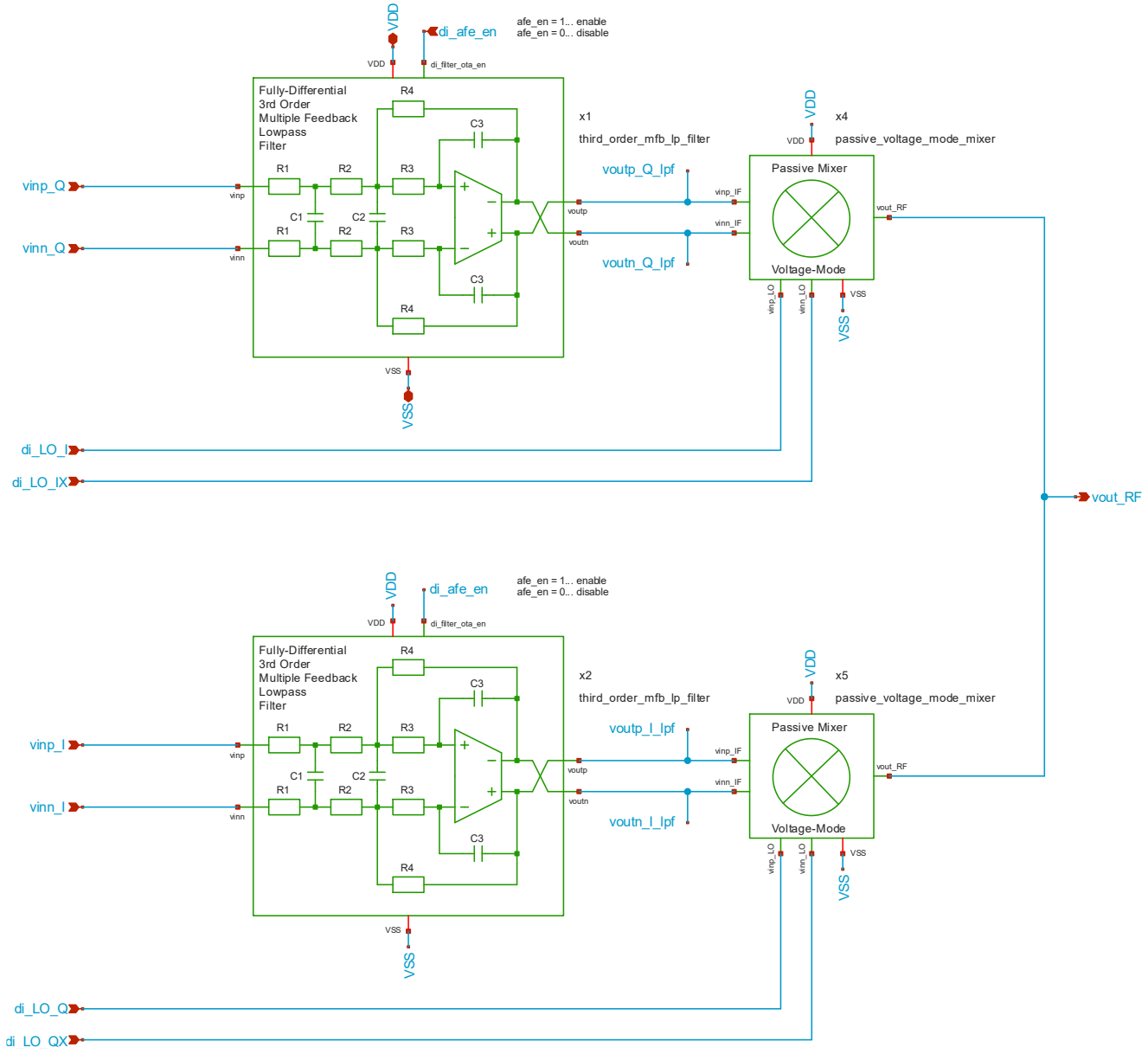
VDD
di_afe_en
afe_en = 1... enable
afe_en = 0... disable
VDD
di_filter_ota_en
Fully-Differential
3rd Order
Multiple Feedback
Lowpass
Filter
R4
C3
R1
R2
R3
C1
C2
R1
R2
R3
C3
R4
vinp
vinn
VSS
VSS
vinp_Q
vinn_Q
x1
third_order_mfb_lp_filter
voutp
voutn
voutp_Q_lpf
voutn_Q_lpf
VDD
x4
passive_voltage_mode_mixer
VDD
Passive Mixer
vinp_IF
vinn_IF
vout_RF
Voltage-Mode
vinp_LO
vinn_LO
VSS
VSS
di_LO_I
di_LO_IX
vout_RF
VDD
di_afe_en
afe_en = 1... enable
afe_en = 0... disable
VDD
di_filter_ota_en
Fully-Differential
3rd Order
Multiple Feedback
Lowpass
Filter
R4
C3
R1
R2
R3
C1
C2
R1
R2
R3
C3
R4
vinp
vinn
VSS
VSS
vinp_I
vinn_I
x2
third_order_mfb_lp_filter
voutp
voutn
voutp_I_lpf
voutn_I_lpf
VDD
x5
passive_voltage_mode_mixer
VDD
Passive Mixer
vinp_IF
vinn_IF
vout_RF
Voltage-Mode
vinp_LO
vinn_LO
VSS
VSS
di_LO_Q
di_LO_QX

# Layout

under construction (200um x 80um)!

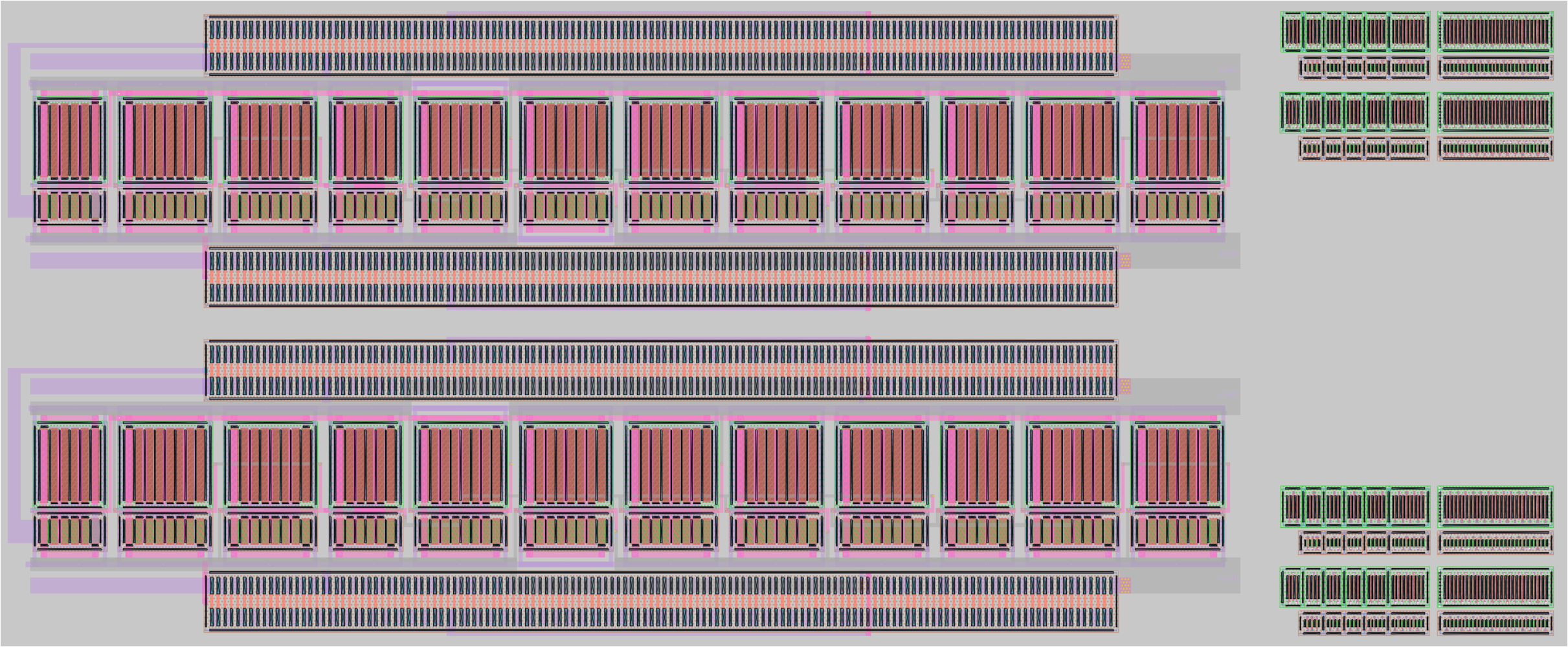

# Transient Testbench

- Cin = 10pF
- RL = 10k
- CL = 1pF

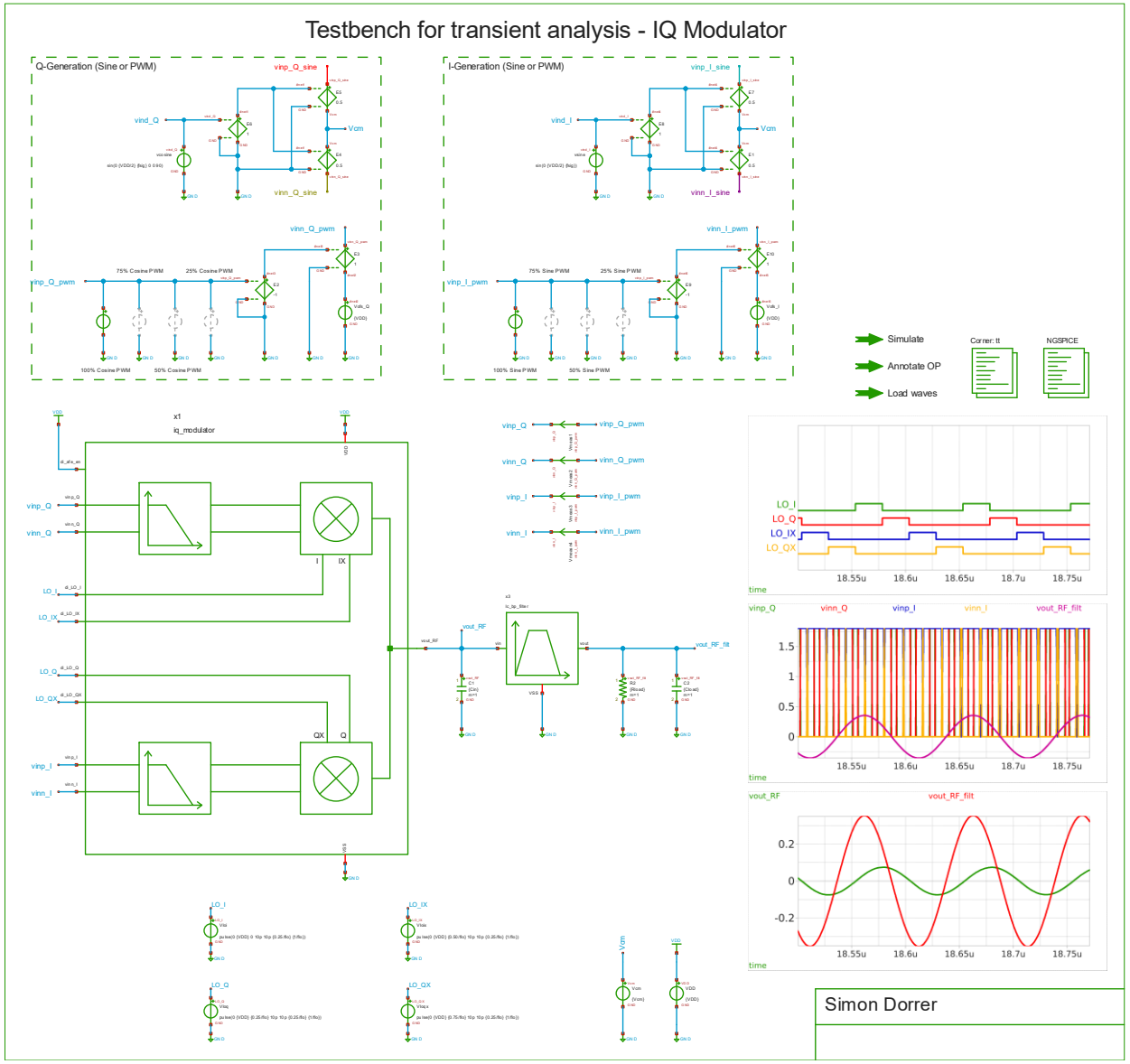

# Simulation Results

- fsig = 125kHz (worst-case), fpwm = 56MHz, flo = 10.025MHz

- PWM, 100% full-scale:

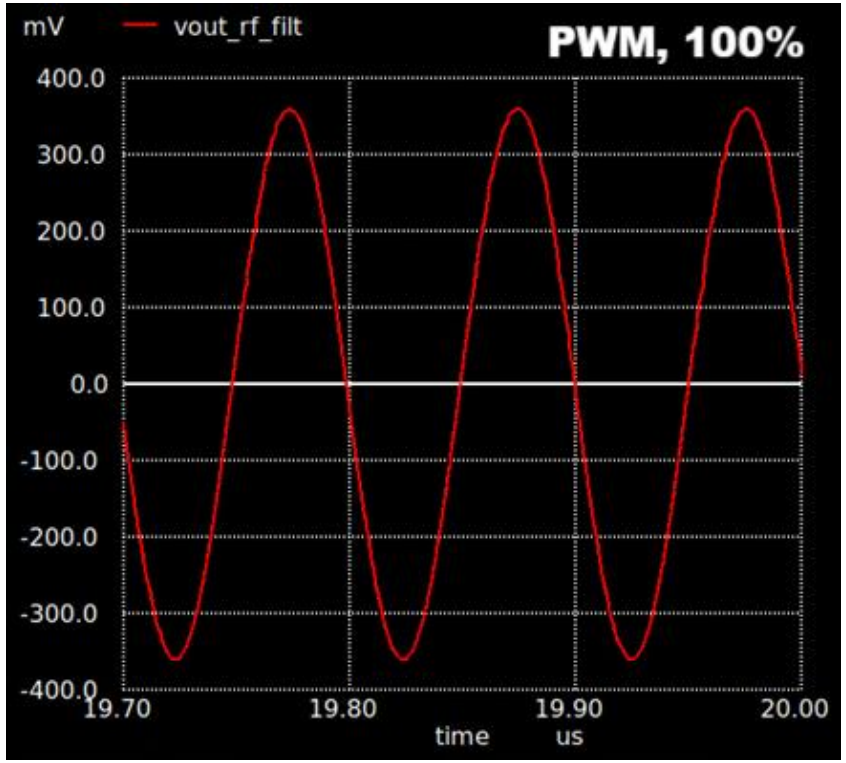


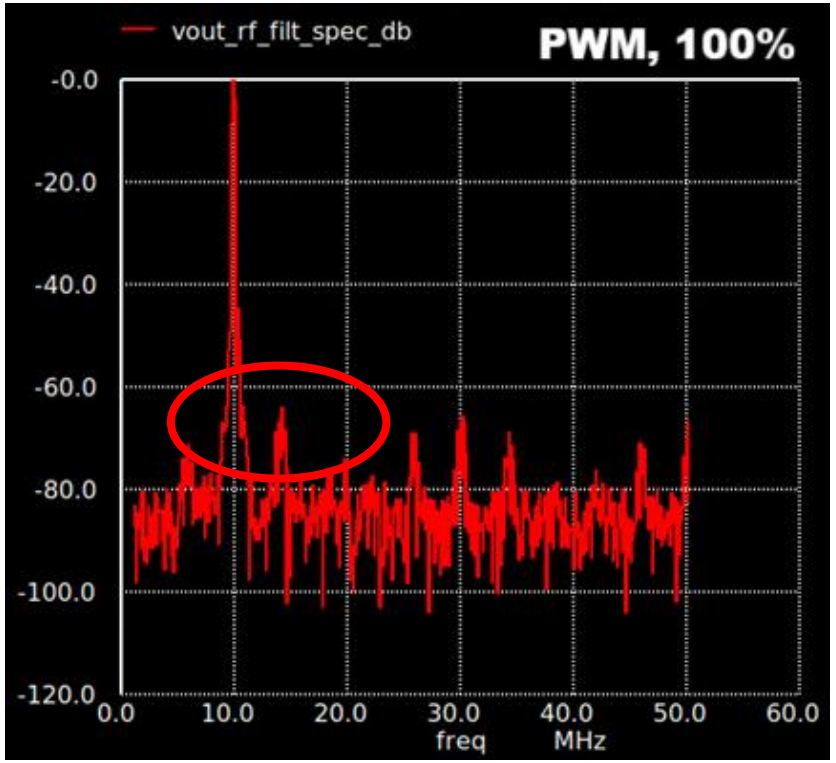

# Simulation Results

- fsig = 125kHz (worst-case), fpwm = 56MHz, flo = 10.025MHz

- PWM, 100% full-scale:

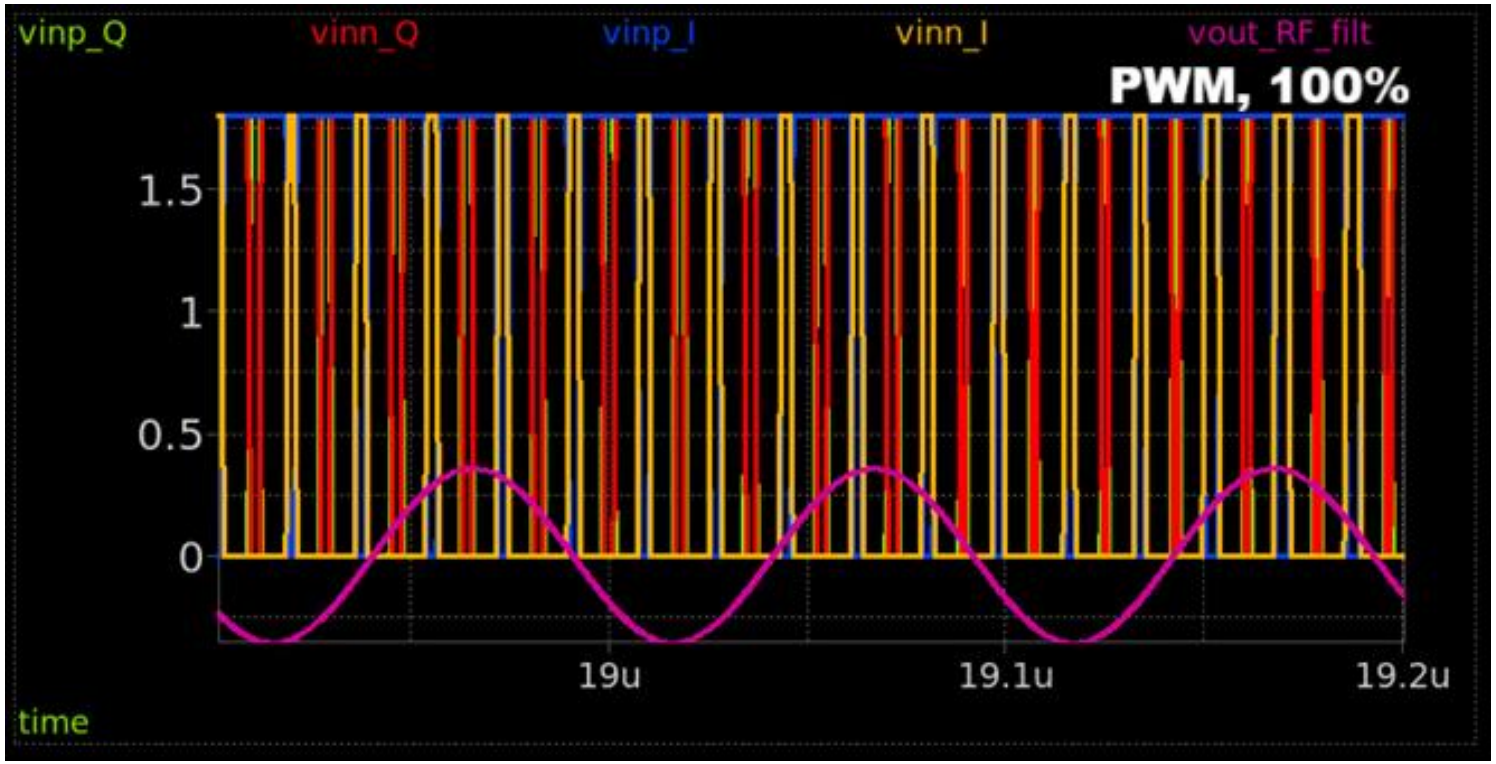

# Simulation Results

- fsig = 125kHz (worst-case), fpwm = 56MHz, flo = 10.025MHz

- PWM, 75% full-scale:

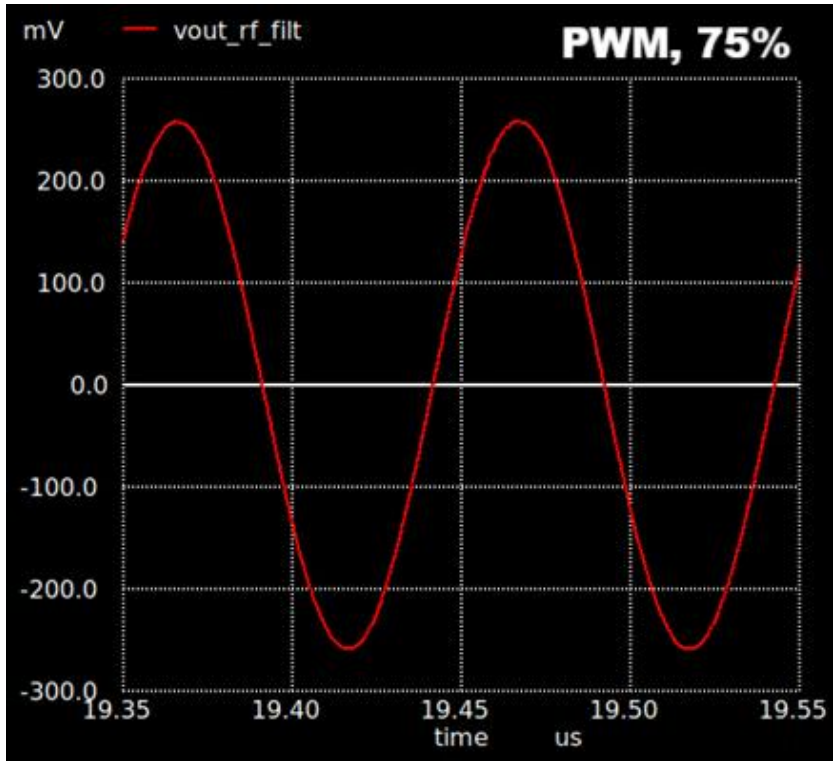


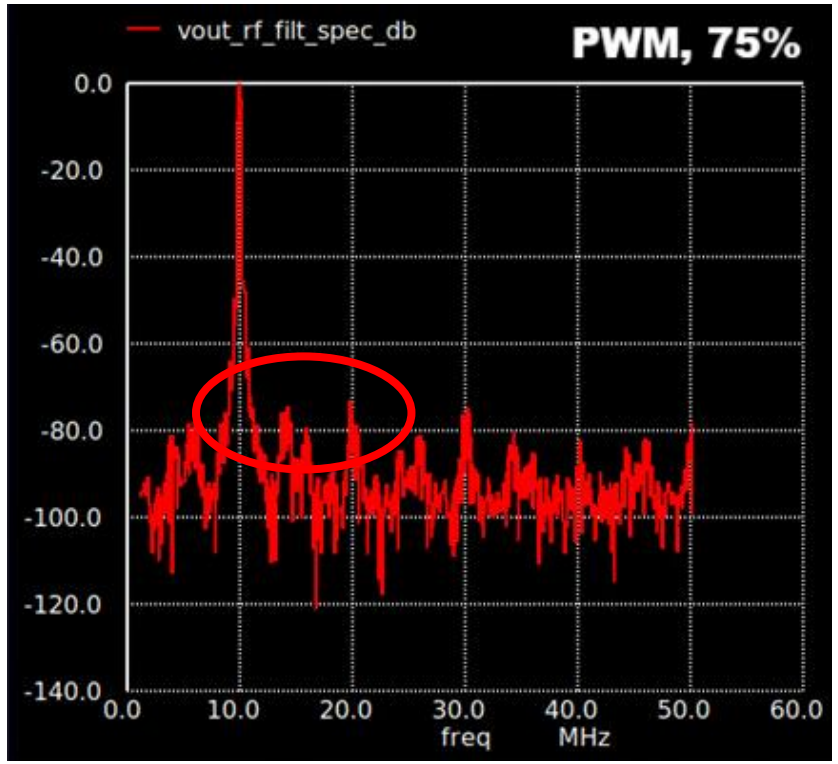

# Simulation Results

- fsig = 125kHz (worst-case), fpwm = 56MHz, flo = 10.025MHz

- PWM, 50% full-scale:

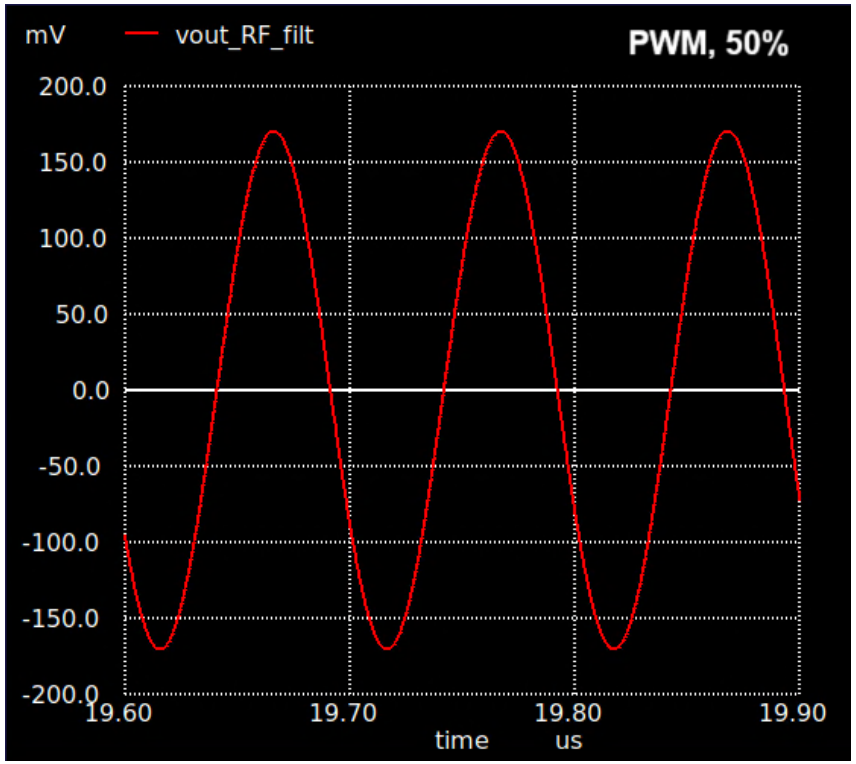


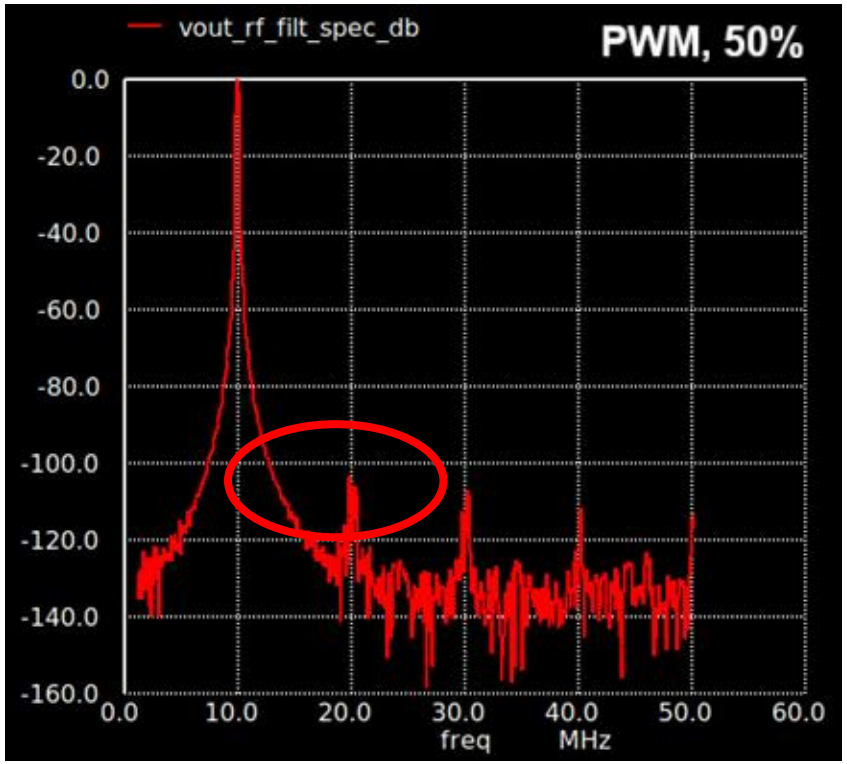

# Digital Core

# Layout – LibreLane / OpenROAD GUI

- ToDo

# Iterative CORDIC

- 10-Bit
- 10+1 Iterations
- 125kHz (worst-case)
- fs = 50MHz (later 56MHz)

# Iterative CORDIC

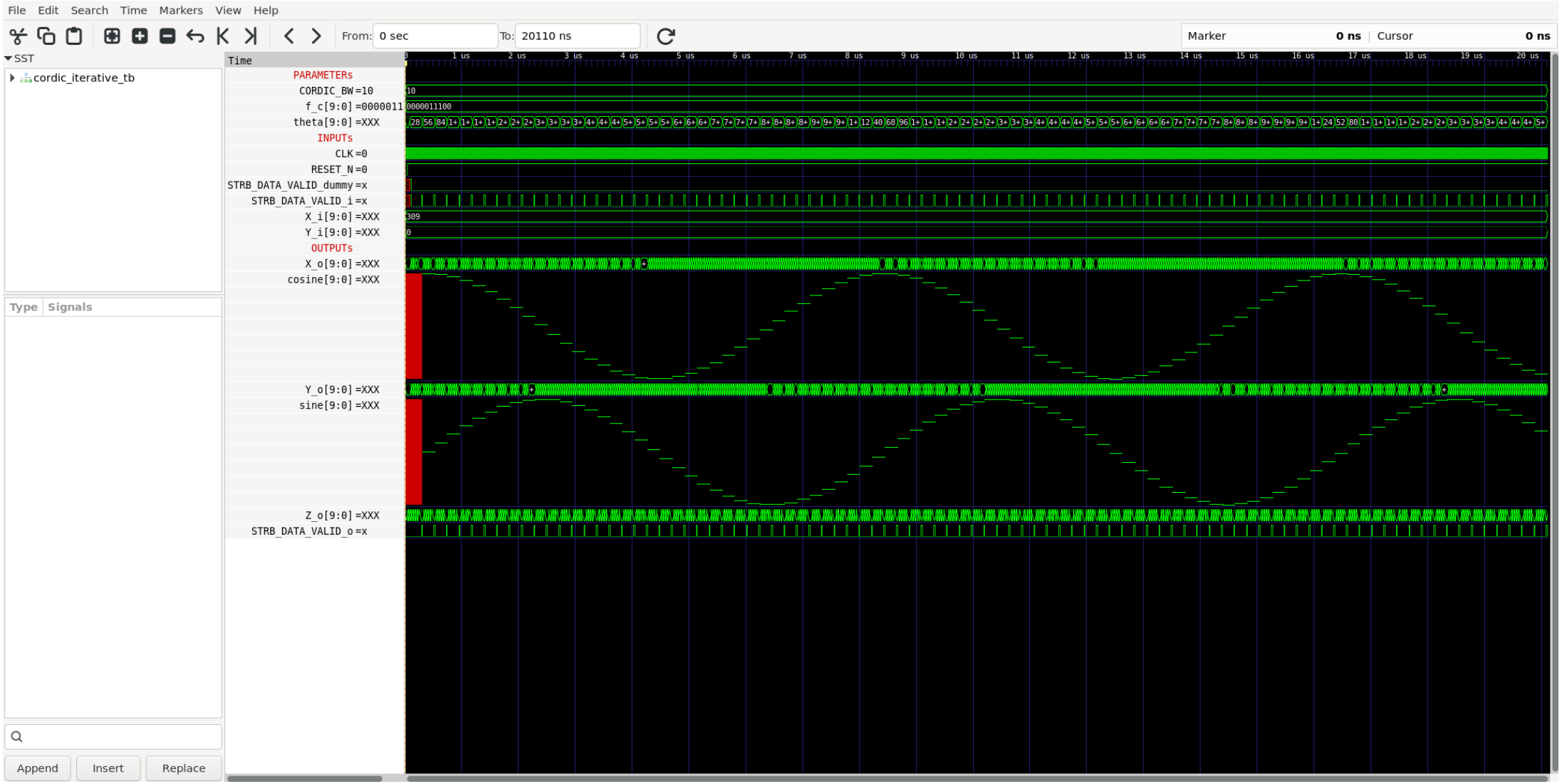

# Simulation Results

- ToDo

# WSPR Transmitter

# Schematic

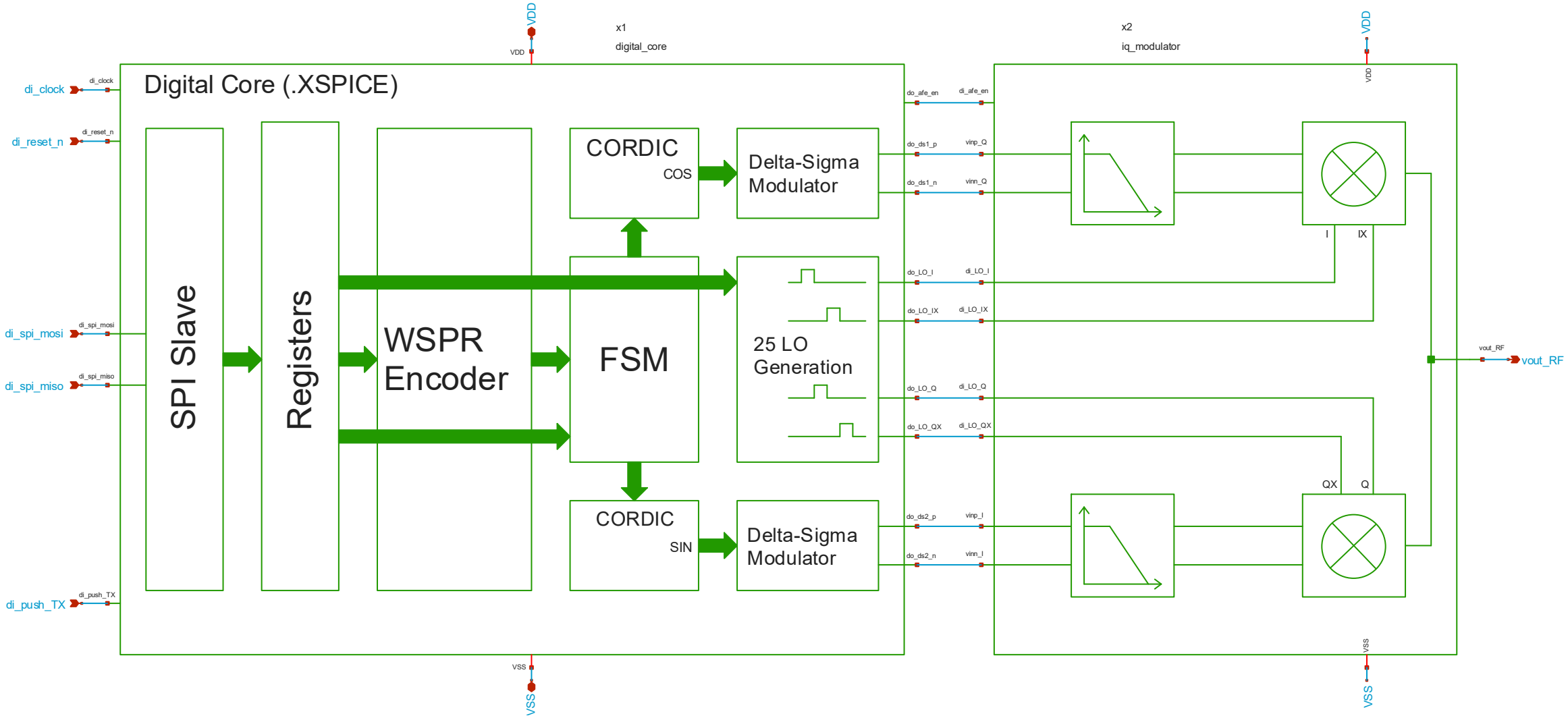
VDD
x1
digital_core
x2
iq_modulator
Digital Core (.XSPICE)
di_clock
di_reset_n
di_spi_mosi
di_spi_miso
di_push_TX
SPI Slave
Registers
WSPR Encoder
FSM
CORDIC
COS
CORDIC
SIN
Delta-Sigma Modulator
Delta-Sigma Modulator
25 LO Generation
do_afe_en
di_afe_en
do_ds1_p
vinp_Q
do_ds1_n
vinn_Q
do_LO_I
di_LO_I
do_LO_IX
di_LO_IX
do_LO_Q
di_LO_Q
do_LO_QX
di_LO_QX
do_ds2_p
vinp_I
do_ds2_n
vinn_I
I
IX
QX
Q
vout_RF
VSS

# Layout

- ToDo

# Simulation Results

- ToDo

JOHANNES KEPLER
UNIVERSITY LINZ