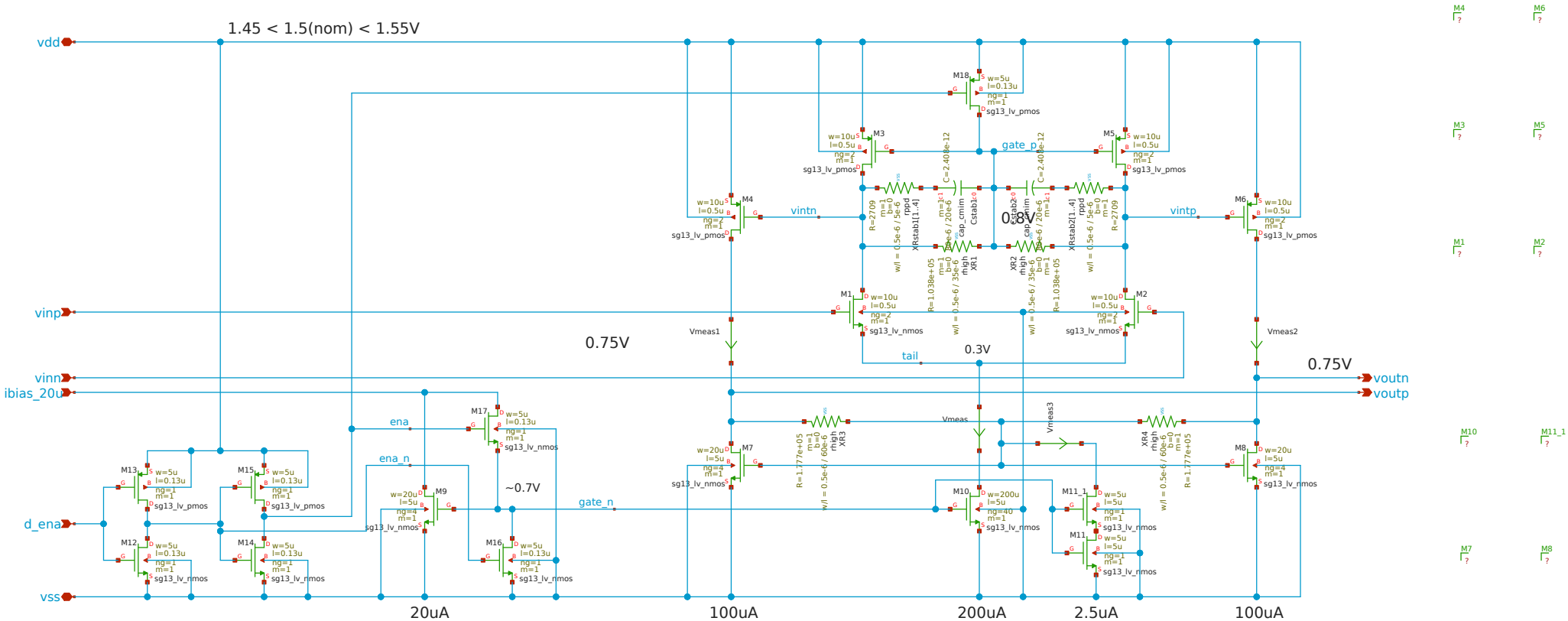

(c) 2025 Harald Pretl, Apache-2.0 license 2025-10-02 22:28:12

ota-diff.sch