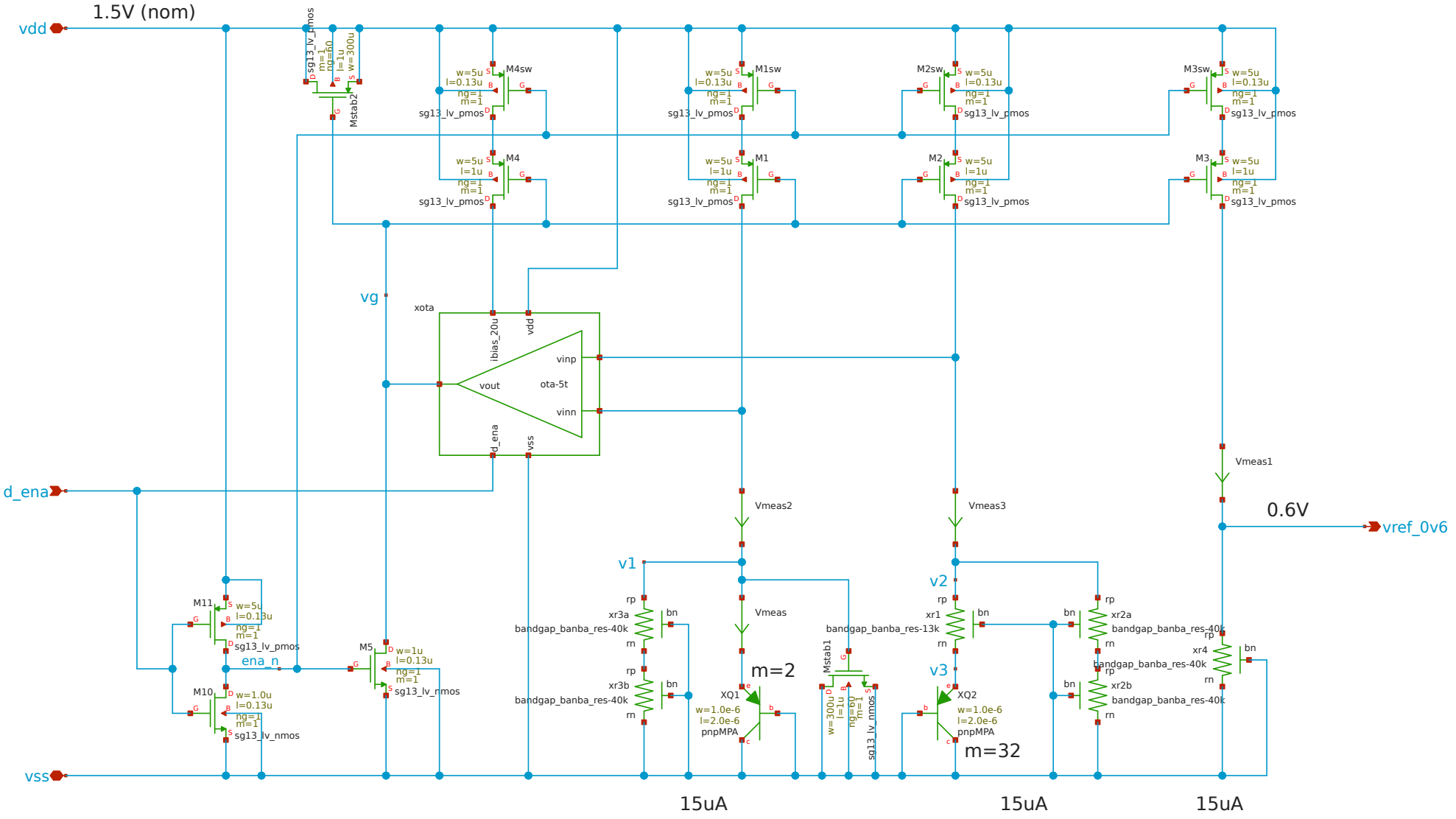

(c) 2025 Harald Pretl, Apache-2.0 license