NGSPICE

```
.param temp=27
.options savecurrents reltol=1e-3 abstol=1e-12 gmin=1e-15
.control
save all

* Operating Point Analysis
op
remzerovec
write ota-improved_tb-loopgain.raw
set appendwrite

* AC Analysis
ac dec 101 1 100G
remzerovec
write ota-improved_tb-loopgain.raw
set appendwrite

* Middlebrook's Method
let tv=-v(vrl)/v(vfl)
let ti=-i(virl)/i(vifl)
let tmb=(tv*ti - 1)/(tv + ti + 2)

plot db(tmb) ylabel 'Magnitude - Middlebrook'
plot 180/pi*cphase(tmb) ylabel 'Phase - Middlebrook'

* Tian's Method
* vtest=0, itest=1:
let A=i(Vimeas2)
let C=v(vmeas2)

* vtest=1, itest=0:
let B=i(Vimeas1)
let D=v(vmeas1)
let ttian=(A*D-B*C-A)/(2*(B*C-A*D)+A-D+1)

plot db(ttian) ylabel 'Magnitude - Tian'
plot 180/pi*cphase(ttian) ylabel 'Phase - Tian'

* Middlebrook vs. Tian
plot db(tmb) db(ttian) ylabel 'Magnitude'
plot 180/pi*cphase(tmb) 180/pi*cphase(ttian) ylabel 'Phase'

write ota-improved_tb-loopgain.raw

*quit
.endc
```

MODEL

```
.lib cornerMOSlv.lib mos_tt
.lib cornerRES.lib res_typ
```

Simulate

Annotate OP

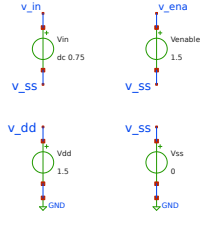

Tian's Method

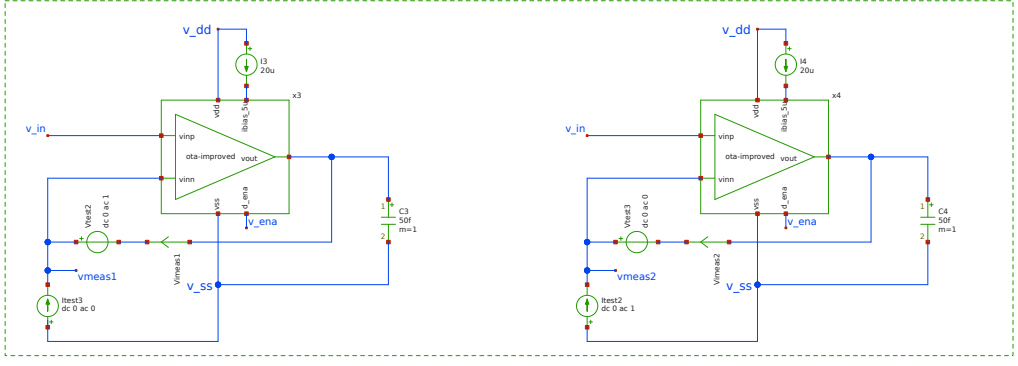

Middlebrook's Method

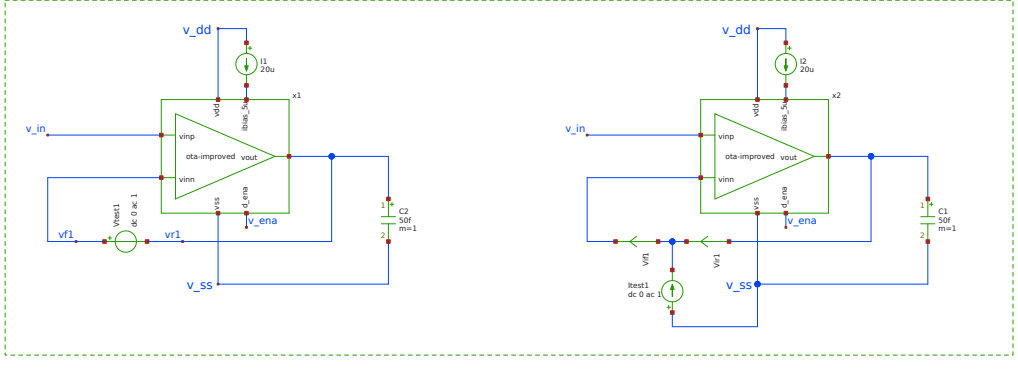

(c) 2024 H. Pretl, S. Dorrer, Apache-2.0 license