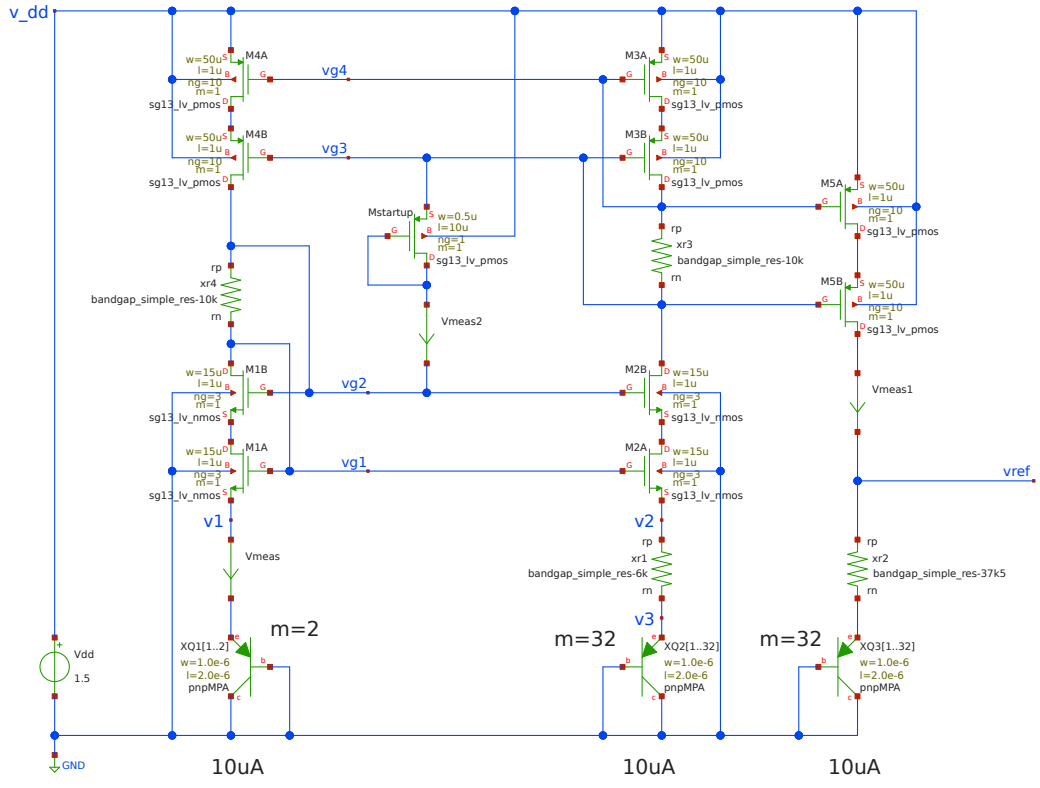

NGSPICE

```
.temp 27
.control
save all
set filetype=ascii

op
write bandgap_simple.raw

dc temp -30 125 1
set appendwrite
write bandgap_simple.raw
plot vref

wrdata bandgap_simple.txt vref
.endc
```

MODEL

```
.lib cornerMOSlv.lib mos_tt
.lib cornerHBT.lib hbt_typ
.lib cornerRES.lib res_typ
```

simulate

annotate OP

(c) 2025 H. Pretl, Apache-2.0 license