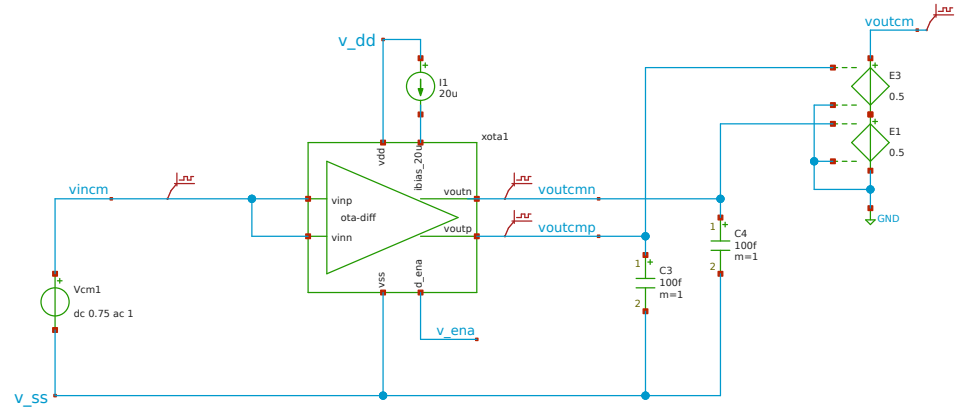

NGSPICE

```
.temp 27
.include ota-diff_tb-acol.save
.control
option sparse
set filetype=ascii
save all

op
write ota-diff_tb-acol.raw
set appendwrite

ac dec 101 1k 10G
write ota-diff_tb-acol.raw
plot 20*log10(vout)
plot cph(vout)*180/pi
plot 20*log10(voutcm)
plot cph(voutcm)*180/pi

.endc
```

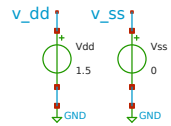

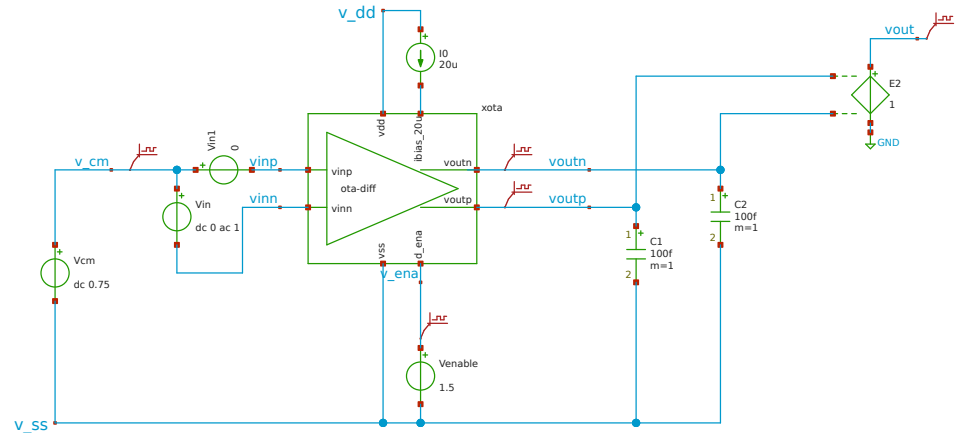

MODEL

```
.lib cornerMOSlv.lib mos_tt
.lib cornerRES.lib res_typ
.lib cornerCAP.lib cap_typ
```

simulate

annotate OP