ZONE	REV	DATE	DESCRIPTION	NAME
ALL	A	6/10/2021	INITIAL RELEASE	David Pedraza

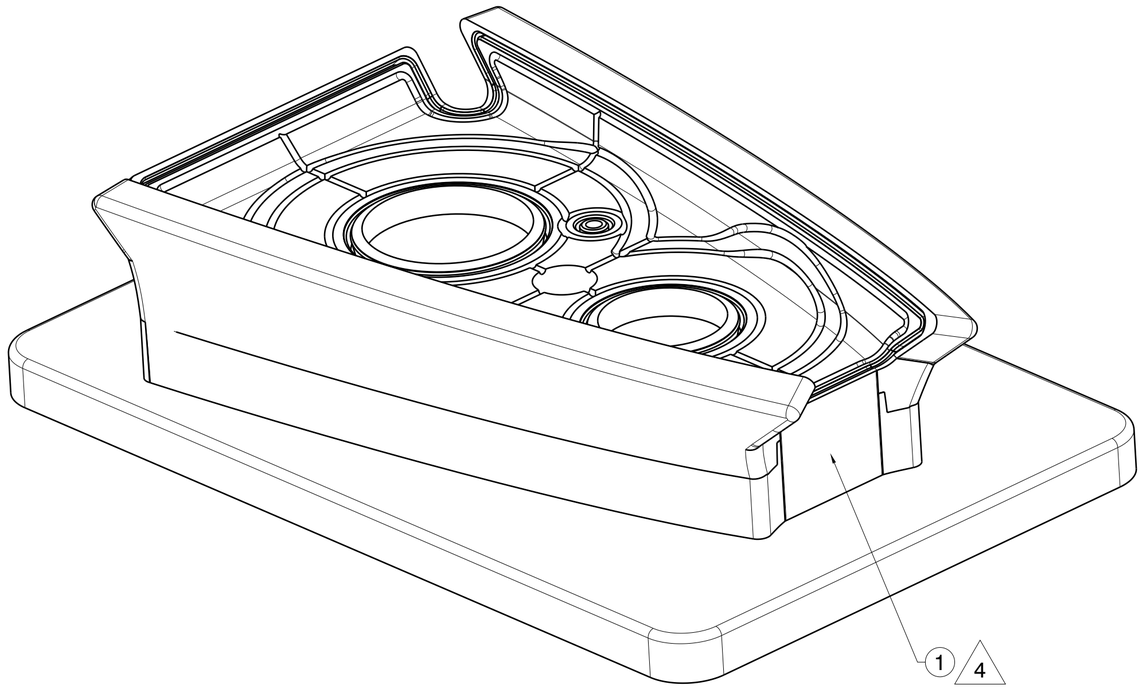

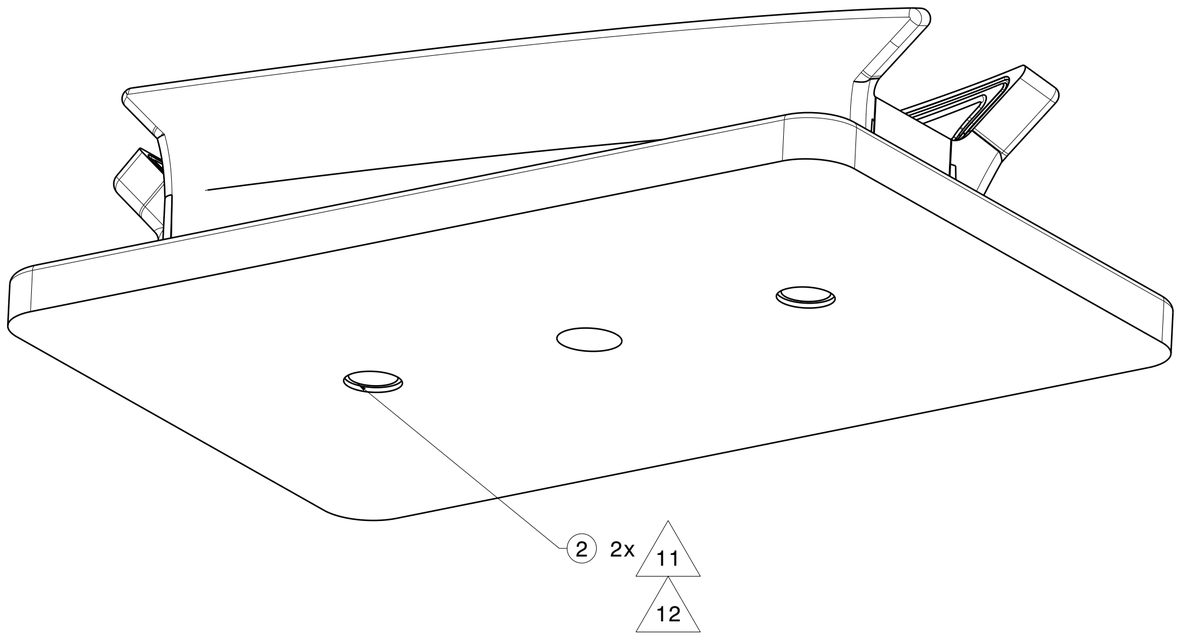

NOTES:

1. 3D DATA IS THE MASTER, FOR ALL DIMENSIONS NOT SHOWN
2. TOOL FUNCTION: TAIL RIB 1.5, LHS, CNC VACUUM TRIM FIXTURE
3. ESTIMATED TOOL WEIGHT: 2 KG
4. MATERIAL: NYLON 12 AF
5. FINISH: NONE
6. TOOL IDENTIFICATION: INSTALL JOBY TOOL TAG T501289-150 A.1, APPROX AS SHOWN
7. SEAL MADE FROM RECTANGULAR CROSS SECTION 1/16" X 9/32" MAGNA-LOCK SEAL. MAGNA-LOCK PART # 363000-OR
8. INSPECT TOOL BETWEEN 66/70°F (20/22°C)
9. DEBURR ALL SHARP EDGES, CORNERS AND THREADS
10. UNLESS OTHERWISE STATED, BUSHINGS AND THREAD INSERTS MUST NOT SIT PROUD OF THE ADJACENT SURFACE ONCE INSTALLED. THE TOP OF THE HARDWARE MUST SIT FLUSH OR UP TO 0.70 MM BELOW THE ADJACENT SURFACE
11. BULLNOSED BUSHING PART NUMBER H-8 FROM HARCOURT IS AN APPROVED ALTERNATIVE
12. BULLNOSED BUSHING PART NUMBER HL-48-12 FROM HARCOURT IS AN APPROVED ALTERNATIVE

ITEM NO.	PART NUMBER	DESCRIPTION	SUPPLIER	QTY
4	94209A455	SCREW, THREAD FORMING, 2-56 THREAD, 1/4" LONG	MCMASTER-CARR	2
3	T501289-150	TOOL TAG, T150, 1.00" X 2.00"	-	1
2	CL-B-11000	BUSHING,BULLNOSED ,1/2"ID X .751"OD X1/2" LONG	CARR-LANE	2
1	T200158-001-T1-101	TAIL RIB 1.5, FWD, LHS, CNC VACUUM TRIM FIXTURE	STRATASYS	1

UNLESS OTHERWISE SPECIFIED DIMENSIONS AND TOLERANCES IN MM. DIMENSION INTERPRETED PER ASME Y14.5-2018 AND DRAWING INTERPRETED PER ASME Y14.100-2017

DECIMAL TOLERANCE:	ANGULAR TOLERANCE:	SURFACE TEXTURE:
X ±1 X.X ±0.5 X.XX ±0.25	X ±1° X.X ±0.5°	3.2 µm

THIRD ANGLE PROJECTION

Joby AVIATION

THIS DOCUMENT CONTAINS CONFIDENTIAL AND PROPRIETARY INFORMATION OF JOBY AERO, INC. ANY UNAUTHORIZED USE, DISSEMINATION OR OTHER TRANSFER OF THIS DOCUMENT OR THE INFORMATION CONTAINED HEREIN IS STRICTLY PROHIBITED.

NOMENCLATURE: TAIL RIB 1.5, FWD, LHS, CNC VACUUM TRIM FIXTURE

SIZE	CAGE CODE	PART NO	REV
A2	6VX14	T200158-001-T1	A

SCALE: NONE

SHEET 1 OF 1

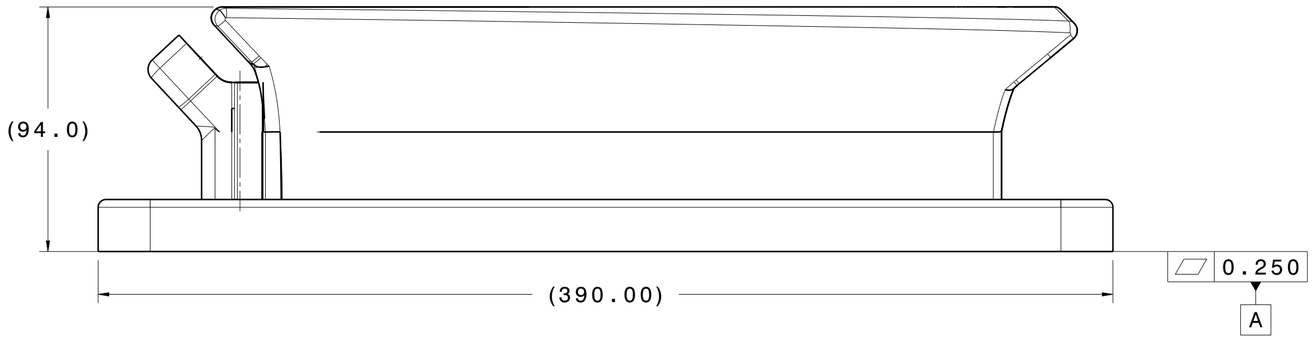

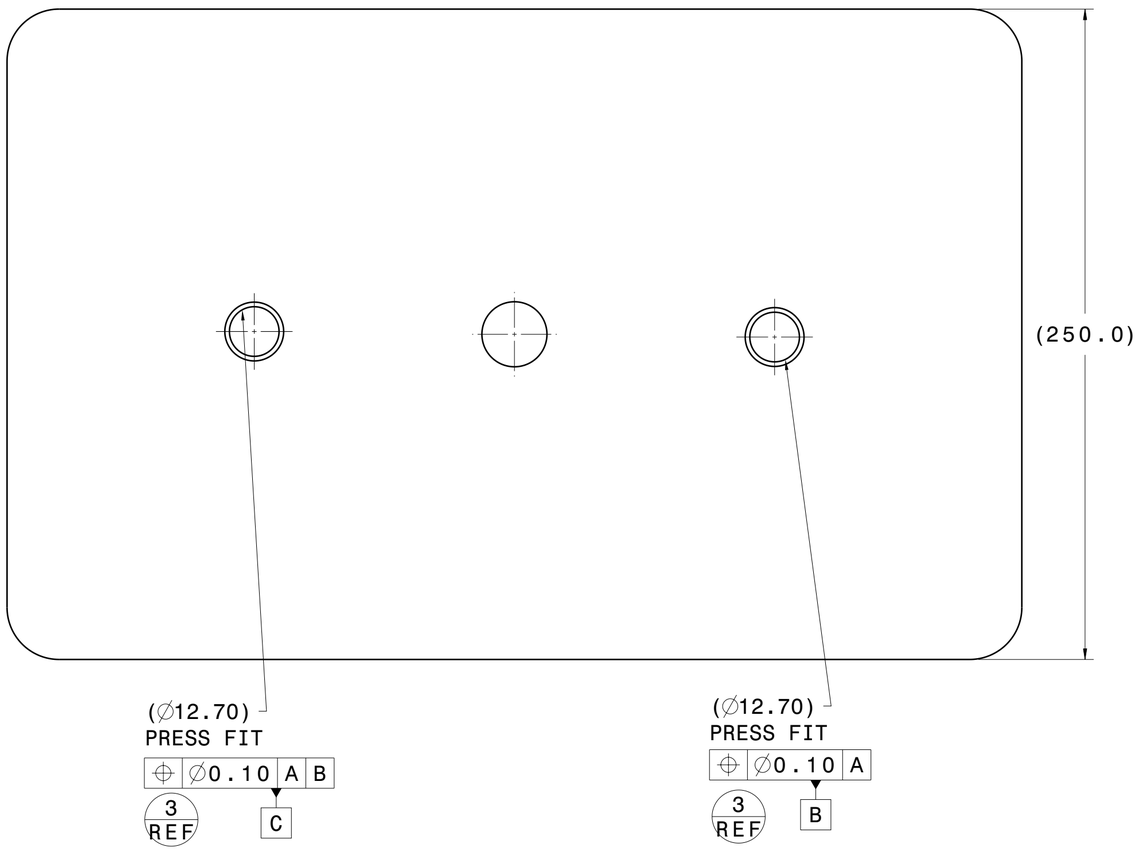

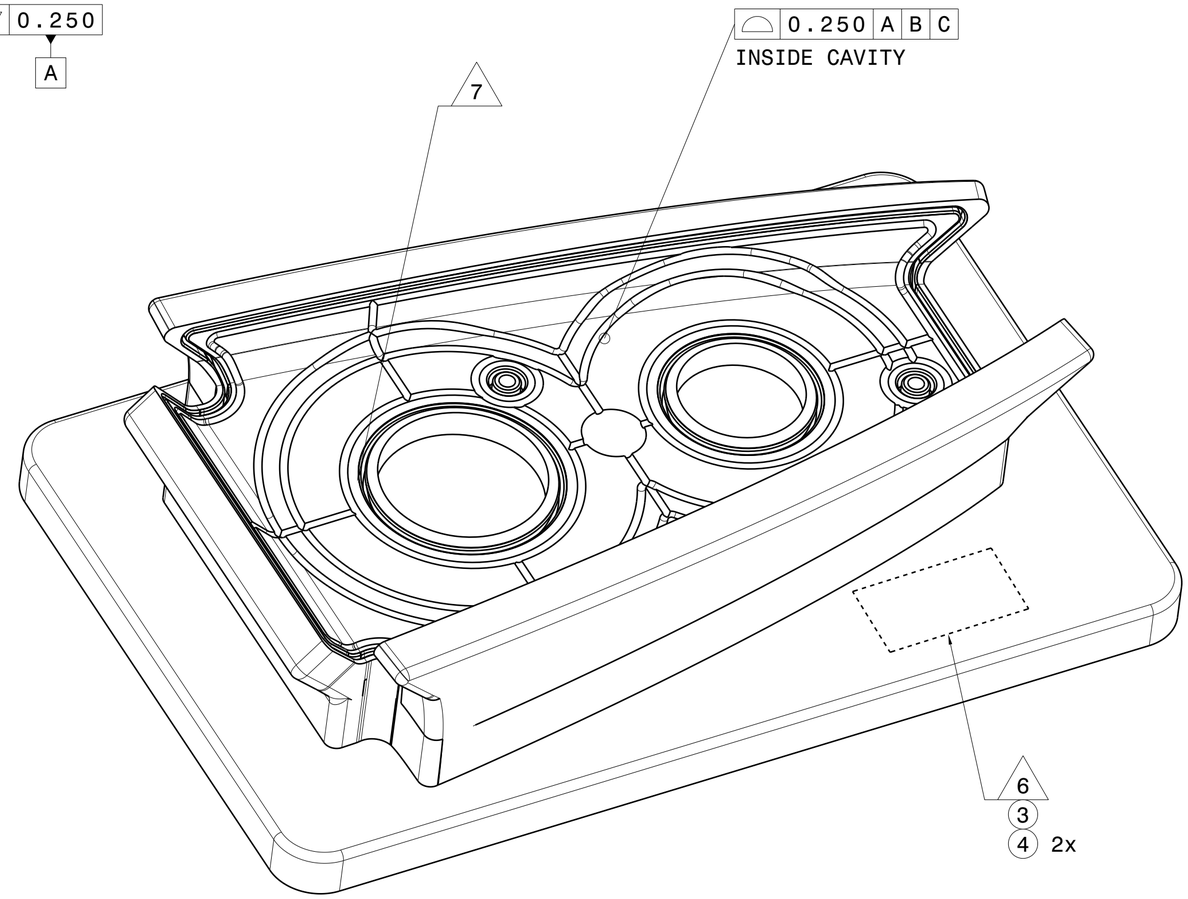

-001 SHOWN/-002 OPPOSITE

UNLESS OTHERWISE SPECIFIED DIMENSIONS AND TOLERANCES IN MM. DIMENSION INTERPRETED PER ASME Y14.5-2018 AND DRAWING INTERPRETED PER ASME Y14.100-2017

DECIMAL TOLERANCE:	ANGULAR TOLERANCE:	SURFACE TEXTURE:
X ±1 X.X ±0.5 X.XX ±0.25	X ±1° X.X ±0.5°	3.2 μm

THIRD ANGLE PROJECTION

Joby AVIATION

THIS DOCUMENT CONTAINS CONFIDENTIAL AND PROPRIETARY INFORMATION OF JOBY AERO, INC. ANY UNAUTHORIZED USE, DISSEMINATION OR OTHER TRANSFER OF THIS DOCUMENT OR THE INFORMATION CONTAINED HEREIN IS STRICTLY PROHIBITED.

NOMENCLATURE

TAIL RIB 1.5, FWD, LHS, CNC VACUUM TRIM FIXTURE

SIZE	CAGE CODE	PART NO	REV
A2	6VX14	T200158-001-T1	A

SCALE: | SHEET 1 OF 1