Bike Frame Design Project

MAE 3150

Due on May 5, 2026

Isabel Chang, ijc35

Introduction

Brief Overview of Project

This final design project is centered around designing an electric bicycle frame that is suitable for wide deployment in bike share programs such as Ithaca Bikeshare and for purchase by the general public. The bike frame should be lightweight, safe, durable, inexpensive, and easy to use and integrate with other components. We will achieve these characteristics by first designing a general bike frame and analyzing its performance in Ansys, and then updating the frame geometry to reduce weight and include the battery weight and analyzing the new geometry in Ansys.

Societal Impact

Designing an electric bicycle frame that is suitable for wide deployment in bike-share programs can positively impact public health, the environment, local economies, and human welfare. Having more accessible bikes encourages residents to choose cycling over driving for shorter trips, promoting physical activity and also reducing a resident's carbon footprint. Accessible bike-share systems can also support local economies by making it easier for riders to stop at small businesses as they cycle through the city, rather than traveling only between planned destinations by car. Using bike-share systems as transportation is also much more affordable than owning a car, making transportation more accessible to all citizens. More bikers rather than drivers would also potentially reduce traffic congestion during rush hours in cities.

Analysis of Provided Geometry

Mathematical Model (shells)

Apply essential boundary conditions by constraining the appropriate displacements.

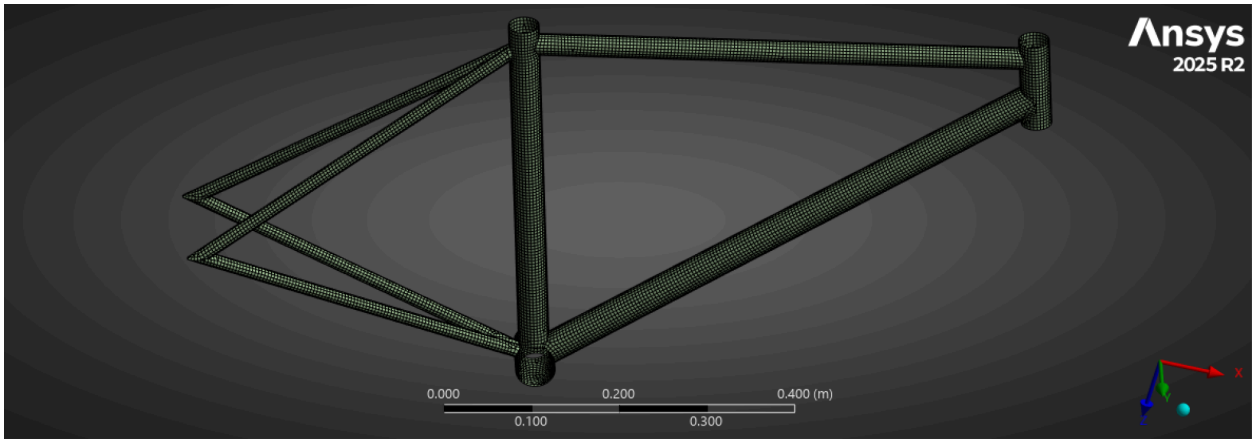

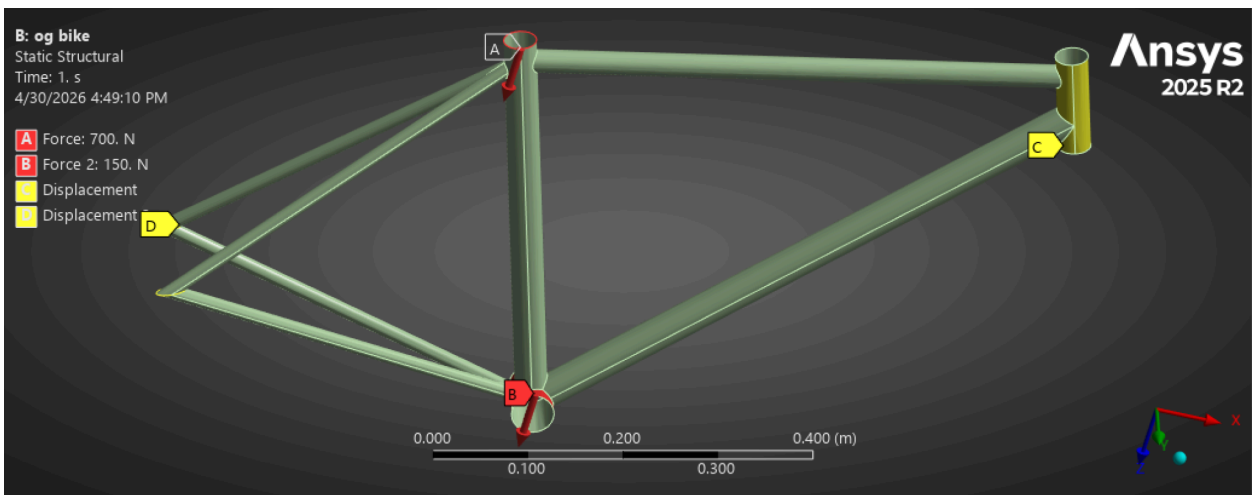

Numerical Solution Strategy

Get the Ansys FE solver to generate algebraic equations corresponding to our mathematical model and solve the algebraic equations to determine the degrees of freedom.

The image above in the “Mathematical Model” section shows the essential boundary conditions on the frame and the forces applied. The rightmost tube and leftmost parts of the bike frame is fixed with no x, y, z, displacement.

Potential Energy Minimization:

$\pi = W_{int} - W_{ext}$

$W_{int} = \int \frac{1}{2} E (\frac{du}{dx})^2 A dx$

$W_{ext} = F*u$

Find u(x) to minimize PE

Mesh statistics:

Statistics	
Nodes	16775
Elements	16795

Total Number of DOF: 16775(6) = 100650 DOF

$[d] = [\ u_x\ ,\ \theta_x,\ u_y,\ \theta_y,\ u_z,\ \theta_z\ ]$

The nodes on the fixed selections have known DOF equal to [0] from essential boundary conditions. Ansys will solve [Total # of DOF] - [Known DOF from essential boundary conditions] equations to determine the remaining DOFs.

Ansys Implementation and Results

Displacement Contours:

These displacement contours look reasonable because the max deformation is very small (0.11mm) and the essential boundary conditions are satisfied. There is no deformation at the fixed boundaries.

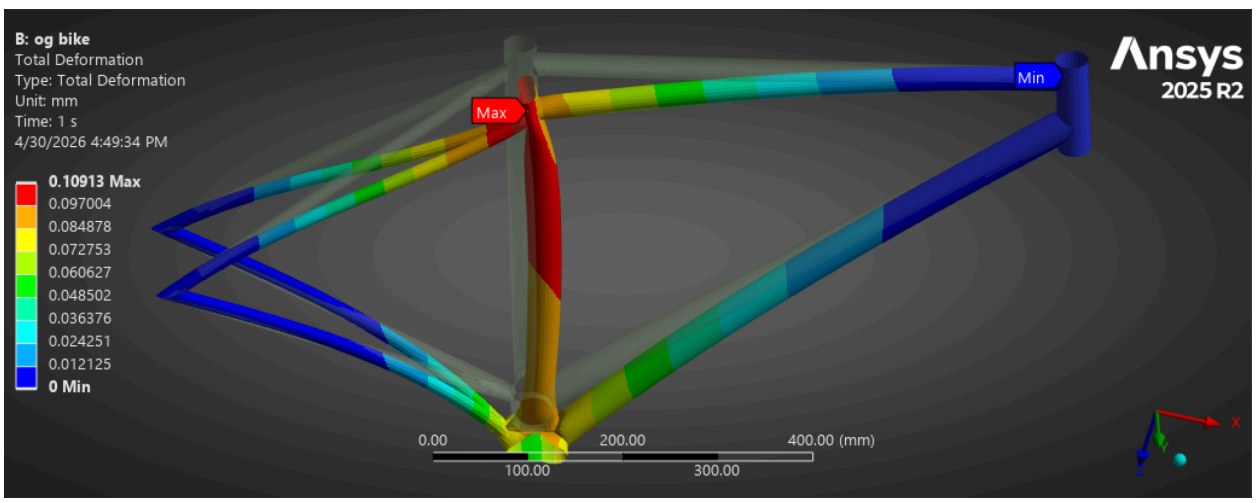

Equivalent Stress Contours:

The highest stress occurs at the lowest tube of the frame which connects to the pedals.

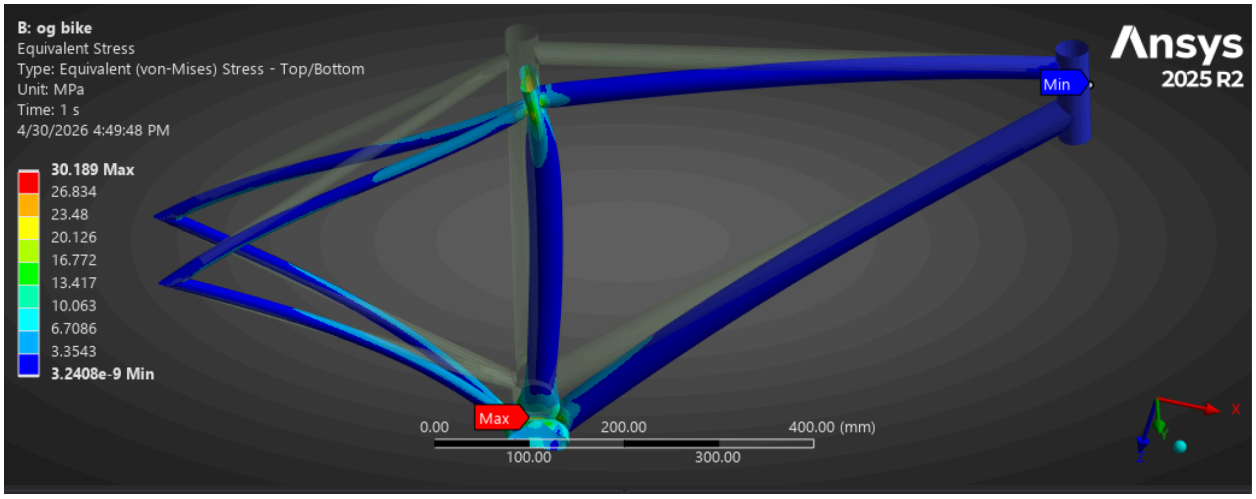

Safety Factor Contours:
We see that most areas of the bike frame have a safety factor of 15. The area with the lowest safety factor is located on the bottom tube of the frame, which is also where the highest stress occurs.

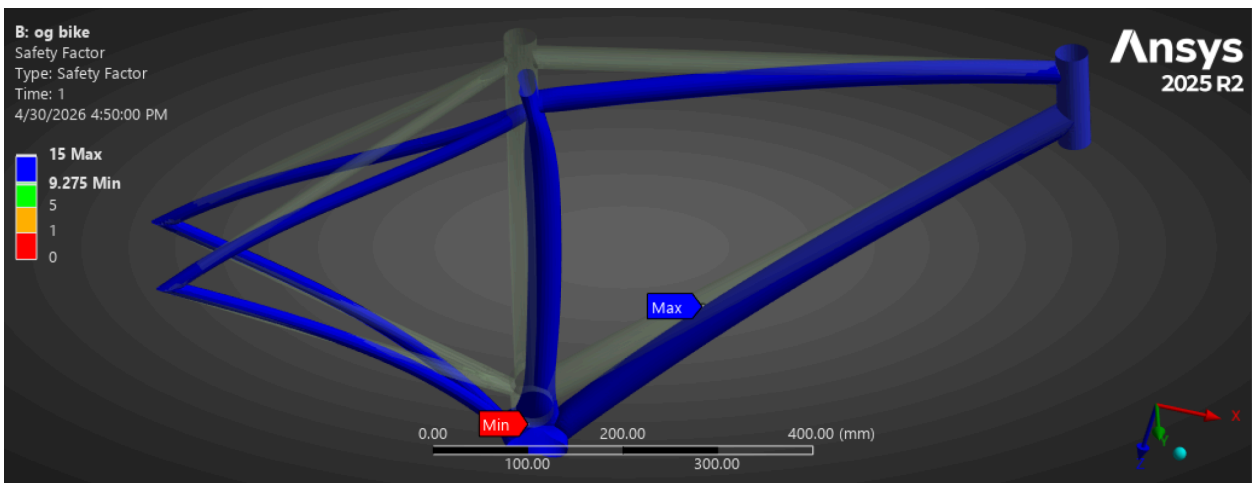

Verification
Increasing mesh sizing from 4mm to 2mm.

New Mesh:

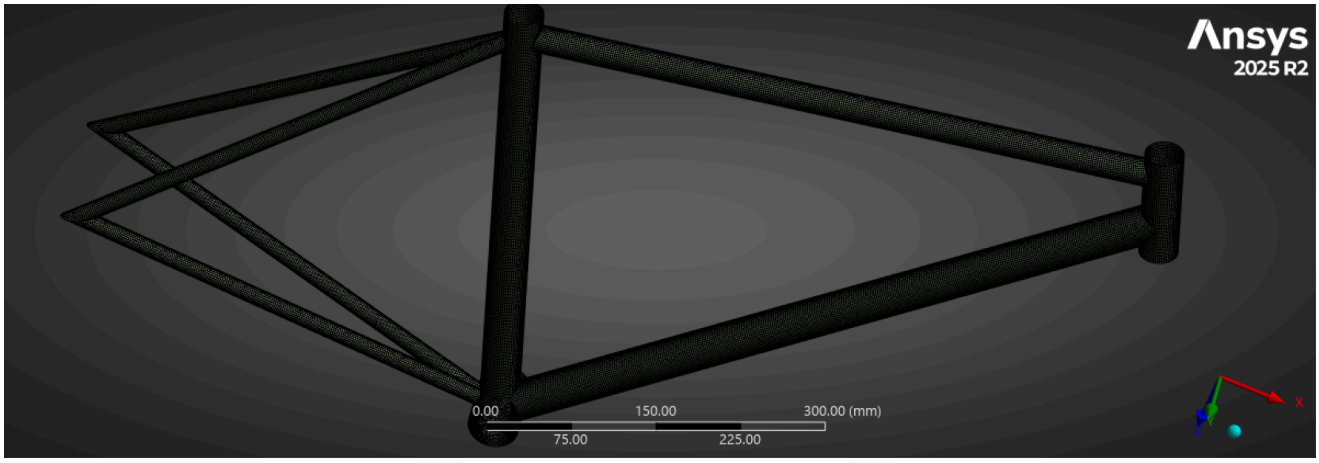

New mesh statistics:

Statistics	
Nodes	64783
Elements	64821

We see that the model now has 64783(6) = 388698 total DOF, a large increase from 100650 total DOF when using 4mm size mesh.

Displacement Contours:
Percent difference between 2mm and 4mm element size:
(0.11004 - .10913)/.11004 = 0.0083*100% = 0.83% difference between max deformation.
Deformation has converged, less than 5% difference between old and new mesh sizes.

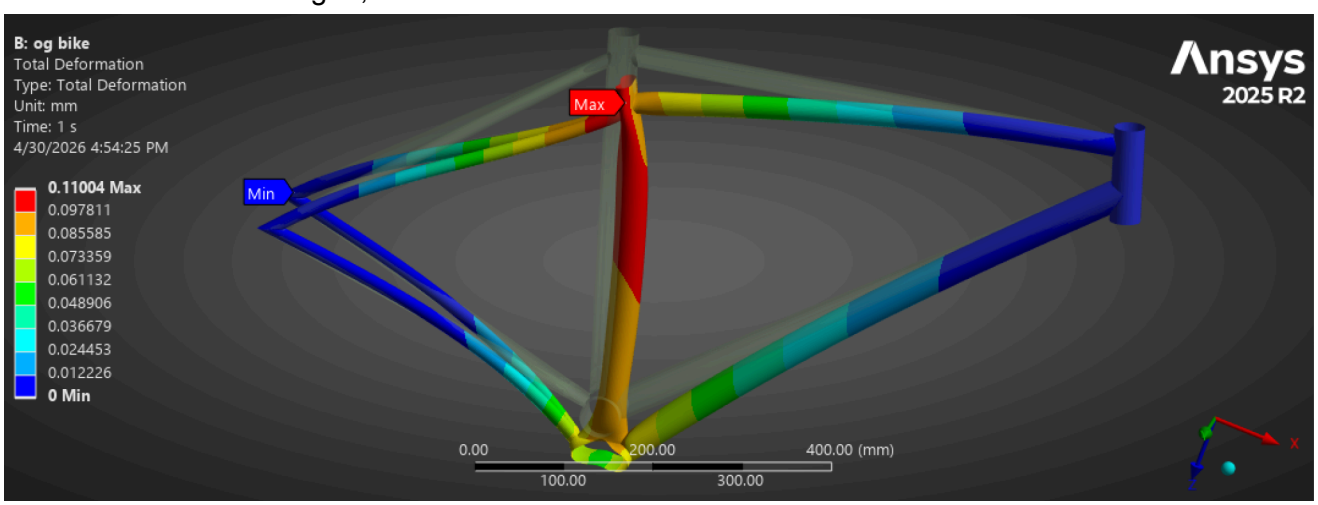

Equivalent Stress Contours:
Percent difference between 2mm and 4mm element size:
(38.069-30.189)/38.069 = 0.207*100% = 20.7% difference
Equivalent stress has not converged, greater than 5% difference between old and new mesh sizes.

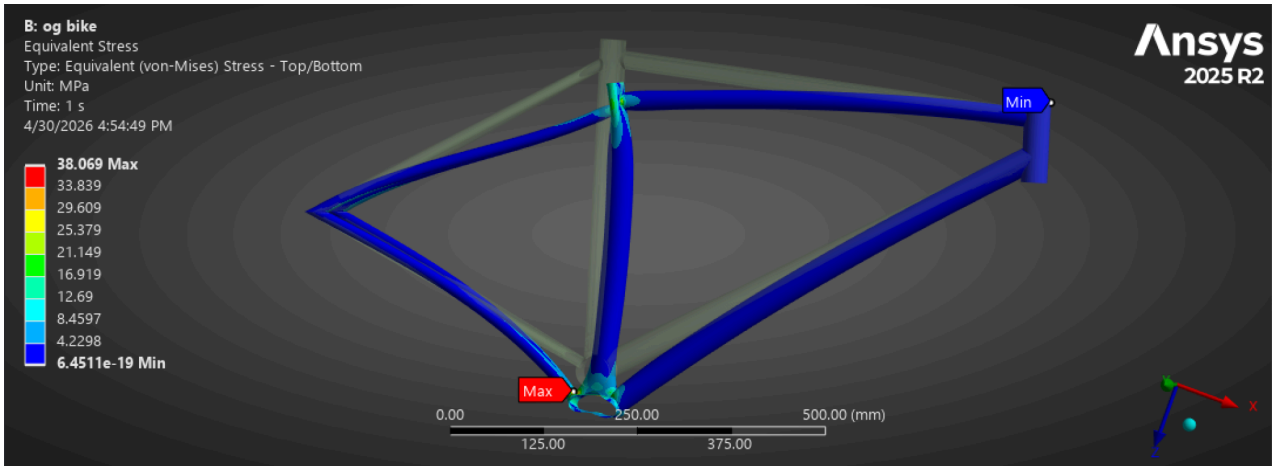

Safety Factor Contours:
Safety factor contours have the maximum and minimum values when comparing 2mm and 4mm element size meshes.

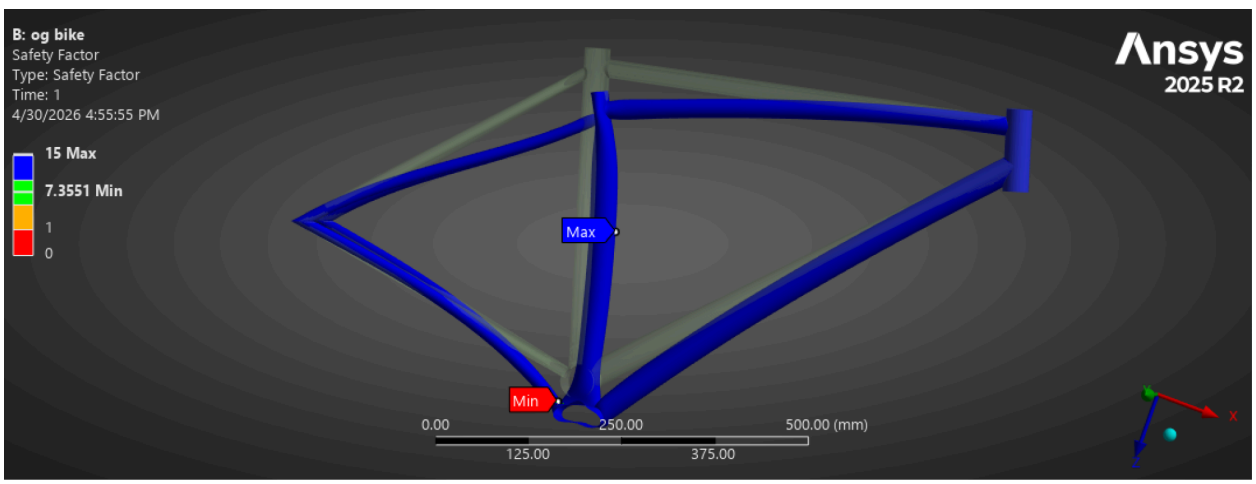

New Design

Geometry

The updated geometry no longer includes the top tube and also has an added battery weight on the rightmost horizontal tube.

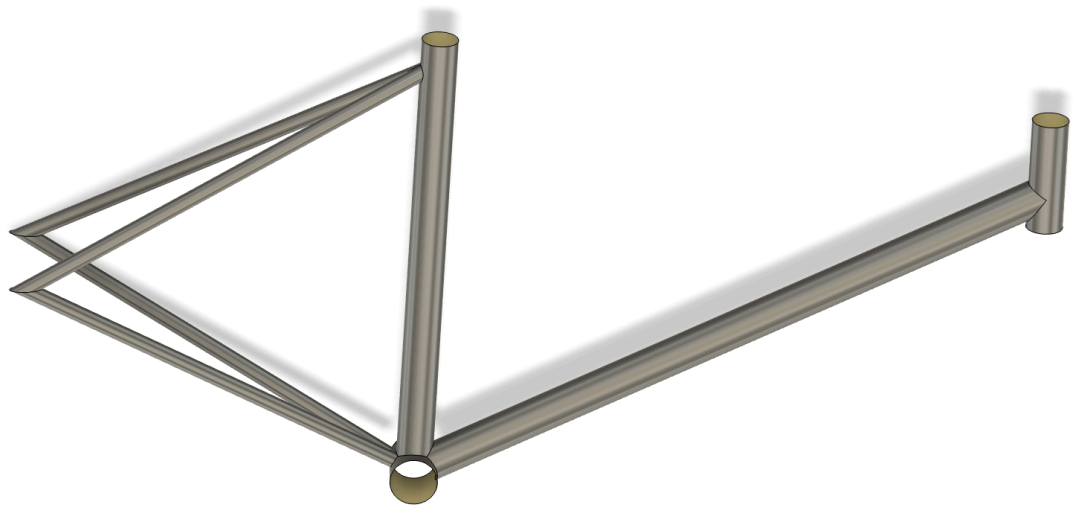

Ansys Implementation and Results

Displacement Contours:
This deformation is significantly different from the original geometry deformation. There is much more deformation at the top vertical tube.
Percent difference: (0.16494-.10913)/0.16494 = 0.338*100% = 33.8% difference
The deformation is reasonable because the max value is still quite small (0.16494 mm) and the essential boundary conditions are satisfied with no deformation at the fixed boundaries.

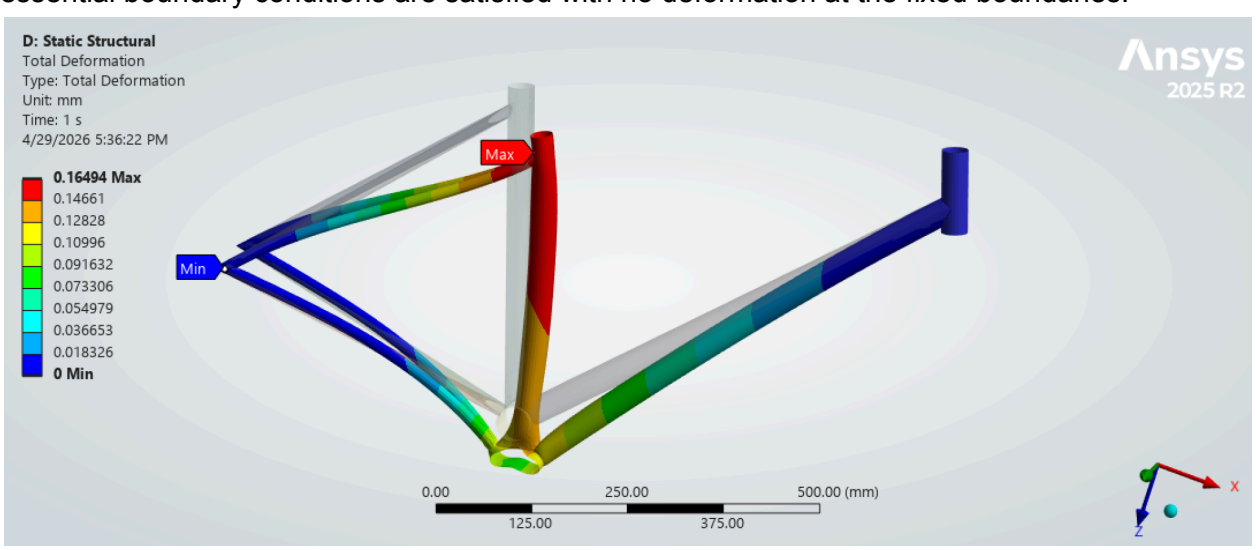

Equivalent Stress Contours:
The highest stress still occurs at the bottom tube where the pedals attach, even with the new geometry. There is significantly more stress with this new geometry.

Percent difference: (62.694 - 30.189)/62.694 = 0.518*100% = 51.8% difference

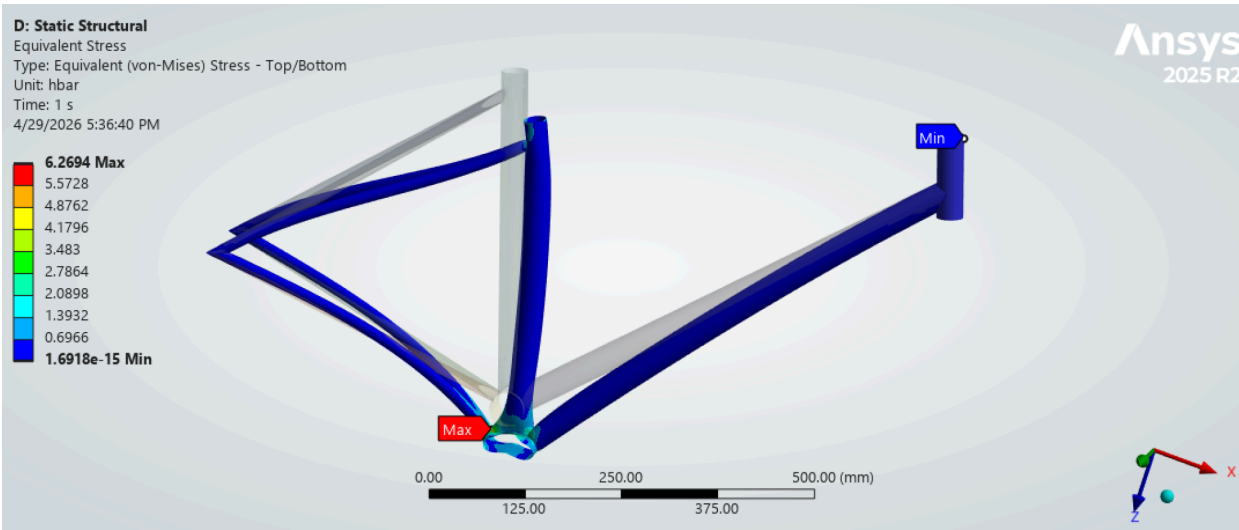

Safety Factor Contours:

The safety factor contours of the new geometry look very similar to the original geometry safety factor contours. The minimum still occurs at the bottom tube, exactly where equivalent stress is at the highest value.

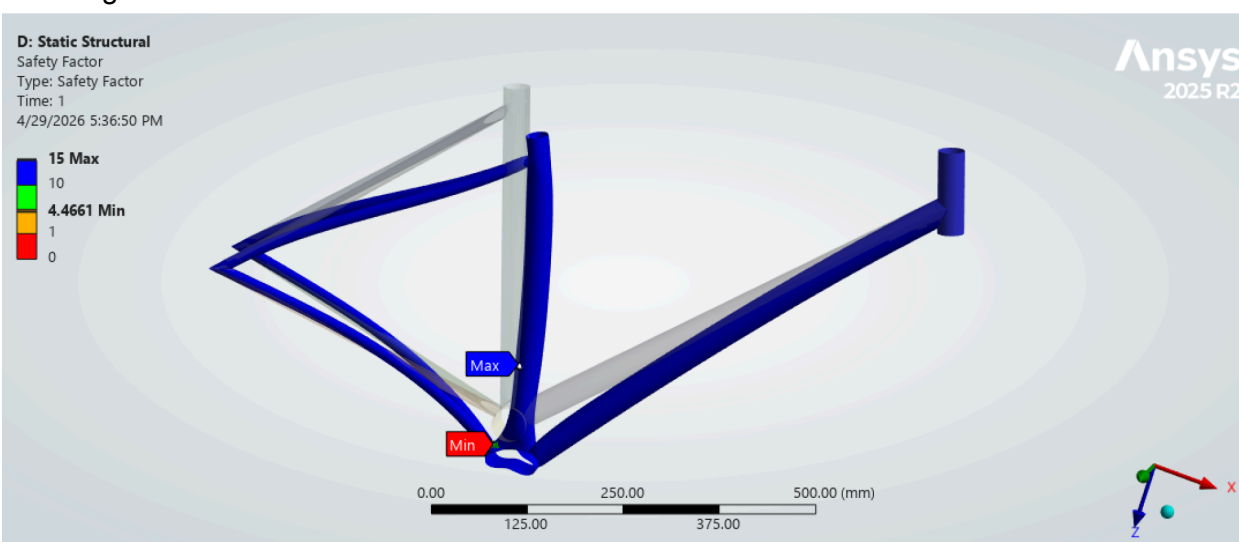

Parametric Optimization

I chose to optimize the horizontal tube with the applied battery weight. It is the tube highlighted in blue below. The thickness of the tube can likely be decreased due to the high safety factor along that tube and also the low stress values, as shown in the analysis above.

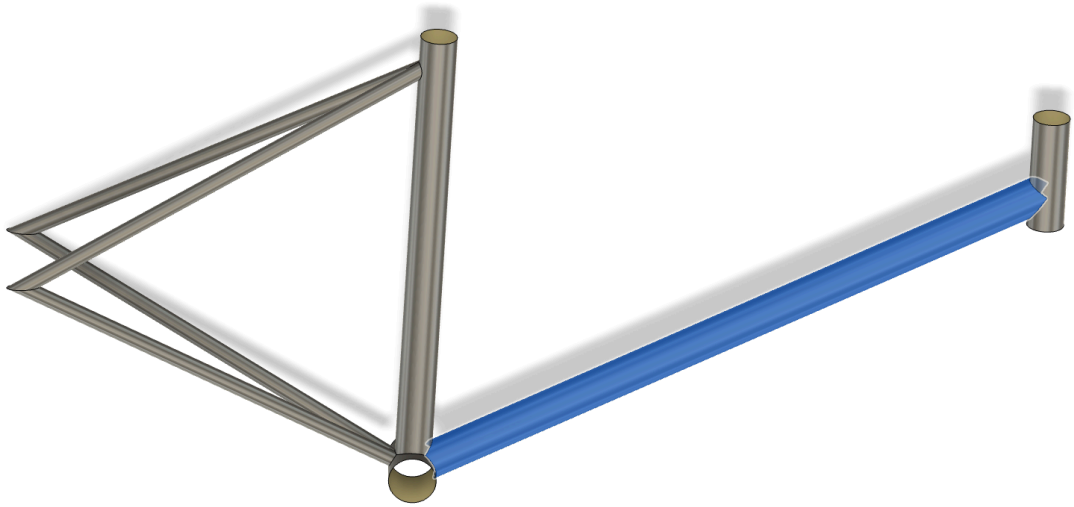

Objective: Minimize mass of highlighted tube on bike frame
Design variable: Tube thickness
Constraints: Safety factor ≥ 2, thickness between 2-4mm

Table of Outline A5: Design Points of Design of Experiments

	A	B	C	D
1	Name	P4 - Body30 Thickness (mm)	P6 - Body30 Mass (decatonne)	P7 - Safety Factor Minimum
2	1	3	5.7429E-05	4.5335
3	2 DP 0	2	3.8286E-05	4.4661
4	3	4	7.6572E-05	4.5905
5	4	2.5	4.7858E-05	4.501
6	5	3.5	6.7001E-05	4.5632

Table of Outline A10: Min-Max Search

	A	B	C	D
1	Name	P4 - Body30 Thickness (mm)	P6 - Body30 Mass (decatonne)	P7 - Safety Factor Minimum
2	Output Parameter Minimums			
3	P6 - Body30 Mass	2	**3.8286E-05**	4.4661
4	P7 - Safety Factor Minimum	2	3.8286E-05	**4.4661**
5	Output Parameter Maximums			
6	P6 - Body30 Mass	4	**7.6572E-05**	4.5905
7	P7 - Safety Factor Minimum	4	7.6572E-05	**4.5905**

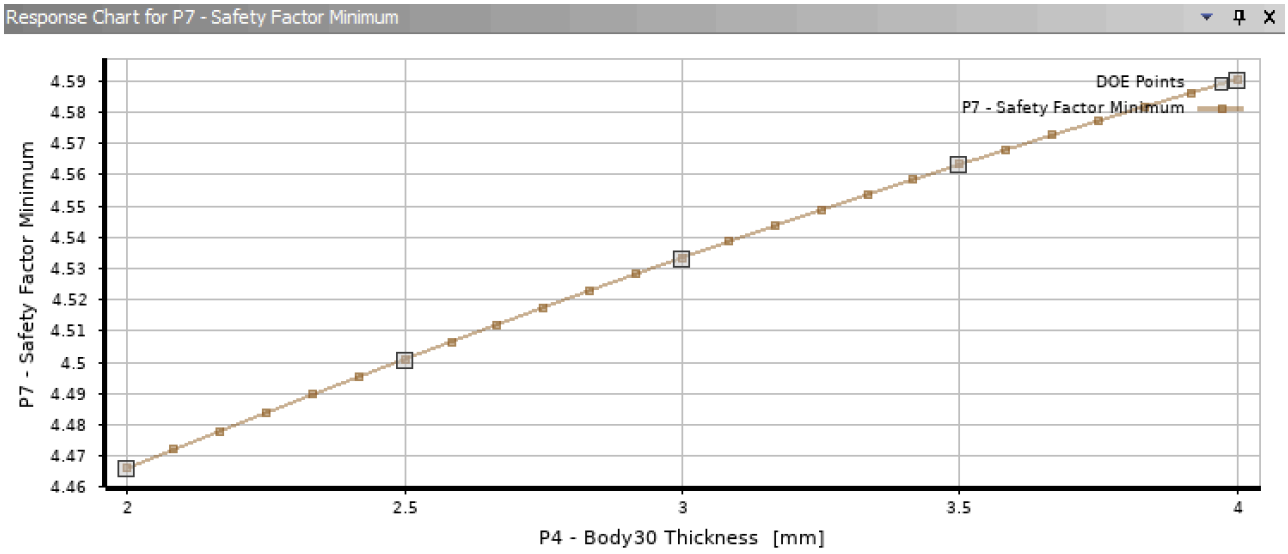

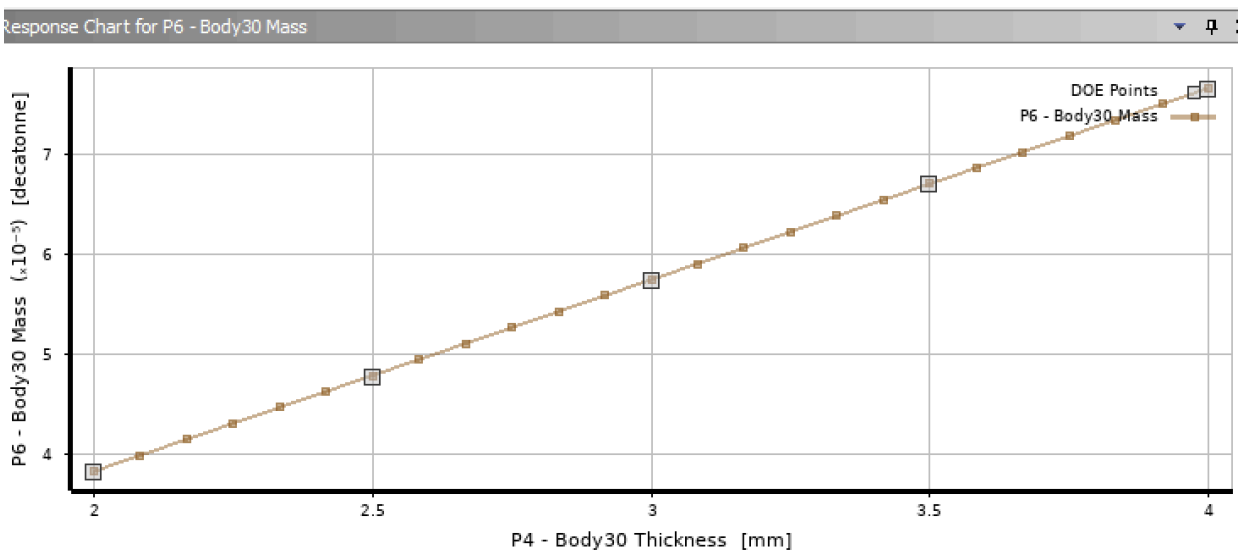

Optimization:

Table of Schematic E4: Optimization , Candidate Points

	A	B	C	D	E	F	G
1	Reference	Name	P4 - Body30 Thickness (mm)	P6 - Body30 Mass (decatonne)		P7 - Safety Factor Minimum	
2				Parameter Value	Variation from Reference	Parameter Value	Variation from Reference
3	◉	Candidate Point 1	2.0005	3.8295E-05	0.00%	4.4662	0.00%
4	○	Candidate Point 2	2.0007	3.83E-05	0.01%	4.4662	0.00%
5	○	Candidate Point 3	2.0011	3.8307E-05	0.03%	4.4662	0.00%
*		*New Custom Candidate Point*	*3*				

Table of Outline A16: Verification Points

	A	B	C	D
1	Name	P4 - Body30 Thickness (mm)	P6 - Body30 Mass (decatonne)	P7 - Safety Factor Minimum
2	1	2.0011	3.8307E-05	4.4662
*	New Verification Point			

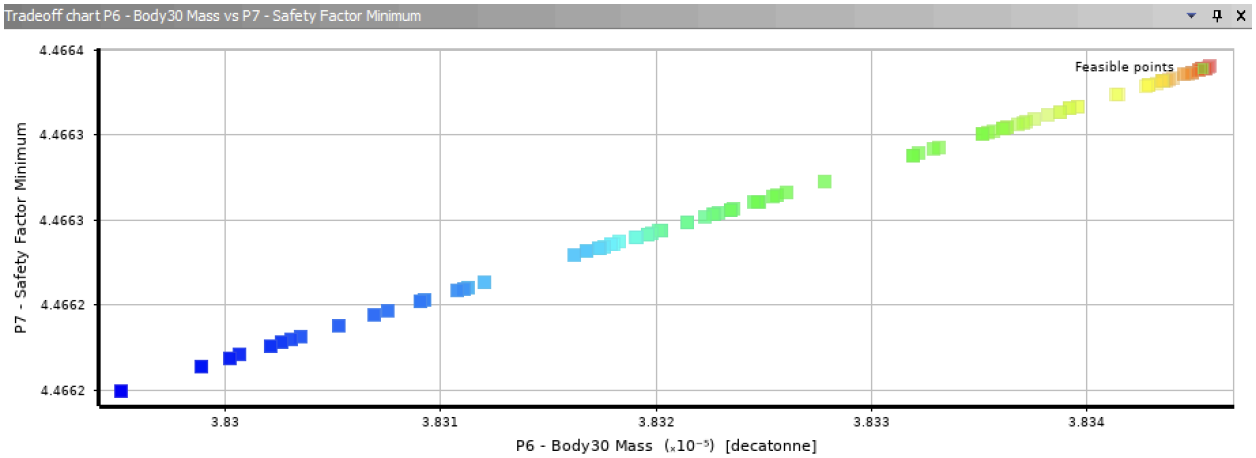

Reflection

Learnings

Through this project I learned how to apply parametric optimization to specific parts of a simulation to optimize specific features such as mass. This is an incredibly useful tool to know because in many applications such as in vehicle or aerospace engineering, the goal is to minimize the mass of the part while ensuring it meets structural requirements. I also learned how to surface model in fusion and then how to modify that geometry in Space Claim while CADing the bike frame. In many other classes with CAD we used typical 3D modeling techniques, so this project introduced a new way to model semi-complex geometry.

Challenges

The greatest challenge I ran into while completing this project was completing the parametric optimization of my chosen tube. This was new material to me because we had not practiced this before in a simulation submission or challenge problem earlier in the class. I found it difficult to complete and was slower to understand the setup of it in Ansys Workbench. However I am very glad that I was introduced to this tool and will apply it in future projects.

Appendix

Summary of Ansys Cross-talk:

Creating a numerical simulation from a physical model takes several steps. The first step to approaching an engineering problem is identifying what problem you are trying to solve. Knowing the objective is crucial because it decides what parts of the full assembly are included in the simulation. Once the objective is known, you can choose the correct analysis type to use such as Static Structural. In the geometry step in Space Claim, simplify the model as much as possible to reduce the complexity of the part and make analysis easier. This can be done by getting rid of unnecessary parts or fillets. Using joints in Ansys Mechanical provides an idealized version of part kinematics and reduces the number of degrees of freedom. Inserting beam connections rather than using bolts in a model simplifies the mesh and reduces degrees of freedom. Boundary conditions should represent the constraints applied on the modeled part by surrounding parts not included in the simulation. Users should consider how these excluded parts interact with the model to accurately represent the real system. Finally, choosing the correct material model to use depends on the objective of the simulation.