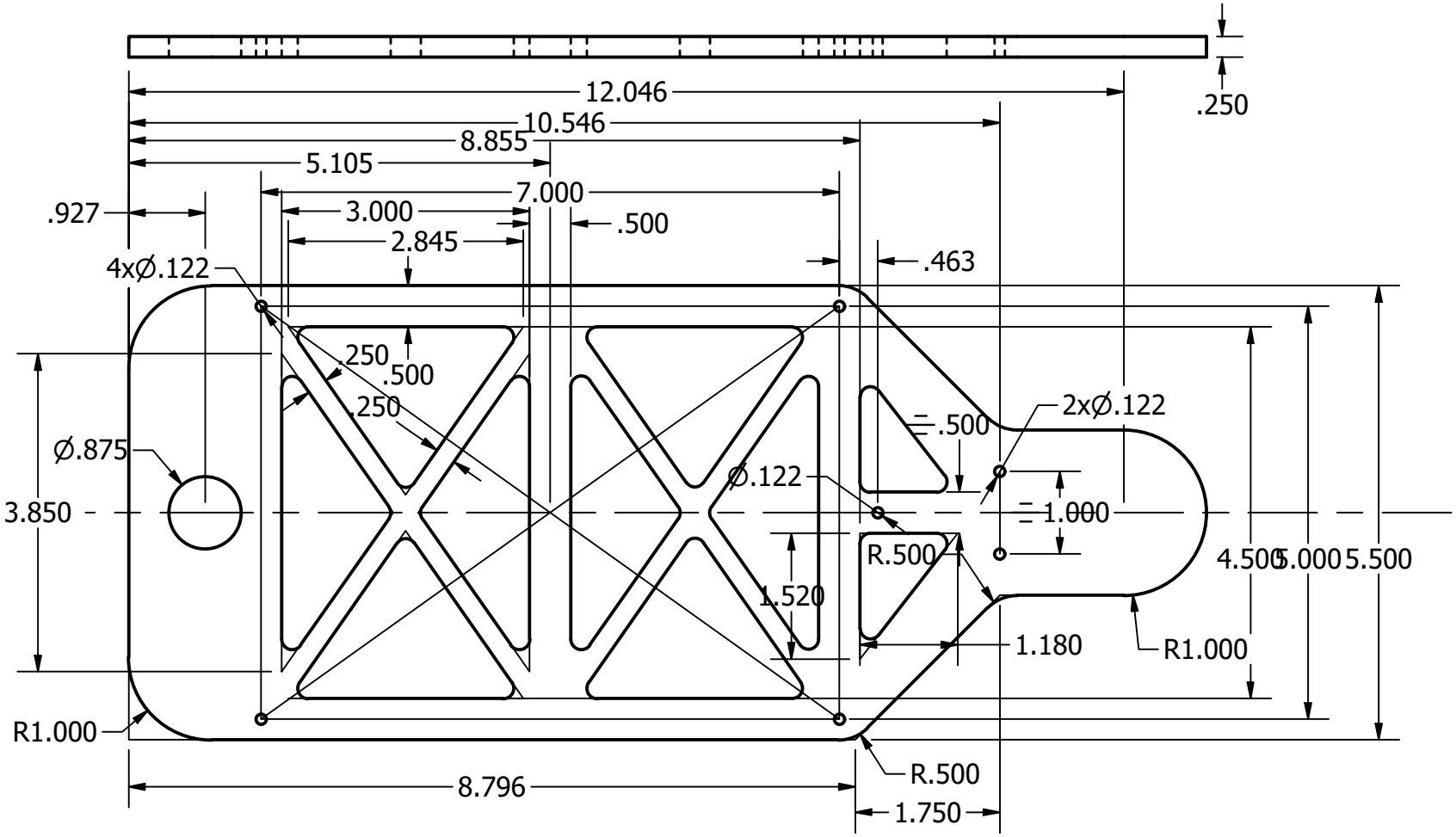

DRAWN Yichen Wang	6/5/2019	ALL DIMENSIONS IN INCHES UNLESS STATED
CHECKED		
QA		TITLE
MFG		Top Chassis Plate
APPROVED		
		SIZE A / DWG NO B3 / REV
		SCALE 1 / 2 / SHEET 1 OF 1